MITSUBISHI ELECTRIC

General-Purpose AC Servo

MITSUBISHI SERVO AMPLIFIERS & MOTORS

MELSERVO-J4

SSCNET Ⅲ/H Interface AC Servo

MODEL

MR-J4-_B(-RJ)
MR-J4-_B4(-RJ)
MR-J4-_B1(-RJ)

SERVO AMPLIFIER
INSTRUCTION MANUAL

G

● Safety Instructions ●

Please read the instructions carefully before using the equipment.

To use the equipment correctly, do not attempt to install, operate, maintain, or inspect the equipment until you have read through this Instruction Manual, Installation guide, and appended documents carefully. Do not use the equipment until you have a full knowledge of the equipment, safety information and instructions.
In this Instruction Manual, the safety instruction levels are classified into "WARNING" and "CAUTION".

⚠ WARNING	Indicates that incorrect handling may cause hazardous conditions, resulting in death or severe injury.
⚠ CAUTION	Indicates that incorrect handling may cause hazardous conditions, resulting in medium or slight injury to personnel or may cause physical damage.

Note that the CAUTION level may lead to a serious consequence according to conditions.
Please follow the instructions of both levels because they are important to personnel safety.
What must not be done and what must be done are indicated by the following diagrammatic symbols.

⃠	Indicates what must not be done. For example, "No Fire" is indicated by ⃠ .
●	Indicates what must be done. For example, grounding is indicated by ⏚ .

In this Instruction Manual, instructions at a lower level than the above, instructions for other functions, and so on are classified into "POINT".
After reading this Instruction Manual, keep it accessible to the operator.

1. To prevent electric shock, note the following

⚠ WARNING

- Before wiring and inspections, turn off the power and wait for 15 minutes or more until the charge lamp turns off. Then, confirm that the voltage between P+ and N- is safe with a voltage tester and others. Otherwise, an electric shock may occur. In addition, when confirming whether the charge lamp is off or not, always confirm it from the front of the servo amplifier.
- Ground the servo amplifier and servo motor securely.
- Any person who is involved in wiring and inspection should be fully competent to do the work.
- Do not attempt to wire the servo amplifier and servo motor until they have been installed. Otherwise, it may cause an electric shock.
- Do not operate switches with wet hands. Otherwise, it may cause an electric shock.
- The cables should not be damaged, stressed, loaded, or pinched. Otherwise, it may cause an electric shock.
- During power-on or operation, do not open the front cover of the servo amplifier. Otherwise, it may cause an electric shock.
- Do not operate the servo amplifier with the front cover removed. High-voltage terminals and charging area are exposed and you may get an electric shock.
- Except for wiring and periodic inspection, do not remove the front cover of the servo amplifier even if the power is off. The servo amplifier is charged and you may get an electric shock.
- To prevent an electric shock, always connect the protective earth (PE) terminal (marked ⏚) of the servo amplifier to the protective earth (PE) of the cabinet.
- When using a residual current device (RCD), select the type B.
- To avoid an electric shock, insulate the connections of the power supply terminals.

2. To prevent fire, note the following

⚠ CAUTION

- Install the servo amplifier, servo motor, and regenerative resistor on incombustible material. Installing it directly or close to combustibles will lead to a fire.
- Always connect a magnetic contactor between the power supply and the main circuit power supply (L1, L2, and L3) of the servo amplifier, in order to configure a circuit that shuts down the power supply on the side of the servo amplifier's power supply. If a magnetic contactor is not connected, continuous flow of a large current may cause a fire when the servo amplifier malfunctions.
- When using the regenerative resistor, switch power off with the alarm signal. Not doing so may cause a fire when a regenerative transistor malfunctions or the like may overheat the regenerative resistor.
- Provide adequate protection to prevent screws and other conductive matter, oil and other combustible matter from entering the servo amplifier and servo motor.
- Always connect a molded-case circuit breaker to the power supply of the servo amplifier.

3. To prevent injury, note the following

⚠ CAUTION

- Only the voltage specified in the Instruction Manual should be applied to each terminal. Otherwise, a burst, damage, etc. may occur.
- Connect cables to the correct terminals. Otherwise, a burst, damage, etc. may occur.
- Ensure that polarity (+/-) is correct. Otherwise, a burst, damage, etc. may occur.
- The servo amplifier heat sink, regenerative resistor, servo motor, etc. may be hot while power is on or for some time after power-off. Take safety measures, e.g. provide covers, to prevent accidental contact of hands and parts (cables, etc.) with them.

4. Additional instructions

The following instructions should also be fully noted. Incorrect handling may cause a fault, injury, electric shock, etc.

(1) Transportation and installation

⚠ CAUTION

- Transport the products correctly according to their mass.
- Stacking in excess of the specified number of product packages is not allowed.
- Do not hold the front cover when transporting the servo amplifier. Otherwise, it may drop.
- Install the servo amplifier and the servo motor in a load-bearing place in accordance with the Instruction Manual.
- Do not get on or put heavy load on the equipment.
- The equipment must be installed in the specified direction.
- Leave specified clearances between the servo amplifier and the cabinet walls or other equipment.
- Do not install or operate the servo amplifier and servo motor which have been damaged or have any parts missing.
- Do not block the intake and exhaust areas of the servo amplifier. Otherwise, it may cause a malfunction.
- Do not drop or strike the servo amplifier and servo motor. Isolate them from all impact loads.
- When you keep or use the equipment, please fulfill the following environment.

Items		Environment
Ambient temperature	Operation	0 °C to 55 °C (non-freezing)
	Storage	-20 °C to 65 °C (non-freezing)
Ambient humidity	Operation	90 %RH or less (non-condensing)
	Storage	
Ambience		Indoors (no direct sunlight), free from corrosive gas, flammable gas, oil mist, dust, and dirt
Altitude		Max. 1000 m above sea level
Vibration resistance		5.9 m/s^2 at 10 Hz to 55 Hz (directions of X, Y, and Z axes)

- When the equipment has been stored for an extended period of time, consult your local sales office.
- When handling the servo amplifier, be careful about the edged parts such as corners of the servo amplifier.
- The servo amplifier must be installed in the metal cabinet.
- When fumigants that contain halogen materials such as fluorine, chlorine, bromine, and iodine are used for disinfecting and protecting wooden packaging from insects, they cause malfunction when entering our products. Please take necessary precautions to ensure that remaining materials from fumigant do not enter our products, or treat packaging with methods other than fumigation (heat method).Additionally, disinfect and protect wood from insects before packing products.

(2) Wiring

⚠ CAUTION

- Wire the equipment correctly and securely. Otherwise, the servo motor may operate unexpectedly.
- Do not install a power capacitor, surge killer, or radio noise filter (FR-BIF-(H) option) on the servo amplifier output side.
- To avoid a malfunction, connect the wires to the correct phase terminals (U, V, and W) of the servo amplifier and servo motor.
- Connect the servo amplifier power output (U, V, and W) to the servo motor power input (U, V, and W) directly. Do not let a magnetic contactor, etc. intervene. Otherwise, it may cause a malfunction.

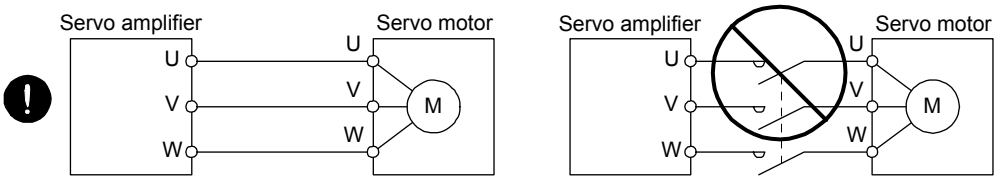

- The connection diagrams in this instruction manual are shown for sink interfaces, unless stated otherwise.
- The surge absorbing diode installed to the DC relay for control output should be fitted in the specified direction. Otherwise, the emergency stop and other protective circuits may not operate.

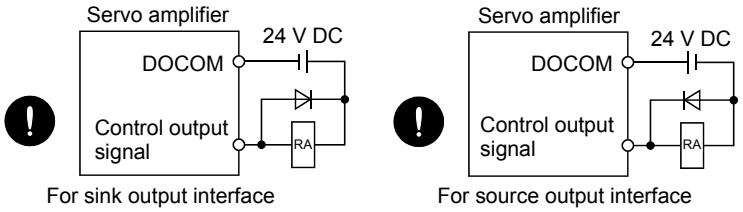

- When the cable is not tightened enough to the terminal block, the cable or terminal block may generate heat because of the poor contact. Be sure to tighten the cable with specified torque.
- Connecting a servo motor for different axis to the U, V, W, or CN2 may cause a malfunction.

(3) Test run and adjustment

⚠ CAUTION

- Before operation, check the parameter settings. Improper settings may cause some machines to perform unexpected operation.
- Never adjust or change the parameter values extremely as it will make operation unstable.
- Do not close to moving parts at servo-on status.

(4) Usage

⚠ CAUTION

- Provide an external emergency stop circuit to ensure that operation can be stopped and power switched off immediately.
- Do not disassemble, repair, or modify the equipment.
- Before resetting an alarm, make sure that the run signal of the servo amplifier is off in order to prevent a sudden restart. Otherwise, it may cause an accident.

⚠ CAUTION

- Use a noise filter, etc. to minimize the influence of electromagnetic interference. Electromagnetic interference may be given to the electronic equipment used near the servo amplifier.
- Burning or breaking a servo amplifier may cause a toxic gas. Do not burn or break it.
- Use the servo amplifier with the specified servo motor.
- The electromagnetic brake on the servo motor is designed to hold the motor shaft and should not be used for ordinary braking.
- For such reasons as service life and mechanical structure (e.g. where a ball screw and the servo motor are coupled via a timing belt), the electromagnetic brake may not hold the motor shaft. To ensure safety, install a stopper on the machine side.

(5) Corrective actions

⚠ CAUTION

- When it is assumed that a hazardous condition may occur due to a power failure or product malfunction, use a servo motor with an electromagnetic brake or external brake to prevent the condition.
- Configure an electromagnetic brake circuit so that it is activated also by an external EMG stop switch.

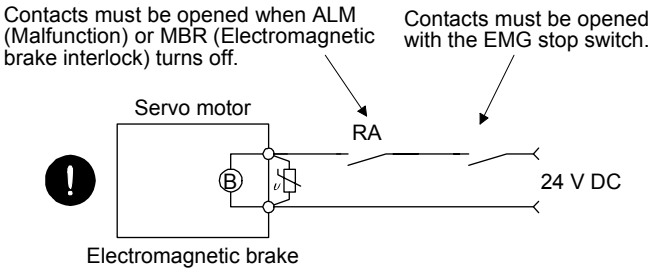

- When any alarm has occurred, eliminate its cause, ensure safety, and deactivate the alarm before restarting operation.
- Provide an adequate protection to prevent unexpected restart after an instantaneous power failure.

(6) Maintenance, inspection and parts replacement

⚠ CAUTION

- With age, the electrolytic capacitor of the servo amplifier will deteriorate. To prevent a secondary accident due to a malfunction, it is recommend that the electrolytic capacitor be replaced every 10 years when it is used in general environment. Please contact your local sales office.

(7) General instruction

- To illustrate details, the equipment in the diagrams of this Instruction Manual may have been drawn without covers and safety guards. When the equipment is operated, the covers and safety guards must be installed as specified. Operation must be performed in accordance with this Specifications and Instruction Manual.

● DISPOSAL OF WASTE ●

Please dispose a servo amplifier, battery (primary battery) and other options according to your local laws and regulations.

⚠ EEP-ROM life

The number of write times to the EEP-ROM, which stores parameter settings, etc., is limited to 100,000. If the total number of the following operations exceeds 100,000, the servo amplifier may malfunction when the EEP-ROM reaches the end of its useful life.

- Write to the EEP-ROM due to parameter setting changes
- Write to the EEP-ROM due to device changes

STO function of the servo amplifier

When using the STO function of the servo amplifier, refer to chapter 13.
For the MR-J3-D05 safety logic unit, refer to appendix 5.

Compliance with global standards

For the compliance with global standards, refer to appendix 4.

«About the manuals»

You must have this Instruction Manual and the following manuals to use this servo. Ensure to prepare them to use the servo safely.

Relevant manuals

Manual name	Manual No.
MELSERVO-J4 SERVO AMPLIFIER INSTRUCTION MANUAL (TROUBLESHOOTING)	SH(NA)030109
MELSERVO Servo Motor Instruction Manual (Vol. 3) (Note 1)	SH(NA)030113
MELSERVO Linear Servo Motor Instruction Manual (Note 2)	SH(NA)030110
MELSERVO Direct Drive Motor Instruction Manual (Note 3)	SH(NA)030112
MELSERVO Linear Encoder Instruction Manual (Note 2, 4)	SH(NA)030111
EMC Installation Guidelines	IB(NA)67310

Note 1. It is necessary for using a rotary servo motor.
2. It is necessary for using a linear servo motor.
3. It is necessary for using a direct drive motor.
4. It is necessary for using a fully closed loop system.

«Wiring»

Wires mentioned in this Instruction Manual are selected based on the ambient temperature of 40 °C.

«U.S. customary units»

U.S. customary units are not shown in this manual. Convert the values if necessary according to the following table.

Quantity	SI (metric) unit	U.S. customary unit
Mass	1 [kg]	2.2046 [lb]
Length	1 [mm]	0.03937 [in]
Torque	1 [N•m]	141.6 [oz•in]
Moment of inertia	1 [(× 10^{-4} kg•m^2)]	5.4675 [oz•in^2]
Load (thrust load/axial load)	1 [N]	0.2248 [lbf]
Temperature	N [°C] × 9/5 + 32	N [°F]

MEMO

CONTENTS

11. OPTIONS AND PERIPHERAL EQUIPMENT 11- 1 to 11-90

12. ABSOLUTE POSITION DETECTION SYSTEM 12- 1 to 12-10

MEMO

1. FUNCTIONS AND CONFIGURATION

1.1 Summary

The Mitsubishi MELSERVO-J4 series general-purpose AC servo has further higher performance and higher functions compared to the previous MELSERVO-J3 series.
MR-J4-_B_ servo amplifier is connected to controllers, including a servo system controller, on the high-speed synchronous network SSCNET III/H. The servo amplifier directly receives a command from a controller to drive a servo motor.
MELSERVO-J4 series compatible rotary servo motor is equipped with 22-bit (4194304 pulses/rev) high-resolution absolute encoder. In addition, speed frequency response is increased to 2.5 kHz. Thus, faster and more accurate control is enabled as compared to MELSERVO-J3 series.
MR-J4-_B_ servo amplifier operates MELSERVO-J4 series compatible rotary servo motors, linear servo motors, and direct drive motors as standard.
With one-touch tuning and real-time auto tuning, you can automatically adjust the servo gains according to the machine.
The tough drive function and the drive recorder function, which are well-received in the MELSERVO-JN series, have been improved. The MR-J4 servo amplifier supports the improved functions. Additionally, the preventive maintenance support function detects an error in the machine parts. This function provides strong support for the machine maintenance and inspection.
SSCNET III/H achieves high-speed communication of 150 Mbps full duplex with high noise immunity due to the SSCNET III optical cables. Large amounts of data are exchanged in real-time between the controller and the servo amplifier. Servo monitor information is stored in the upper information system and is used for control.
On the SSCNET III/H network, the stations are connected with a maximum distance of 100 m between them. This allows you to create a large system.
The MR-J4-_B_ servo amplifier supports the Safe Torque Off (STO) function. When the MR-J4W_-B servo amplifier is connected to a SSCNET III/H-compatible servo system controller, in addition to the STO function, the servo amplifier also supports the Safe Stop 1 (SS1), Safe Stop 2 (SS2), Safe Operating Stop (SOS), Safely-Limited Speed (SLS), Safe Brake Control (SBC), and Safe Speed Monitor (SSM) functions.
The MR-J4W_-B servo amplifier has a USB communication interface. Therefore, you can connect the servo amplifier to the personal computer with MR Configurator2 installed to perform the parameter setting, test operation, gain adjustment, and others.
In MELSERVO-J4 series, servo amplifiers with CN2L connector is also available as MR-J4-_B_-RJ. By using CN2L connector, an A/B/Z-phase differential output method external encoder can be connected to the servo amplifier. In a fully closed loop system, a four-wire type external encoder is connectable as well. The following table indicates the communication method of the external encoder compatible with MR-J4-_B_ and MR-J4-_B_-RJ servo amplifiers.

Table 1.1 Connectors to connect from external encoders

Operation mode	External encoder communication method	Connector	
		MR-J4-_B_	MR-J4-_B_-RJ
Linear servo motor system	Two-wire type	CN2 (Note 1)	CN2 (Note 1)
	Four-wire type		
	A/B/Z-phase differential output method		CN2L (Note 6)
Fully closed loop system	Two-wire type	CN2 (Note 2, 3, 4)	CN2L
	Four-wire type		
	A/B/Z-phase differential output method		
Scale measurement function	Two-wire type	CN2 (Note 2, 3, 5)	CN2L (Note 5)
	Four-wire type		
	A/B/Z-phase differential output method		

Note 1. The MR-J4THCBL03M branch cable is necessary.
2. The MR-J4FCCBL03M branch cable is necessary.
3. When the communication method of the servo motor encoder is four-wire type, MR-J4-_B_ cannot be used. Use an MR-J4-_B_-RJ.
4. This is used with servo amplifiers with software version A3 or later.
5. This is used with servo amplifiers with software version A8 or later.
6. Connect a thermistor to CN2.

1.2 Function block diagram

The function block diagram of this servo is shown below.

POINT
●The diagram shows for MR-J4-_B_-RJ as an example. MR-J4-_B_ servo amplifier does not have CN2L connector.

(1) 200 V class

(a) MR-J4-500B(-RJ) or less

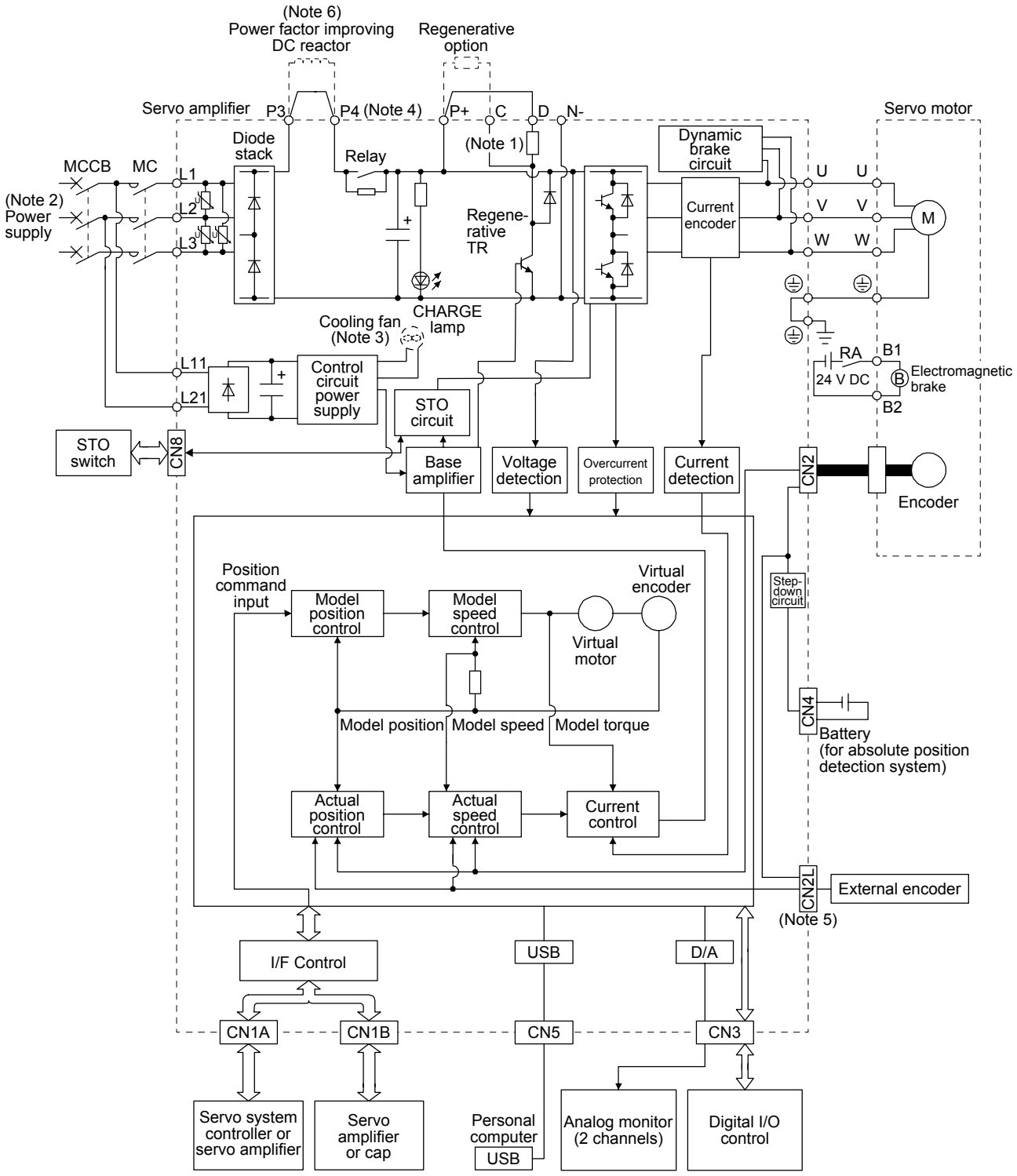

Note 1. The built-in regenerative resistor is not provided for MR-J4-10B(-RJ).
2. For 1-phase 200 V AC to 240 V AC, connect the power supply to L1 and L3. Leave L2 open.
Refer to section 1.3 for the power supply specifications.
3. Servo amplifiers MR-J4-70B(-RJ) or more have a cooling fan.
4. MR-J4 servo amplifier has P3 and P4 in the upstream of the inrush current suppression circuit. They are different from P1 and P2 of MR-J3 servo amplifiers.
5. This is for MR-J4-_B-RJ servo amplifier. MR-J4-_B servo amplifier does not have CN2L connector.
6. The power factor improving AC reactor can also be used. In this case, the power factor improving DC reactor cannot be used. When not using the power factor improving DC reactor, short P3 and P4.

(b) MR-J4-700B(-RJ)

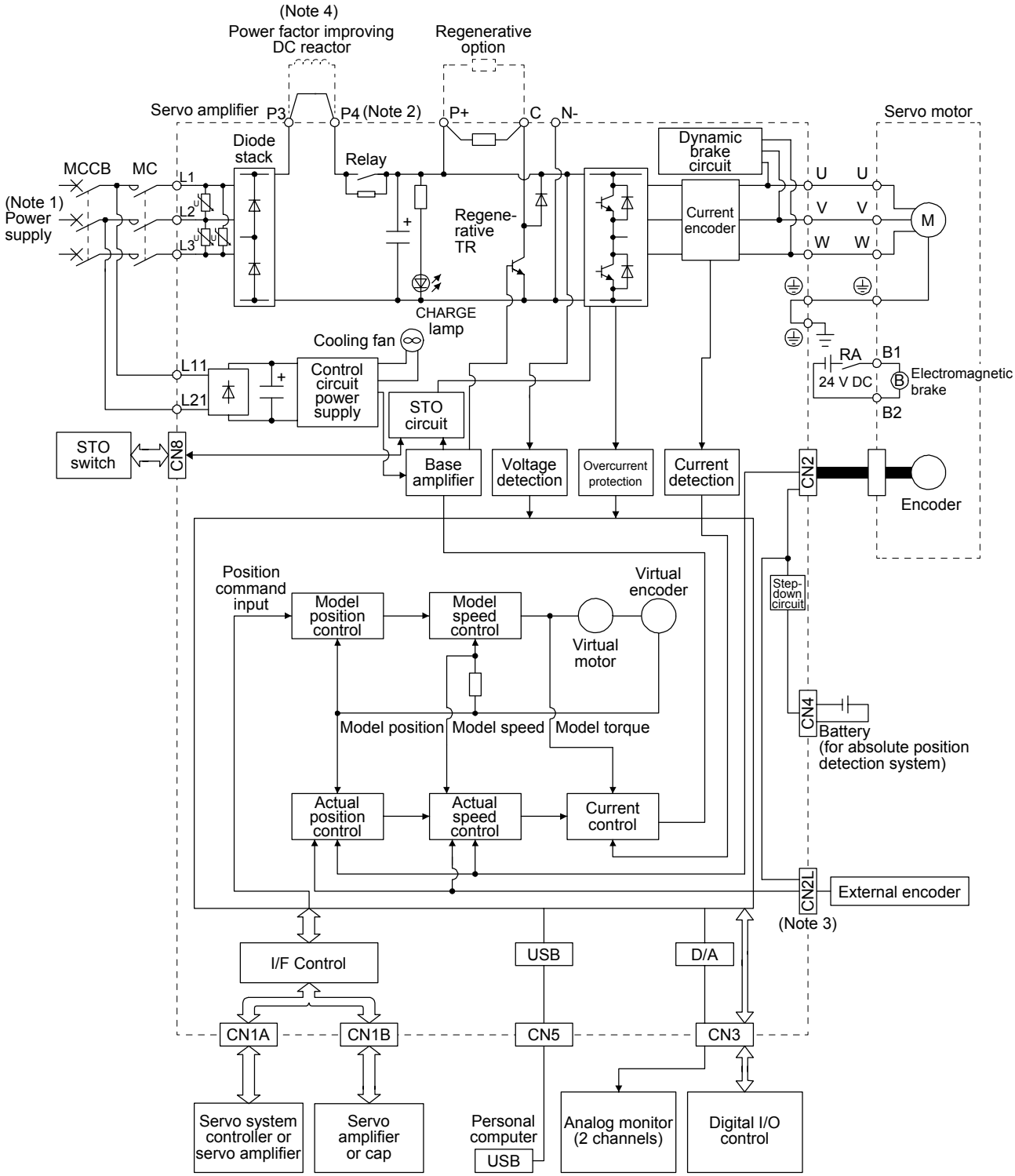

Note 1. Refer to section 1.3 for the power supply specifications.

2. MR-J4 servo amplifier has P3 and P4 in the upstream of the inrush current suppression circuit. They are different from P1 and P2 of MR-J3 servo amplifiers.

3. This is for MR-J4-_B-RJ servo amplifier. MR-J4-_B servo amplifier does not have CN2L connector.

4. The power factor improving AC reactor can also be used. In this case, the power factor improving DC reactor cannot be used. When not using the power factor improving DC reactor, short P3 and P4.

(c) MR-J4-11KB(-RJ)/MR-J4-15KB(-RJ)/MR-J4-22KB(-RJ)

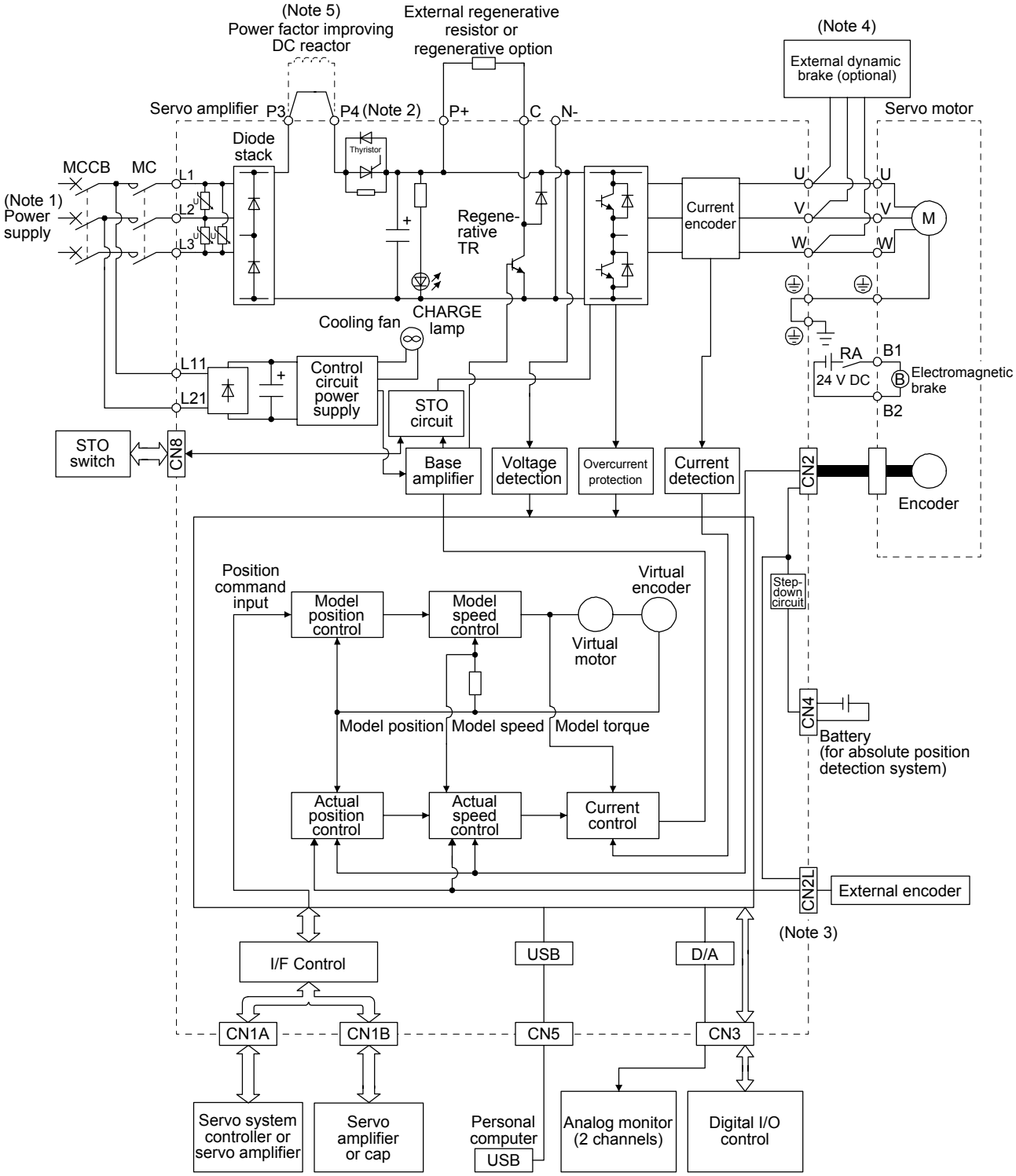

Note 1. Refer to section 1.3 for the power supply specifications.

2. MR-J4 servo amplifier has P3 and P4 in the upstream of the inrush current suppression circuit. They are different from P1 and P2 of MR-J3 servo amplifiers.

3. This is for MR-J4-_B-RJ servo amplifier. MR-J4-_B servo amplifier does not have CN2L connector.

4. Use an external dynamic brake for this servo amplifier. Failure to do so will cause an accident because the servo motor does not stop immediately but coasts at an alarm occurrence for which the servo motor does not decelerate to stop. Ensure the safety in the entire equipment. For alarms for which the servo motor does not decelerate to stop, refer to section 8.1.

5. The power factor improving AC reactor can also be used. In this case, the power factor improving DC reactor cannot be used. When not using the power factor improving DC reactor, short P3 and P4.

(2) 400 V class

(a) MR-J4-350B4(-RJ) or less

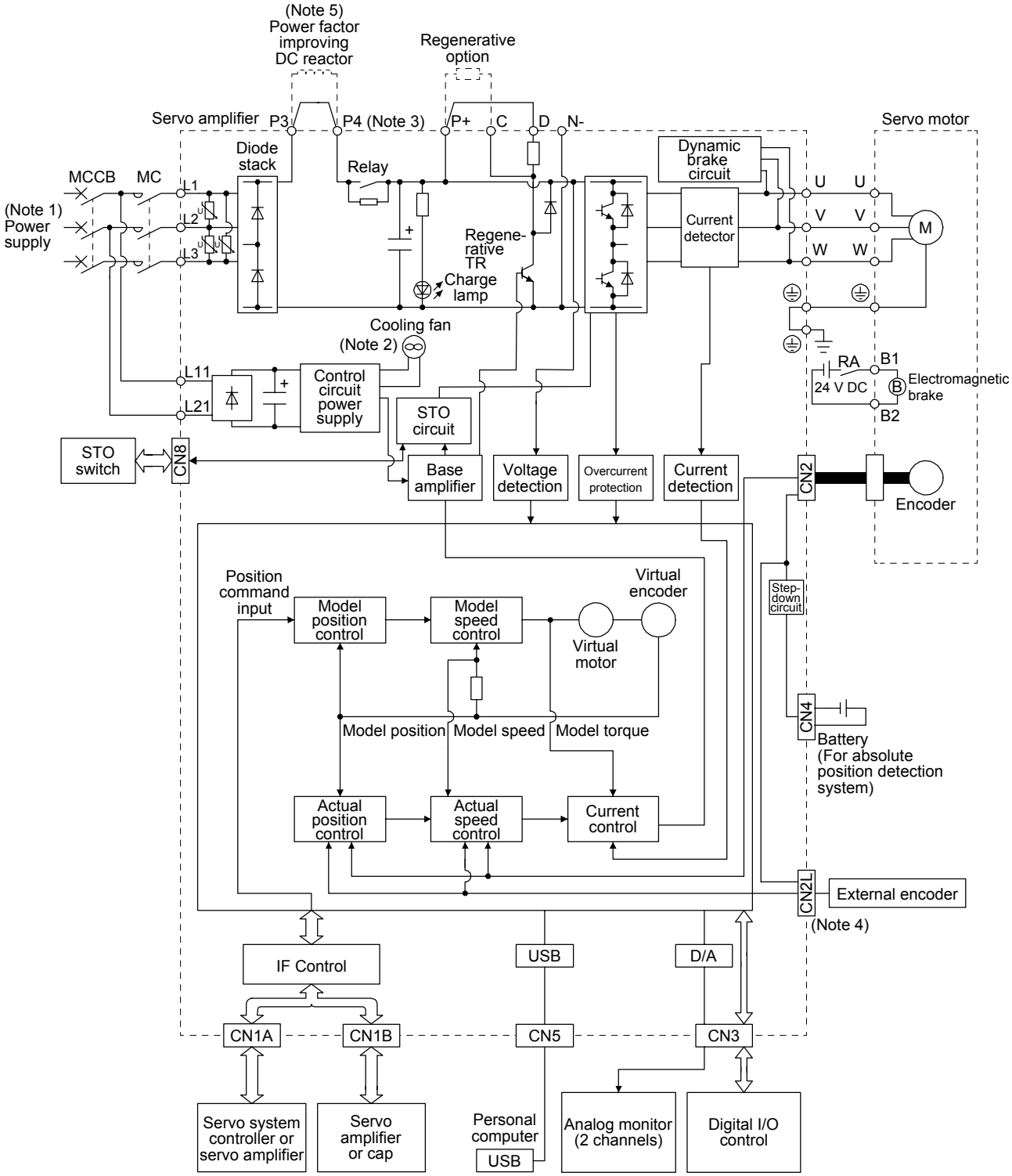

Note 1. Refer to section 1.3 for the power supply specification.

2. Servo amplifiers MR-J4-200B4(-RJ) or more have a cooling fan.

3. MR-J4 servo amplifier has P3 and P4 in the upstream of the inrush current suppression circuit. They are different from P1 and P2 of MR-J3 servo amplifiers.

4. This is for MR-J4-_B4-RJ servo amplifier. MR-J4-_B4 servo amplifier does not have CN2L connector.

5. The power factor improving AC reactor can also be used. In this case, the power factor improving DC reactor cannot be used. When not using the power factor improving DC reactor, short P3 and P4.

(b) MR-J4-500B4(-RJ)/MR-J4-700B4(-RJ)

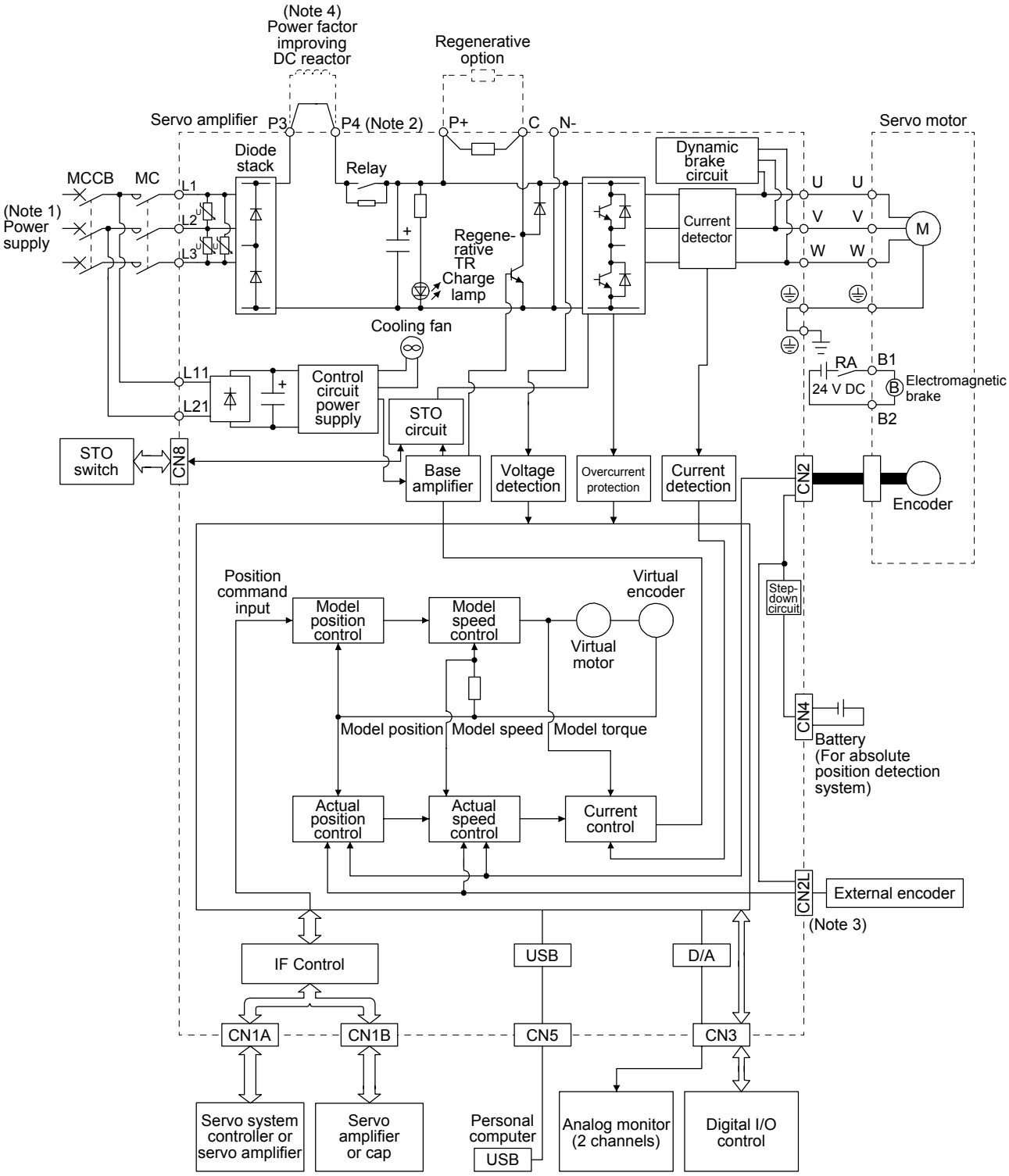

Note 1. Refer to section 1.3 for the power supply specification.

2. MR-J4 servo amplifier has P3 and P4 in the upstream of the inrush current suppression circuit. They are different from P1 and P2 of MR-J3 servo amplifiers.

3. This is for MR-J4-_B4-RJ servo amplifier. MR-J4-_B4 servo amplifier does not have CN2L connector.

4. The power factor improving AC reactor can also be used. In this case, the power factor improving DC reactor cannot be used. When not using the power factor improving DC reactor, short P3 and P4.

(c) MR-J4-11KB4(-RJ)/MR-J4-15KB4(-RJ)/MR-J4-22KB4(-RJ)

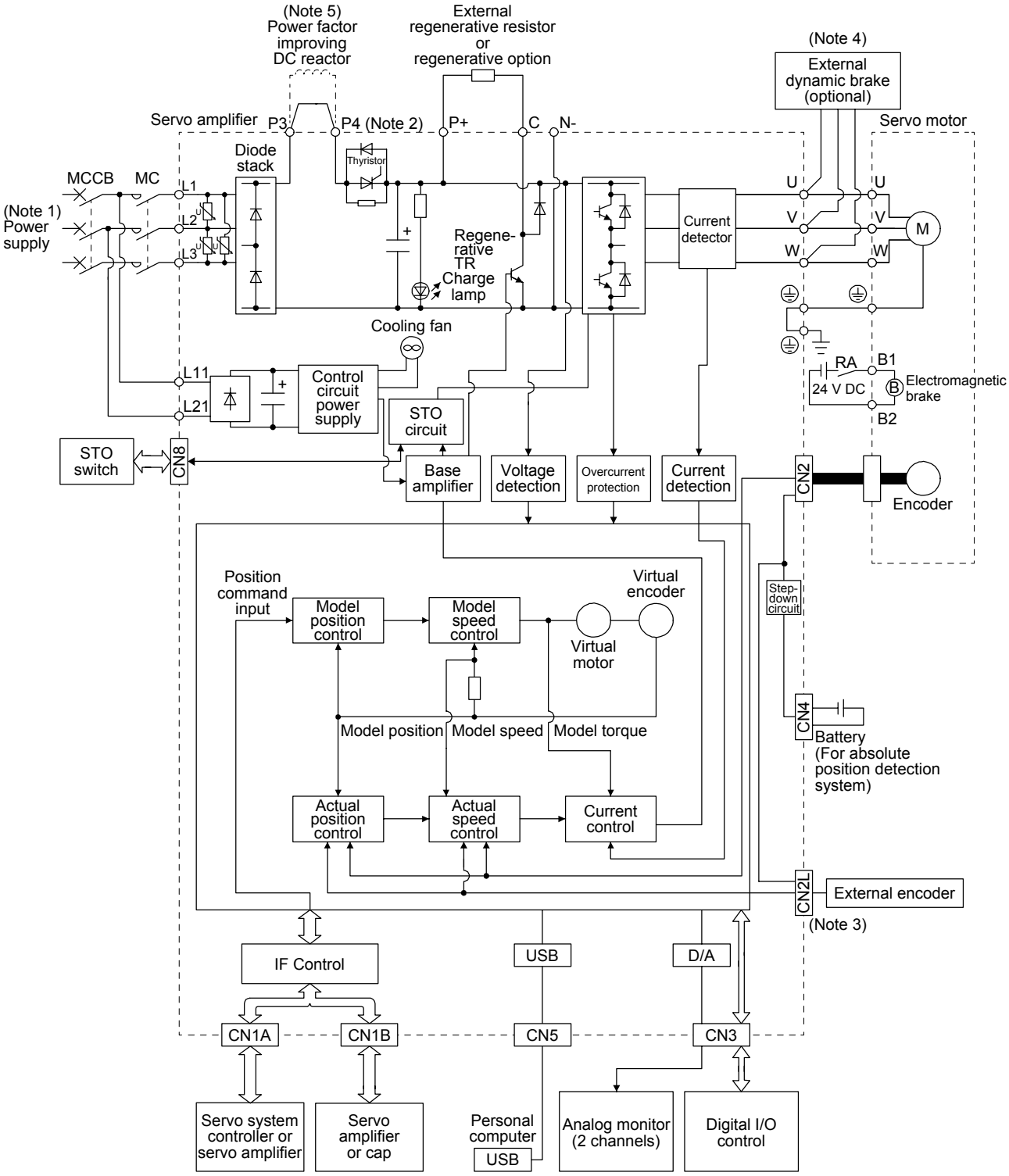

Note 1. Refer to section 1.3 for the power supply specification.
2. MR-J4 servo amplifier has P3 and P4 in the upstream of the inrush current suppression circuit. They are different from P1 and P2 of MR-J3 servo amplifiers.
3. This is for MR-J4-_B4-RJ servo amplifier. MR-J4-_B4 servo amplifier does not have CN2L connector.
4. Use an external dynamic brake for this servo amplifier. Failure to do so will cause an accident because the servo motor does not stop immediately but coasts at an alarm occurrence for which the servo motor does not decelerate to stop. Ensure the safety in the entire equipment. For alarms for which the servo motor does not decelerate to stop, refer to chapter 8.
5. The power factor improving AC reactor can also be used. In this case, the power factor improving DC reactor cannot be used. When not using the power factor improving DC reactor, short P3 and P4.

(3) 100 V class

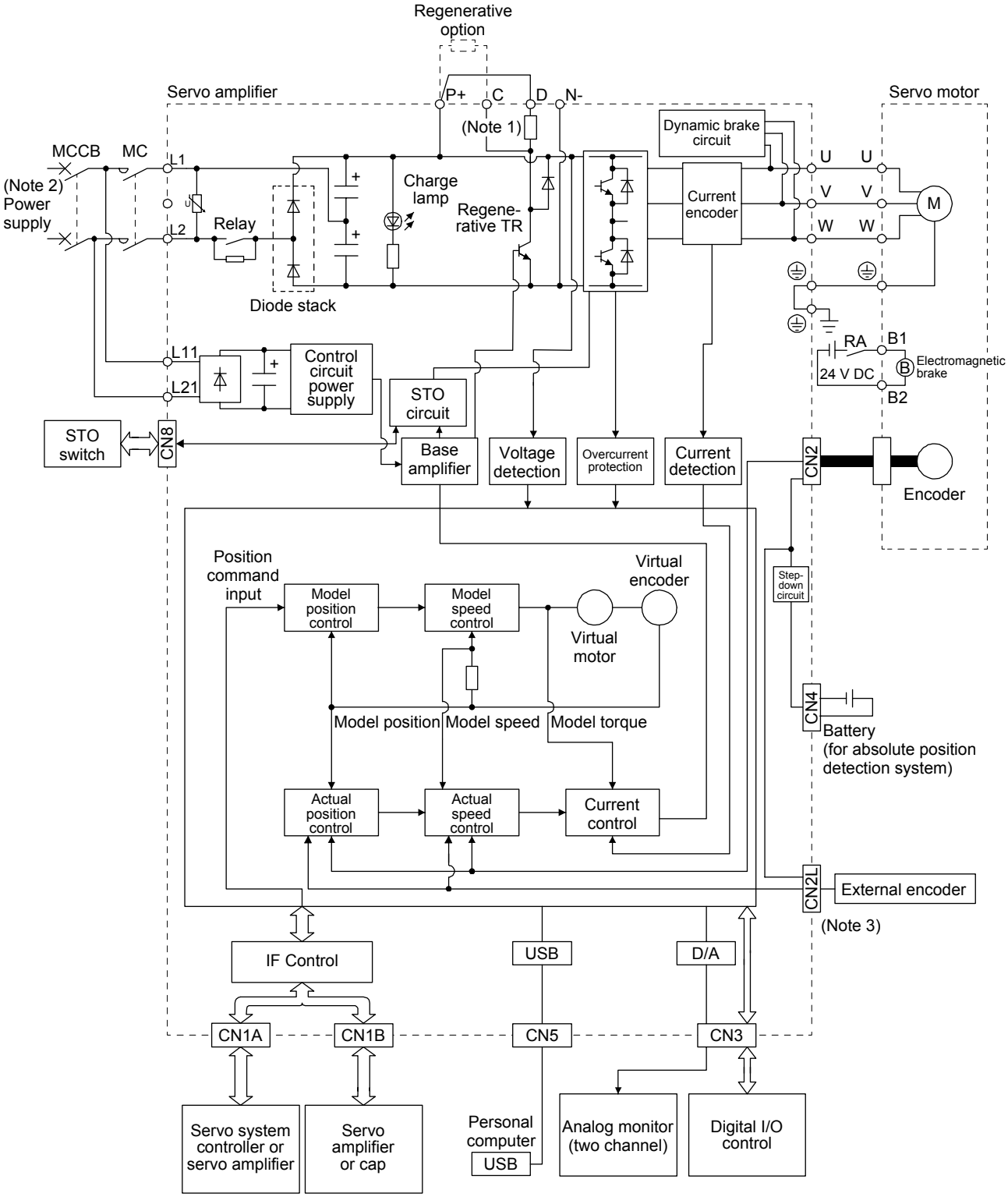

Note 1. The built-in regenerative resistor is not provided for MR-J4-10B1(-RJ).
2. Refer to section 1.3 for the power supply specifications.
3. This is for MR-J4-_B1-RJ servo amplifier. MR-J4-_B1 servo amplifier does not have CN2L connector.

1.3 Servo amplifier standard specifications

(1) 200 V class

Model: MR-J4-_(-RJ)			10B	20B	40B	60B	70B	100B	200B	350B	500B	700B	11KB	15KB	22KB
Output	Rated voltage		3-phase 170 V AC												
	Rated current	[A]	1.1	1.5	2.8	3.2	5.8	6.0	11.0	17.0	28.0	37.0	68.0	87.0	126.0
Main circuit power supply input	Voltage/Frequency		3-phase or 1-phase 200 V AC to 240 V AC, 50 Hz/60 Hz					3-phase 200 V AC to 240 V AC, 50 Hz/60 Hz							
	Rated current (Note 11)	[A]	0.9	1.5	2.6	3.2 (Note 6)	3.8	5.0	10.5	16.0	21.7	28.9	46.0	64.0	95.0
	Permissible voltage fluctuation		3-phase or 1-phase 170 V AC to 264 V AC					3-phase 170 V AC to 264 V AC							
	Permissible frequency fluctuation		Within ±5%												
	Power supply capacity	[kVA]	Refer to section 10.2.												
	Inrush current	[A]	Refer to section 10.5.												
Control circuit power supply input	Voltage/Frequency		1-phase 200 V AC to 240 V AC, 50 Hz/60 Hz												
	Rated current	[A]	0.2								0.3				
	Permissible voltage fluctuation		1-phase 170 V AC to 264 V AC												
	Permissible frequency fluctuation		Within ±5%												
	Power consumption	[W]	30								45				
	Inrush current	[A]	Refer to section 10.5.												
Interface power supply	Voltage		24 V DC ± 10%												
	Current capacity	[A]	(Note 1) 0.3 (including CN8 connector signals)												
Control method			Sine-wave PWM control, current control method												
Dynamic brake			Built-in										External option (Note 9)		
SSCNET III/H communication cycle (Note 8)			0.222 ms, 0.444 ms, 0.888 ms												
Fully closed loop control			Available (Note 7)												
Scale measurement function			Available (Note 10)												
Load-side encoder interface (Note 5)			Mitsubishi high-speed serial communication												
Communication function			USB: connection to a personal computer or others (MR Configurator2-compatible)												
Encoder output pulses			Compatible (A/B/Z-phase pulse)												
Analog monitor			Two channels												
Protective functions			Overcurrent shut-off, regenerative overvoltage shut-off, overload shut-off (electronic thermal), servo motor overheat protection, encoder error protection, regenerative error protection, undervoltage protection, instantaneous power failure protection, overspeed protection, error excessive protection, magnetic pole detection protection, and linear servo control fault protection												
Functional safety			STO (IEC/EN 61800-5-2)												
Safety performance	Standards certified by CB		EN ISO 13849-1 category 3 PL d, IEC 61508 SIL 2, EN 62061 SIL CL 2, and EN 61800-5-2 SIL 2												
	Response performance		8 ms or less (STO input off → energy shut off)												
	(Note 3) Test pulse input (STO)		Test pulse interval: 1 Hz to 25 Hz Test pulse off time: Up to 1 ms												
	Mean time to dangerous failure (MTTFd)		100 years or longer												
	Diagnosis coverage (DC)		Medium (90% to 99%)												
	Average probability of dangerous failures per hour (PFH)		1.68×10^{-10} [1/h]												
Compliance to global standards	CE marking		LVD: EN 61800-5-1 EMC: EN 61800-3 MD: EN ISO 13849-1, EN 61800-5-2, EN 62061												
	UL standard		UL 508C												
Structure (IP rating)			Natural cooling, open (IP20)				Force cooling, open (IP20)				Force cooling, open (IP20) (Note 4)				
Close mounting (Note 2)			Possible								Impossible				
Environment	Ambient temperature	Operation	0 ˚C to 55 ˚C (non-freezing)												
		Storage	-20 ˚C to 65 ˚C (non-freezing)												
	Ambient humidity	Operation Storage	90 %RH or less (non-condensing)												
	Ambience		Indoors (no direct sunlight), free from corrosive gas, flammable gas, oil mist, dust, and dirt												
	Altitude		1000 m or less above sea level												
	Vibration resistance		5.9 m/s^2, at 10 Hz to 55 Hz (directions of X, Y and Z axes)												
Mass		[kg]	0.8		1.0		1.4		2.1	2.3	4.0	6.2	13.4		18.2

Note 1. 0.3 A is the value applicable when all I/O signals are used. The current capacity can be decreased by reducing the number of I/O points.
2. When closely mounting the servo amplifier of 3.5 kW or less, operate them at the ambient temperatures of 0 ˚C to 45 ˚C or at 75% or smaller effective load ratio.
3. Test pulse is a signal which instantaneously turns off a signal to the servo amplifier at a constant period for external circuit to self-diagnose.
4. Except for the terminal block.
5. MR-J4-_B servo amplifier is compatible only with two-wire type. MR-J4-_B-RJ servo amplifier is compatible with two-wire type, four-wire type, and A/B/Z-phase differential output method. Refer to table 1.1 for details.
6 The rated current is 2.9 A when the servo amplifier is used with UL or CSA compliant servo motor.
7. For the compatible version of fully closed loop system, refer to table 1.1. Check the software version of the servo amplifier using MR Configurator2.
8. The communication cycle depends on the controller specifications and the number of axes connected.
9. Use an external dynamic brake for this servo amplifier. Failure to do so will cause an accident because the servo motor does not stop immediately but coasts at emergency stop. Ensure the safety in the entire equipment.
10. For the compatible version for the scale measurement function, refer to table 1.1. Check the software version of the servo amplifier using MR Configurator2.
11. This value is applicable when a 3-phase power supply is used.

(2) 400 V class

Model: MR-J4-_(-RJ)			60B4	100B4	200B4	350B4	500B4	700B4	11KB4	15KB4	22KB4
Output	Rated voltage		3-phase 323 V AC								
	Rated current	[A]	1.5	2.8	5.4	8.6	14.0	17.0	32.0	41.0	63.0
Main circuit power supply input	Voltage/Frequency		3-phase 380 V AC to 480 V AC, 50 Hz/60 Hz								
	Rated current	[A]	1.4	2.5	5.1	7.9	10.8	14.4	23.1	31.8	47.6
	Permissible voltage fluctuation		3-phase 323 V AC to 528 V AC								
	Permissible frequency fluctuation		Within ±5%								
	Power supply capacity	[kVA]	Refer to section 10.2.								
	Inrush current	[A]	Refer to section 10.5.								
Control circuit power supply input	Voltage/Frequency		1-phase 380 V AC to 480 V AC, 50 Hz/60 Hz								
	Rated current	[A]	0.1			0.2					
	Permissible voltage fluctuation		1-phase 323 V AC to 528 V AC								
	Permissible frequency fluctuation		Within ±5%								
	Power consumption	[W]	30			45					
	Inrush current	[A]	Refer to section 10.5.								
Interface power supply	Voltage		24 V DC ± 10%								
	Current capacity	[A]	(Note 1) 0.3 (including CN8 connector signals)								
Control method			Sine-wave PWM control, current control method								
Dynamic brake			Built-in						External option (Note 6)		
SSCNET III/H communication cycle (Note 5)			0.222 ms, 0.444 ms, 0.888 ms								
Fully closed loop control			Compatible								
Scale measurement function			Compatible (Note 7)								
Load-side encoder interface (Note 4)			Mitsubishi high-speed serial communication								
Communication function			USB: connection to a personal computer or others (MR Configurator2-compatible)								
Encoder output pulses			Compatible (A/B/Z-phase pulse)								
Analog monitor			Two channels								
Protective functions			Overcurrent shut-off, regenerative overvoltage shut-off, overload shut-off (electronic thermal), servo motor overheat protection, encoder error protection, regenerative error protection, undervoltage protection, instantaneous power failure protection, overspeed protection, error excessive protection, magnetic pole detection protection, and linear servo control fault protection								
Functional safety			STO (IEC/EN 61800-5-2)								
Safety performance	Standards certified by CB		EN ISO 13849-1 category 3 PL d, IEC 61508 SIL 2, EN 62061 SIL CL 2, and EN 61800-5-2 SIL 2								
	Response performance		8 ms or less (STO input off → energy shut off)								
	(Note 2) Test pulse input (STO)		Test pulse interval: 1 Hz to 25 Hz Test pulse off time: Up to 1 ms								
	Mean time to dangerous failure (MTTFd)		100 years or longer								
	Diagnosis converge (DC)		Medium (90% to 99%)								
	Average probability of dangerous failures per hour (PFH)		1.68×10^{-10} [1/h]								
Compliance to standards	CE marking		LVD: EN 61800-5-1 EMC: EN 61800-3 MD: EN ISO 13849-1, EN 61800-5-2, EN 62061								
	UL standard		UL 508C								
Structure (IP rating)			Natural cooling, open (IP20)		Force cooling, open (IP20)		Force cooling, open (IP20) (Note 3)				
Close mounting			Impossible								
Environment	Ambient temperature	Operation	0 ˚C to 55 ˚C (non-freezing)								
		Storage	-20 ˚C to 65 ˚C (non-freezing)								
	Ambient humidity	Operation Storage	90 %RH or less (non-condensing)								
	Ambience		Indoors (no direct sunlight), free from corrosive gas, flammable gas, oil mist, dust, and dirt								
	Altitude		1000 m or less above sea level								
	Vibration resistance		5.9 m/s^2, at 10 Hz to 55 Hz (directions of X, Y and Z axes)								
Mass		[kg]	1.7		2.1	3.6	4.3	6.5	13.4		18.2

Note 1. 0.3 A is the value applicable when all I/O signals are used. The current capacity can be decreased by reducing the number of I/O points.
2. Test pulse is a signal which instantaneously turns off a signal to the servo amplifier at a constant period for external circuit to self-diagnose.
3. Except for the terminal block.
4. MR-J4-B4 servo amplifier is compatible only with two-wire type. MR-J4-B4-RJ servo amplifier is compatible with two-wire type, four-wire type, and A/B/Z-phase differential output method. Refer to table 1.1 for details.
5. The communication cycle depends on the controller specifications and the number of axes connected.
6. Use an external dynamic brake for this servo amplifier. Failure to do so will cause an accident because the servo motor does not stop immediately but coasts at emergency stop. Ensure the safety in the entire equipment.
7. For the compatible version for the scale measurement function, refer to table 1.1. Check the software version of the servo amplifier using MR Configurator2.

(3) 100 V class

Model: MR-J4-_(-RJ)			10B1	20B1	40B1
Output	Rated voltage		3-phase 170 V AC		
	Rated current [A]		1.1	1.5	2.8
Main circuit power supply input	Voltage/Frequency		1-phase 100 V AC to 120 V AC, 50 Hz/60 Hz		
	Rated current (Note 11) [A]		3.0	5.0	9.0
	Permissible voltage fluctuation		1-phase 85 V AC to 132 V AC		
	Permissible frequency fluctuation		Within ±5%		
	Power supply capacity [kVA]		Refer to section 10.2.		
	Inrush current [A]		Refer to section 10.5.		
Control circuit power supply input	Voltage/Frequency		1-phase 100 V AC to 120 V AC, 50 Hz/60 Hz		
	Rated current [A]		0.4		
	Permissible voltage fluctuation		1-phase 85 V AC to 132 V AC		
	Permissible frequency fluctuation		Within ±5%		
	Power consumption [W]		30		
	Inrush current [A]		Refer to section 10.5.		
Interface power supply	Voltage		24 V DC ± 10%		
	Current capacity [A]		(Note 1) 0.3 (including CN8 connector signals)		
Control method			Sine-wave PWM control, current control method		
Dynamic brake			Built-in		
SSCNET III/H communication cycle (Note 6)			0.222 ms, 0.444 ms, 0.888 ms		
Fully closed loop control			Available (Note 5)		
Scale measurement function			Available (Note 7)		
Load-side encoder interface (Note 4)			Mitsubishi high-speed serial communication		
Communication function			USB: connection to a personal computer or others (MR Configurator2-compatible)		
Encoder output pulses			Compatible (A/B/Z-phase pulse)		
Analog monitor			Two channels		
Protective functions			Overcurrent shut-off, regenerative overvoltage shut-off, overload shut-off (electronic thermal), servo motor overheat protection, encoder error protection, regenerative error protection, undervoltage protection, instantaneous power failure protection, overspeed protection, error excessive protection, magnetic pole detection protection, and linear servo control fault protection		
Functional safety			STO (IEC/EN 61800-5-2)		
Safety performance	Standards certified by CB		EN ISO 13849-1 category 3 PL d, IEC 61508 SIL 2, EN 62061 SIL CL 2, and EN 61800-5-2 SIL 2		
	Response performance		8 ms or less (STO input off → energy shut off)		
	(Note 3) Test pulse input (STO)		Test pulse interval: 1 Hz to 25 Hz Test pulse off time: Up to 1 ms		
	Mean time to dangerous failure (MTTFd)		100 years or longer		
	Diagnosis coverage (DC)		Medium (90% to 99%)		
	Average probability of dangerous failures per hour (PFH)		1.68×10^{-10} [1/h]		
Compliance to global standards	CE marking		LVD: EN 61800-5-1 EMC: EN 61800-3 MD: EN ISO 13849-1, EN 61800-5-2, EN 62061		
	UL standard		UL 508C		
Structure (IP rating)			Natural cooling, open (IP20)		
Close mounting (Note 2)			Possible		
Environment	Ambient temperature	Operation	0 ˚C to 55 ˚C (non-freezing)		
		Storage	-20 ˚C to 65 ˚C (non-freezing)		
	Ambient humidity	Operation	90 %RH or less (non-condensing)		
		Storage			
	Ambience		Indoors (no direct sunlight), free from corrosive gas, flammable gas, oil mist, dust, and dirt		
	Altitude		1000 m or less above sea level		
	Vibration resistance		5.9 m/s^2, at 10 Hz to 55 Hz (directions of X, Y and Z axes)		
Mass [kg]			0.8		1.0

Note 1. 0.3 A is the value applicable when all I/O signals are used. The current capacity can be decreased by reducing the number of I/O points.
2. When closely mounting the servo amplifier of 3.5 kW or less, operate them at the ambient temperatures of 0 ˚C to 45 ˚C or at 75% or smaller effective load ratio.
3. Test pulse is a signal which instantaneously turns off a signal to the servo amplifier at a constant period for external circuit to self-diagnose.
4. MR-J4-_B servo amplifier is compatible only with two-wire type. MR-J4-_B-RJ servo amplifier is compatible with two-wire type, four-wire type, and A/B/Z-phase differential output type. Refer to table 1.1 for details.
5. For the compatible version of fully closed loop system, refer to table 1.1. Check the software version of the servo amplifier using MR Configurator2.
6 The communication cycle depends on the controller specifications and the number of axes connected.
7. For the compatible version for the scale measurement function, refer to table 1.1. Check the software version of the servo amplifier using MR Configurator2.

1.4 Combinations of servo amplifiers and servo motors

(1) 200 V class

Servo amplifier	Rotary servo motor							Linear servo motor (primary side)	Direct drive motor
	HG-KR	HG-MR	HG-SR	HG-UR	HG-RR	HG-JR	HG-JR (When the maximum torque is 400%)		
MR-J4-10B(-RJ)	053 13	053 13							
MR-J4-20B(-RJ)	23	23						LM-U2PAB-05M-0SS0 LM-U2PBB-07M-1SS0	TM-RFM002C20
MR-J4-40B(-RJ)	43	43						LM-H3P2A-07P-BSS0 LM-H3P3A-12P-CSS0 LM-K2P1A-01M-2SS1 LM-U2PAD-10M-0SS0 LM-U2PAF-15M-0SS0	TM-RFM004C20
MR-J4-60B(-RJ)			51 52			53		LM-U2PBD-15M-1SS0	TM-RFM006C20 TM-RFM006E20
MR-J4-70B(-RJ)	73	73		72		73		LM-H3P3B-24P-CSS0 LM-H3P3C-36P-CSS0 LM-H3P7A-24P-ASS0 LM-K2P2A-02M-1SS1 LM-U2PBF-22M-1SS0	TM-RFM012E20 TM-RFM012G20 TM-RFM040J10
MR-J4-100B(-RJ)			81 102			103	53		TM-RFM018E20
MR-J4-200B(-RJ)			121 201 152 202	152	103 153	153 203	73 103	LM-H3P3D-48P-CSS0 LM-H3P7B-48P-ASS0 LM-H3P7C-72P-ASS0 LM-FP2B-06M-1SS0 LM-K2P1C-03M-2SS1 LM-U2P2B-40M-2SS0	
MR-J4-350B(-RJ)			301 352	202	203	353	153 203	LM-H3P7D-96P-ASS0 LM-K2P2C-07M-1SS1 LM-K2P3C-14M-1SS1 LM-U2P2C-60M-2SS0	TM-RFM048G20 TM-RFM072G20 TM-RFM120J10
MR-J4-500B(-RJ)			421 502	352 502	353 503	503	353	LM-FP2D-12M-1SS0 LM-FP4B-12M-1SS0 LM-K2P2E-12M-1SS1 LM-K2P3E-24M-1SS1 LM-U2P2D-80M-2SS0	TM-RFM240J10
MR-J4-700B(-RJ)			702			703	503	LM-FP2F-18M-1SS0 LM-FP4D-24M-1SS0	
MR-J4-11KB(-RJ)						903 11K1M		LM-FP4F-36M-1SS0	
MR-J4-15KB(-RJ)						15K1M		LM-FP4F-48M-1SS0	
MR-J4-22KB(-RJ)						22K1M			

(2) 400 V class

Servo amplifier	Rotary servo motor			Linear servo motor (primary side)
	HG-SR	HG-JR	HG-JR (When the maximum torque is 400%)	
MR-J4-60B4(-RJ)	524	534		
MR-J4-100B4(-RJ)	1024	734, 1034	534	
MR-J4-200B4(-RJ)	1524, 2024	1534, 2034	734, 1034	
MR-J4-350B4(-RJ)	3524	3534	1534, 2034	
MR-J4-500B4(-RJ)	5024	5034	3534	
MR-J4-700B4(-RJ)	7024	7034	5034	
MR-J4-11KB4(-RJ)		9034, 11K1M4		
MR-J4-15KB4(-RJ)		15K1M4		
MR-J4-22KB4(-RJ)		22K1M4		LM-FP5H-60M-1SS0

(3) 100 V class

Servo amplifier	Rotary servo motor	
	HG-KR	HG-MR
MR-J4-10B1(-RJ)	053 13	053 13
MR-J4-20B1(-RJ)	23	23
MR-J4-40B1(-RJ)	43	43

1.5 Function list

The following table lists the functions of this servo. For details of the functions, refer to each section of the detailed description field.

Function	Description	Detailed explanation
Position control mode	This servo is used as a position control servo.	
Speed control mode	This servo is used as a speed control servo.	
Torque control mode	This servo is used as a torque control servo.	
High-resolution encoder	High-resolution encoder of 4194304 pulses/rev is used as the encoder of the rotary servo motor compatible with the MELSERVO-J4 series.	
Absolute position detection system	Merely setting a home position once makes home position return unnecessary at every power-on.	Chapter 12
Gain switching function	You can switch gains during rotation and during stop, and can use an input device to switch gains during operation.	Section 7.2
Advanced vibration suppression control II	This function suppresses vibration at the arm end or residual vibration.	Section 7.1.5
Machine resonance suppression filter	This is a filter function (notch filter) which decreases the gain of the specific frequency to suppress the resonance of the mechanical system.	Section 7.1.1
Shaft resonance suppression filter	When a load is mounted to the servo motor shaft, resonance by shaft torsion during driving may generate a mechanical vibration at high frequency. The shaft resonance suppression filter suppresses the vibration.	Section 7.1.3
Adaptive filter II	Servo amplifier detects mechanical resonance and sets filter characteristics automatically to suppress mechanical vibration.	Section 7.1.2
Low-pass filter	Suppresses high-frequency resonance which occurs as servo system response is increased.	Section 7.1.4
Machine analyzer function	Analyzes the frequency characteristic of the mechanical system by simply connecting a MR Configurator2 installed personal computer and servo amplifier. MR Configurator2 is necessary for this function.	
Robust filter	This function provides better disturbance response in case low response level that load to motor inertia ratio is high for such as roll send axes.	[Pr. PE41]
Slight vibration suppression control	Suppresses vibration of ±1 pulse produced at a servo motor stop.	[Pr. PB24]
Auto tuning	Automatically adjusts the gain to optimum value if load applied to the servo motor shaft varies.	Section 6.3
Brake unit	Used when the regenerative option cannot provide enough regenerative power. Can be used for the 5 kW or more servo amplifier.	Section 11.3
Power regeneration converter	Used when the regenerative option cannot provide enough regenerative power. Can be used for the 5 kW or more servo amplifier.	Section 11.4
Regenerative option	Used when the built-in regenerative resistor of the servo amplifier does not have sufficient regenerative capability for the regenerative power generated.	Section 11.2
Alarm history clear	Alarm history is cleared.	[Pr. PC21]
Output signal selection (device settings)	The output devices including ALM (Malfunction) and DB (Dynamic brake interlock) can be assigned to certain pins of the CN3 connector.	[Pr. PD07] to [Pr. PD09]
Output signal (DO) forced output	Output signal can be forced on/off independently of the servo status. Use this function for checking output signal wiring, etc.	Section 4.5.1 (1) (d)
Test operation mode	Jog operation, positioning operation, motor-less operation, DO forced output, and program operation MR Configurator2 is necessary for this function.	Section 4.5
Analog monitor output	Servo status is output in terms of voltage in real time.	[Pr. PC09], [Pr. PC10]
MR Configurator2	Using a personal computer, you can perform the parameter setting, test operation, monitoring, and others.	Section 11.7
Linear servo system	Linear servo system can be configured using a linear servo motor and liner encoder.	Chapter 14
Direct drive servo system	Direct drive servo system can be configured to drive a direct drive motor.	Chapter 15
Fully closed loop system	Fully closed loop system can be configured using the load-side encoder. This is used with servo amplifiers with software version A3 or later. Check the software version of the servo amplifier using MR Configurator2.	Chapter 16
One-touch tuning	Gain adjustment is performed just by one click on a certain button on MR Configurator2. MR Configurator2 is necessary for this function.	Section 6.2

Function	Description	Detailed explanation
SEMI-F47 function (Note)	Enables to avoid triggering [AL. 10 Undervoltage] using the electrical energy charged in the capacitor in case that an instantaneous power failure occurs during operation. Use a 3-phase for the input power supply of the servo amplifier. Using a 1-phase 100 V AC/200 V AC for the input power supply will not comply with SEMI-F47 standard.	[Pr. PA20] [Pr. PE25] Section 7.4
Tough drive function	This function makes the equipment continue operating even under the condition that an alarm occurs. The tough drive function includes two types: the vibration tough drive and the instantaneous power failure tough drive.	Section 7.3
Drive recorder function	This function continuously monitors the servo status and records the status transition before and after an alarm for a fixed period of time. You can check the recorded data on the drive recorder window on MR Configurator2 by clicking the "Graph" button. However, the drive recorder will not operate on the following conditions. 1. You are using the graph function of MR Configurator2. 2. You are using the machine analyzer function. 3. [Pr. PF21] is set to "-1". 4. The controller is not connected (except the test operation mode). 5. An alarm related to the controller is occurring.	[Pr. PA23]
STO function	This function is a functional safety that complies with IEC/EN 61800-5-2. You can create a safety system for the equipment easily.	
Servo amplifier life diagnosis function	You can check the cumulative energization time and the number of on/off times of the inrush relay. This function gives an indication of the replacement time for parts of the servo amplifier including a capacitor and a relay before they malfunction. MR Configurator2 is necessary for this function.	
Power monitoring function	This function calculates the power running energy and the regenerative power from the data in the servo amplifier such as speed and current. For the SSCNET III/H system, MR Configurator2 can display the data, including the power consumption. Since the servo amplifier can send the data to a servo system controller, you can analyze the data and display the data on a display.	
Machine diagnosis function	From the data in the servo amplifier, this function estimates the friction and vibrational component of the drive system in the equipment and recognizes an error in the machine parts, including a ball screw and bearing. MR Configurator2 is necessary for this function.	
Master-slave operation function	The function transmits a master axis torque to slave axes using driver communication and the torque as a command drives slave axes by torque control. This is used with servo amplifiers with software version A8 or later. Check the software version of the servo amplifier using MR Configurator2.	Section 17.2
Scale measurement function	The function transmits position information of a scale measurement encoder to the controller by connecting the scale measurement encoder in semi closed loop control. This is used with servo amplifiers with software version A8 or later. Check the software version of the servo amplifier using MR Configurator2.	Section 17.3
J3 compatibility mode	This amplifier has "J3 compatibility mode" which compatible with the previous MR-J3-B series. Refer to section 17.1 for software versions.	Section 17.1
Continuous operation to torque control mode	This enables to smoothly switch the mode from position control mode/speed control mode to torque control mode without stopping. This also enables to decrease load to the machine and high quality molding without rapid changes in speed or torque. For details of the continuous operation to torque control mode, refer to the manuals for servo system controllers.	[Pr. PB03] Refer to the servo system controller manual used.

Note. For servo system controllers which are available with this, contact your local sales office.

1.6 Model designation

(1) Rating plate

The following shows an example of rating plate for explanation of each item.

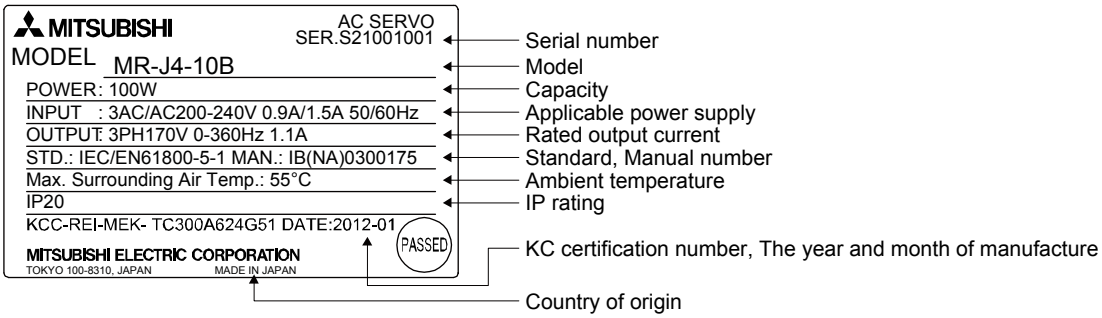

(2) Model

The following describes what each block of a model name indicates. Not all combinations of the symbols are available.

MR－J4－60B4－RJ

Series

Rated output

Symbol	Rated output [kW]
10	0.1
20	0.2
40	0.4
60	0.6
70	0.75
100	1
200	2
350	3.5
500	5
700	7
11K	11
15K	15
22K	22

Special specifications

Symbol	Special specifications
None	Standard
-RJ	Fully closed loop control four-wire type/ load-side encoder A/B/Z-phase input compatible
-ED	MR-J4-_B_ without a dynamic brake (Note 2)
-RU	MR-J4-_B_-RJ without a dynamic brake (Note 2)
-PX	MR-J4-_B_ without regenerative resistor (Note 1)
-RZ	MR-J4-_B_-RJ without regenerative resistor (Note 1)

Note1. Indicates a servo amplifier of 11 kW to 22 kW that does not use a regenerative resistor as standard accessory. Refer to Appendix 11.2 for details.
2. Dynamic brake which is built in 7 kw or smaller servo amplifiers is removed. Refer to Appendix 11.1 for details.

Power supply

Symbol	Power supply
None	3-phase or 1-phase 200 V AC to 240 V AC
1	1-phase 100 V AC to 120 V AC
4	3-phase 380 V AC to 480 V AC

SSCNETIII/H interface

1.7 Structure

1.7.1 Parts identification

(1) 200 V class

(a) MR-J4-200B(-RJ) or less

The diagram is for MR-J4-10B-RJ.

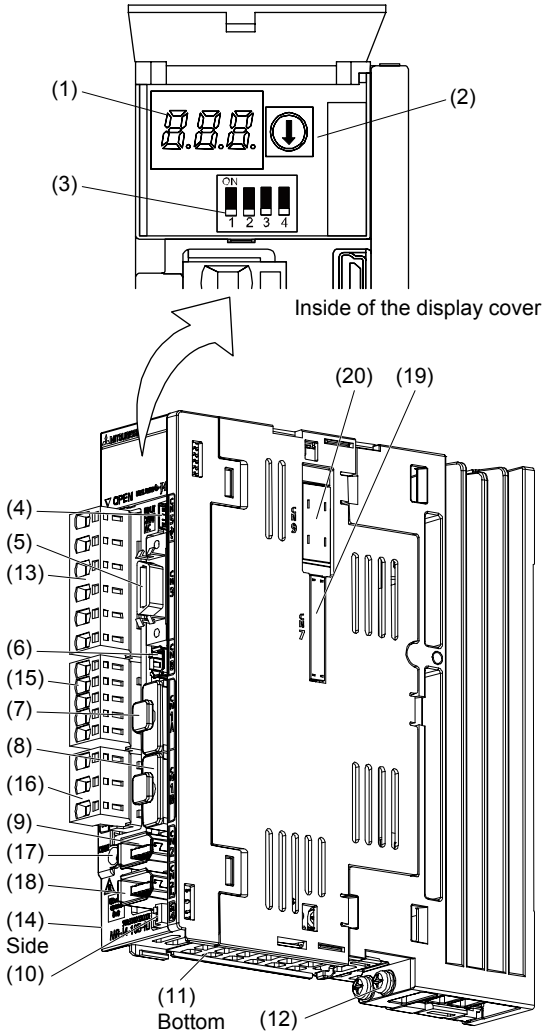

No.	Name/Application	Detailed explanation
(1)	Display The 3-digit, seven-segment LED shows the servo status and the alarm number.	Section 4.3
(2)	Axis selection rotary switch (SW1) Used to set the axis No. of servo amplifier.	
(3)	Control axis setting switch (SW2) The test operation switch, the control axis deactivation setting switch, and the auxiliary axis number setting switch are available.	
(4)	USB communication connector (CN5) Connect with the personal computer.	Section 11.7
(5)	I/O signal connector (CN3) Used to connect digital I/O signals.	Section 3.2 Section 3.4
(6)	STO input signal connector (CN8) Used to connect MR-J3-D05 safety logic unit and external safety relay.	Chapter 13 App. 5
(7)	SSCNET III cable connector (CN1A) Used to connect the servo system controller or the previous axis servo amplifier.	Section 3.2 Section 3.4
(8)	SSCNET III cable connector (CN1B) Used to connect the next axis servo amplifier. For the final axis, put a cap.	
(9) (Note 2)	Encoder connector (CN2) Used to connect the servo motor encoder. Used to connect the servo motor encoder or external encoder. Refer to table 1.1 for the compatible external encoders.	Section 3.4 "Servo Motor Instruction Manual (Vol. 3)"
(10)	Battery connector (CN4) Used to connect the battery for absolute position data backup.	Chapter 12
(11)	Battery holder Install the battery for absolute position data backup.	Section 12.2
(12)	Protective earth (PE) terminal Grounding terminal	Section 3.1 Section 3.3
(13)	Main circuit power supply connector (CNP1) Connect the input power supply.	
(14)	Rating plate	Section 1.6
(15)	Control circuit power supply connector (CNP2) Connect the control circuit power supply and regenerative option.	Section 3.1 Section 3.3
(16)	Servo motor power output connector (CNP3) Connect the servo motor.	
(17)	Charge lamp When the main circuit is charged, this will light. While this lamp is lit, do not reconnect the cables.	
(18) (Note 1, 2)	External encoder connector (CN2L) Refer to table 1.1 for connections of external encoders.	"Linear Encoder Instruction Manual"
(19)	Manufacturer setting connector (CN7) This connector is attached on MR-J4-_B-RJ servo amplifier, but not for use. MR-J4-_B servo amplifier does not have this connector.	
(20)	Manufacturer setting connector (CN9) This connector is attached on MR-J4-_B-RJ servo amplifier, but not for use. MR-J4-_B servo amplifier does not have this connector.	

Note 1. This is for MR-J4-_B-RJ servo amplifier. MR-J4-_B servo amplifier does not have CN2L connector.
2. "External encoder" is a term for linear encoder used in the linear servo system, load-side encoder used in the fully closed loop system, and scale measurement encoder used with the scale measurement function in this manual.

(b) MR-J4-350B(-RJ)

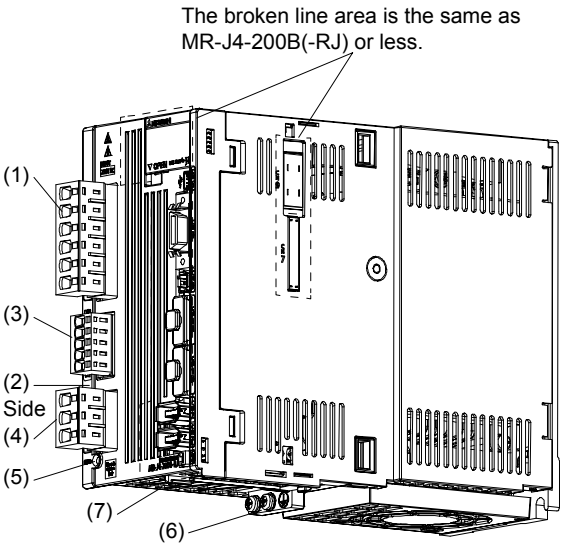

No.	Name/Application	Detailed explanation
(1)	Main circuit power supply connector (CNP1) Connect the input power supply.	Section 3.1 Section 3.3
(2)	Rating plate	Section 1.6
(3)	Servo motor power supply connector (CNP3) Connect the servo motor.	Section 3.1 Section 3.3
(4)	Control circuit power supply connector (CNP2) Connect the control circuit power supply and regenerative option.	
(5)	Charge lamp When the main circuit is charged, this will light. While this lamp is lit, do not reconnect the cables.	
(6)	Protective earth (PE) terminal Grounding terminal	Section 3.1 Section 3.3
(7)	Battery holder Install the battery for absolute position data backup.	Section 12.2

(c) MR-J4-500B(-RJ)

POINT

●The servo amplifier is shown with the front cover open. The front cover cannot be removed.

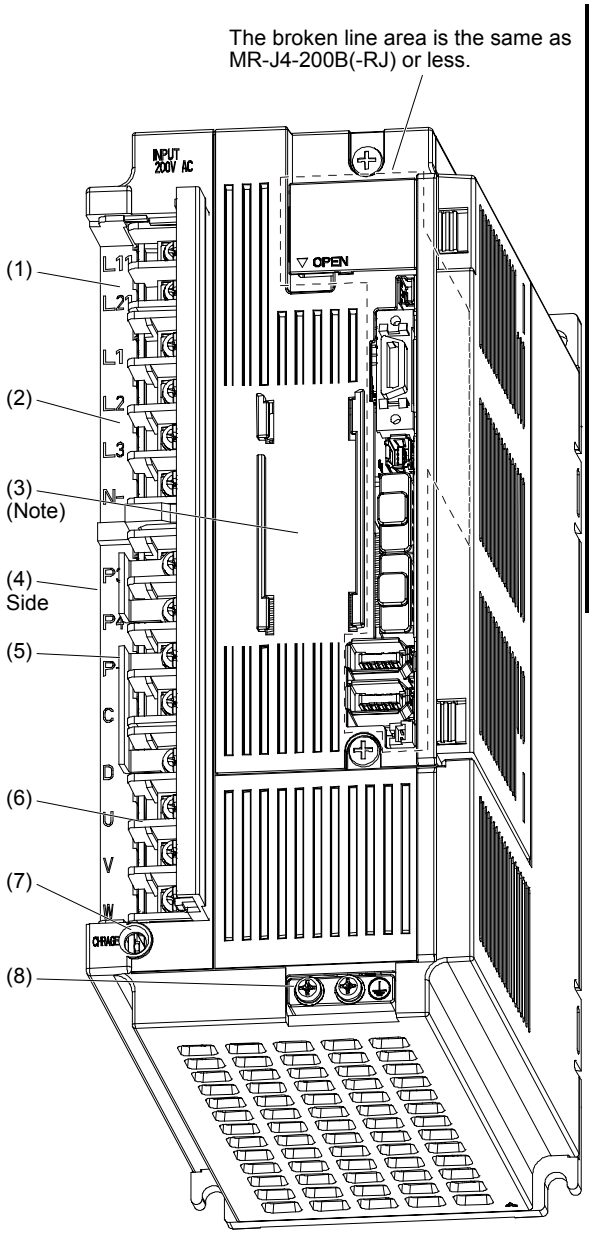

No.	Name/Application	Detailed explanation
(1)	Control circuit terminal block (TE2) Used to connect the control circuit power supply.	Section 3.1 Section 3.3
(2)	Main circuit terminal block (TE1) Connect the input power supply.	
(3)	Battery holder Install the battery for absolute position data backup.	Section 12.2
(4)	Rating plate	Section 1.6
(5)	Regenerative option/power factor improving reactor terminal block (TE3) Used to a connect a regenerative option and a power factor improving DC reactor.	Section 3.1 Section 3.3
(6)	Servo motor power supply terminal block (TE4) Connect the servo motor.	
(7)	Charge lamp When the main circuit is charged, this will light. While this lamp is lit, do not reconnect the cables.	
(8)	Protective earth (PE) terminal Grounding terminal	Section 3.1 Section 3.3

Note. Lines for slots around the battery holder are omitted from the illustration.

(d) MR-J4-700B(-RJ)

POINT

●The servo amplifier is shown without the front cover. For removal of the front cover, refer to section 1.7.2.

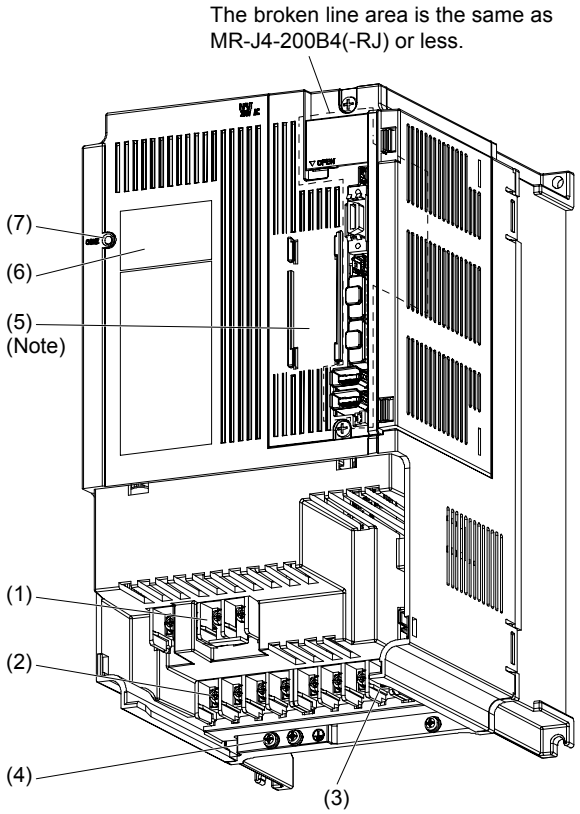

No.	Name/Application	Detailed explanation
(1)	Power factor improving reactor terminal block (TE3) Used to connect the DC reactor.	Section 3.1 Section 3.3
(2)	Main circuit terminal block (TE1) Used to connect the input power supply, regenerative option, and servo motor.	
(3)	Control circuit terminal block (TE2) Used to connect the control circuit power supply.	
(4)	Protective earth (PE) terminal Grounding terminal	
(5)	Battery holder Install the battery for absolute position data backup.	Section 12.2
(6)	Rating plate	Section 1.6
(7)	Charge lamp When the main circuit is charged, this will light. While this lamp is lit, do not reconnect the cables.	

Note. Lines for slots around the battery holder are omitted from the illustration.

(e) MR-J4-11KB(-RJ)/MR-J4-15KB(-RJ)

POINT

●The servo amplifier is shown without the front cover. For removal of the front cover, refer to section 1.7.2.

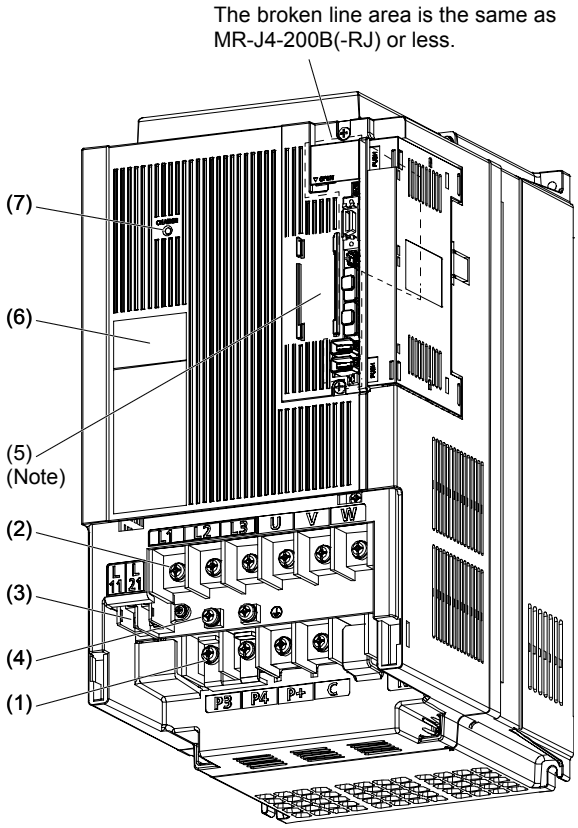

No.	Name/Application	Detailed explanation
(1)	Power factor improving reactor terminal block (TE1-2) Used to connect a power factor improving DC reactor and a regenerative option.	Section 3.1 Section 3.3
(2)	Main circuit terminal block (TE1-1) Used to connect the input power supply and servo motor.	
(3)	Control circuit terminal block (TE2) Used to connect the control circuit power supply.	
(4)	Protective earth (PE) terminal Grounding terminal	
(5)	Battery holder Install the battery for absolute position data backup.	Section 12.2
(6)	Rating plate	Section 1.6
(7)	Charge lamp When the main circuit is charged, this will light. While this lamp is lit, do not reconnect the cables.	

Note. Lines for slots around the battery holder are omitted from the illustration.

(f) MR-J4-22KB(-RJ)

POINT

●The servo amplifier is shown without the front cover. For removal of the front cover, refer to section 1.7.2.

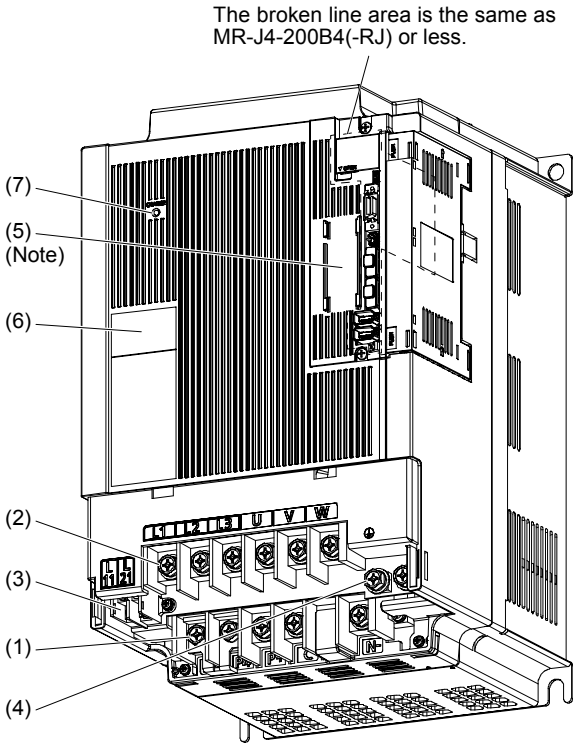

No.	Name/Application	Detailed explanation
(1)	Power factor improving reactor terminal block (TE1-2) Used to connect a power factor improving DC reactor and a regenerative option.	Section 3.1 Section 3.3
(2)	Main circuit terminal block (TE1-1) Used to connect the input power supply and servo motor.	
(3)	Control circuit terminal block (TE2) Used to connect the control circuit power supply.	
(4)	Protective earth (PE) terminal Grounding terminal	
(5)	Battery holder Install the battery for absolute position data backup.	Section 12.2
(6)	Rating plate	Section 1.6
(7)	Charge lamp When the main circuit is charged, this will light. While this lamp is lit, do not reconnect the cables.	

Note. Lines for slots around the battery holder are omitted from the illustration.

(2) 400 V class

(a) MR-J4-200B4(-RJ) or less

The diagram is for MR-J4-60B4-RJ.

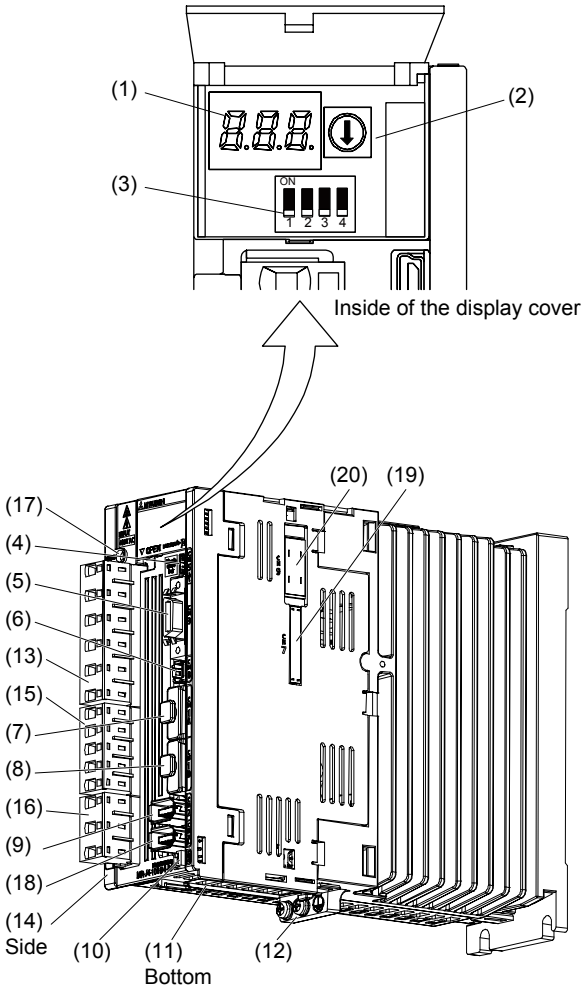

No.	Name/Application	Detailed explanation
(1)	Display The 3-digit, seven-segment LED shows the servo status and the alarm number.	Section 4.3
(2)	Axis selection rotary switch (SW1) Used to set the axis No. of servo amplifier.	
(3)	Control axis setting switch (SW2) The test operation switch, the control axis deactivation setting switch, and the auxiliary axis number setting switch are available.	
(4)	USB communication connector (CN5) Connect with the personal computer.	Section 11.7
(5)	I/O signal connector (CN3) Used to connect digital I/O signals.	Section 3.2 Section 3.4
(6)	STO input signal connector (CN8) Used to connect MR-J3-D05 safety logic unit and external safety relay.	Chapter 13 App. 5
(7)	SSCNET III cable connector (CN1A) Used to connect the servo system controller or the previous axis servo amplifier.	Section 3.2 Section 3.4
(8)	SSCNET III cable connector (CN1B) Used to connect the next axis servo amplifier. For the final axis, put a cap.	
(9) (Note 2)	Encoder connector (CN2) Used to connect the servo motor encoder or external encoder. Refer to table 1.1 for the compatible external encoders.	Section 3.4 "Servo Motor Instruction Manual (Vol. 3)"
(10)	Battery connector (CN4) Used to connect the battery for absolute position data backup.	Chapter 12
(11)	Battery holder Install the battery for absolute position data backup.	Section 12.2
(12)	Protective earth (PE) terminal Grounding terminal	Section 3.2 Section 3.3
(13)	Main circuit power supply connector (CNP1) Connect the input power supply.	
(14)	Rating plate	Section 1.6
(15)	Control circuit power supply connector (CNP2) Connect the control circuit power supply and regenerative option.	Section 3.2 Section 3.3
(16)	Servo motor power output connector (CNP3) Connect the servo motor.	
(17)	Charge lamp When the main circuit is charged, this will light. While this lamp is lit, do not reconnect the cables.	
(18) (Note 1, 2)	External encoder connector (CN2L) Used to connect the external encoder. Refer to table 1.1 for the compatible external encoders.	"Linear Encoder Instruction Manual"
(19)	Manufacturer setting connector (CN7) This connector is attached on MR-J4-_B4-RJ servo amplifier, but not for use. MR-J4-_B4 servo amplifier does not have this connector.	
(20)	Manufacturer setting connector (CN9) This connector is attached on MR-J4-_B4-RJ servo amplifier, but not for use. MR-J4-_B4 servo amplifier does not have this connector.	

Note 1. This is for MR-J4-_B4-RJ servo amplifier. MR-J4-_B4 servo amplifier does not have CN2L connector.

2. "External encoder" is a term for linear encoder used in the linear servo system, load-side encoder used in the fully closed loop system, and scale measurement encoder used with the scale measurement function in this manual.

(b) MR-J4-350B4(-RJ)

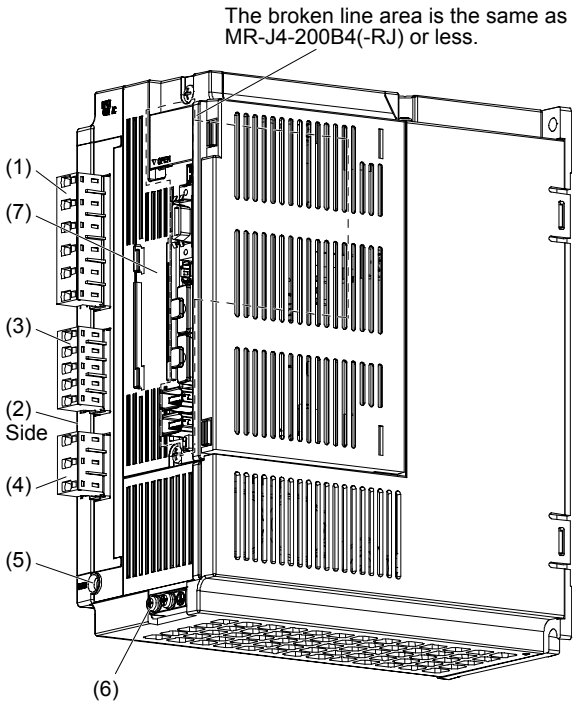

No.	Name/Application	Detailed explanation
(1)	Main circuit power supply connector (CNP1) Connect the input power supply.	Section 3.2 Section 3.3
(2)	Rating plate	Section 1.6
(3)	Control circuit power supply connector (CNP2) Connect the control circuit power supply and regenerative option.	Section 3.2 Section 3.3
(4)	Servo motor power output connector (CNP3) Connect the servo motor.	
(5)	Charge lamp When the main circuit is charged, this will light. While this lamp is lit, do not reconnect the cables.	
(6)	Protective earth (PE) terminal Grounding terminal	Section 3.2 Section 3.3
(7)	Battery holder Install the battery for absolute position data backup.	Section 12.2

(c) MR-J4-500B4(-RJ)

POINT
●The servo amplifier is shown without the front cover. For removal of the front cover, refer to section 1.7.2.

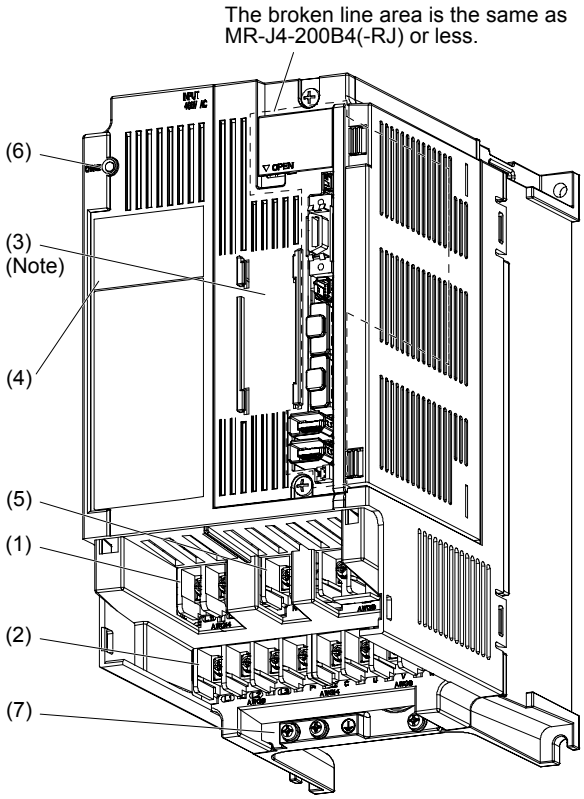

No.	Name/Application	Detailed explanation
(1)	Control circuit terminal block (TE2) Used to connect the control circuit power supply.	Section 3.2 Section 3.3
(2)	Main circuit terminal block (TE1) Connect the input power supply.	
(3)	Battery holder Install the battery for absolute position data backup.	Section 12.2
(4)	Rating plate	Section 1.6
(5)	Regenerative option/power factor improving reactor terminal block (TE3) Used to connect a regenerative option and a power factor improving DC reactor.	Section 3.2 Section 3.3
(6)	Charge lamp When the main circuit is charged, this will light. While this lamp is lit, do not reconnect the cables.	
(7)	Protective earth (PE) terminal Grounding terminal	Section 3.2 Section 3.3

Note. Lines for slots around the battery holder are omitted from the illustration.

(d) MR-J4-700B4(-RJ)

POINT

●The servo amplifier is shown without the front cover. For removal of the front cover, refer to section 1.7.2.

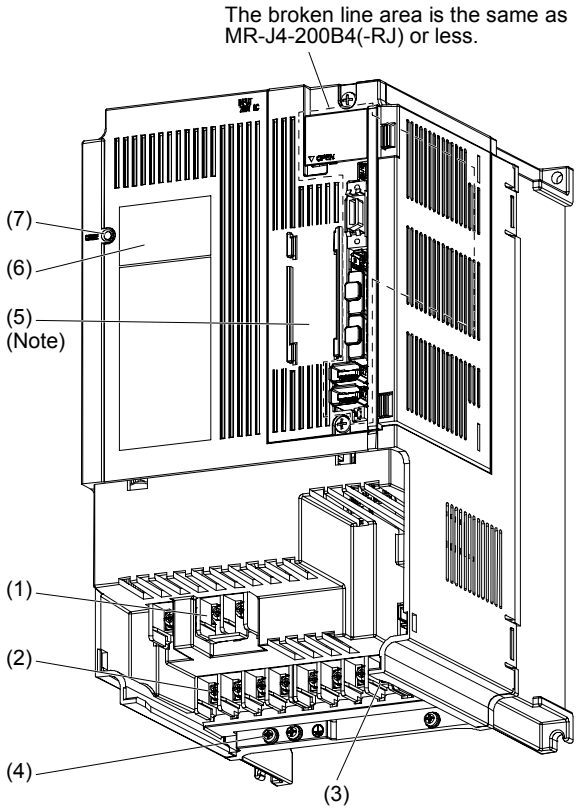

No.	Name/Application	Detailed explanation
(1)	Power factor improving reactor terminal block (TE3) Used to connect the DC reactor.	Section 3.2 Section 3.3
(2)	Main circuit terminal block (TE1) Used to connect the input power supply, regenerative option, and servo motor.	
(3)	Control circuit terminal block (TE2) Used to connect the control circuit power supply.	
(4)	Protective earth (PE) terminal Grounding terminal	
(5)	Battery holder Install the battery for absolute position data backup.	Section 12.2
(6)	Rating plate	Section 1.6
(7)	Charge lamp When the main circuit is charged, this will light. While this lamp is lit, do not reconnect the cables.	

Note. Lines for slots around the battery holder are omitted from the illustration.

(e) MR-J4-11KB4(-RJ)/MR-J4-15KB4(-RJ)

POINT

●The servo amplifier is shown without the front cover. For removal of the front cover, refer to section 1.7.2.

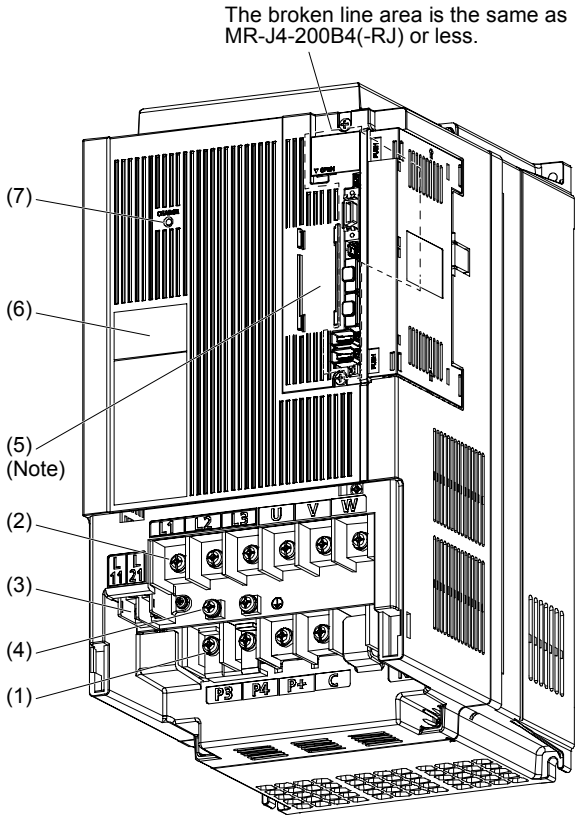

No.	Name/Application	Detailed explanation
(1)	Power factor improving reactor terminal block (TE1-2) Used to connect a power factor improving DC reactor and a regenerative option.	Section 3.2 Section 3.3
(2)	Main circuit terminal block (TE1-1) Used to connect the input power supply and servo motor.	
(3)	Control circuit terminal block (TE2) Used to connect the control circuit power supply.	
(4)	Protective earth (PE) terminal Grounding terminal	
(5)	Battery holder Install the battery for absolute position data backup.	Section 12.2
(6)	Rating plate	Section 1.6
(7)	Charge lamp When the main circuit is charged, this will light. While this lamp is lit, do not reconnect the cables.	

Note. Lines for slots around the battery holder are omitted from the illustration.

(f) MR-J4-22KB4(-RJ)

POINT

●The servo amplifier is shown without the front cover. For removal of the front cover, refer to section 1.7.2.

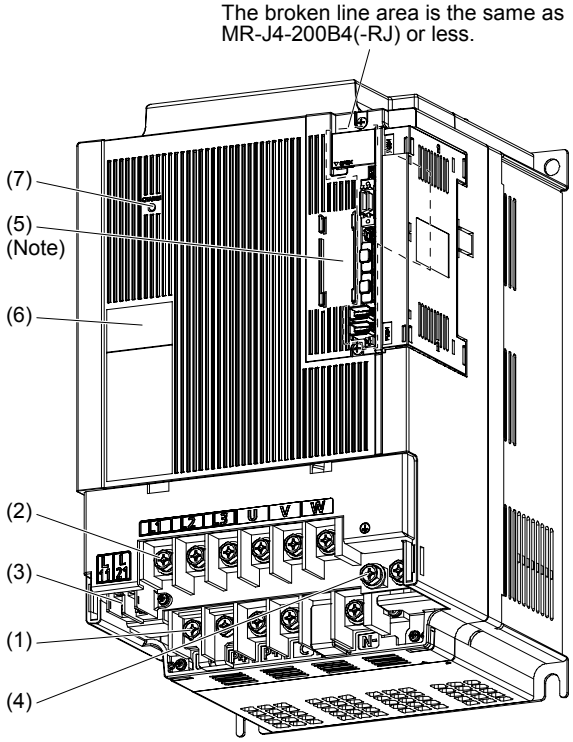

No.	Name/Application	Detailed explanation
(1)	Power factor improving reactor terminal block (TE1-2) Used to connect a power factor improving DC reactor and a regenerative option.	Section 3.2 Section 3.3
(2)	Main circuit terminal block (TE1-1) Used to connect the input power supply and servo motor.	
(3)	Control circuit terminal block (TE2) Used to connect the control circuit power supply.	
(4)	Protective earth (PE) terminal Grounding terminal	
(5)	Battery holder Install the battery for absolute position data backup.	Section 12.2
(6)	Rating plate	Section 1.6
(7)	Charge lamp When the main circuit is charged, this will light. While this lamp is lit, do not reconnect the cables.	

Note. Lines for slots around the battery holder are omitted from the illustration.

(3) 100 V class

The diagram is for MR-J4-10B1-RJ.

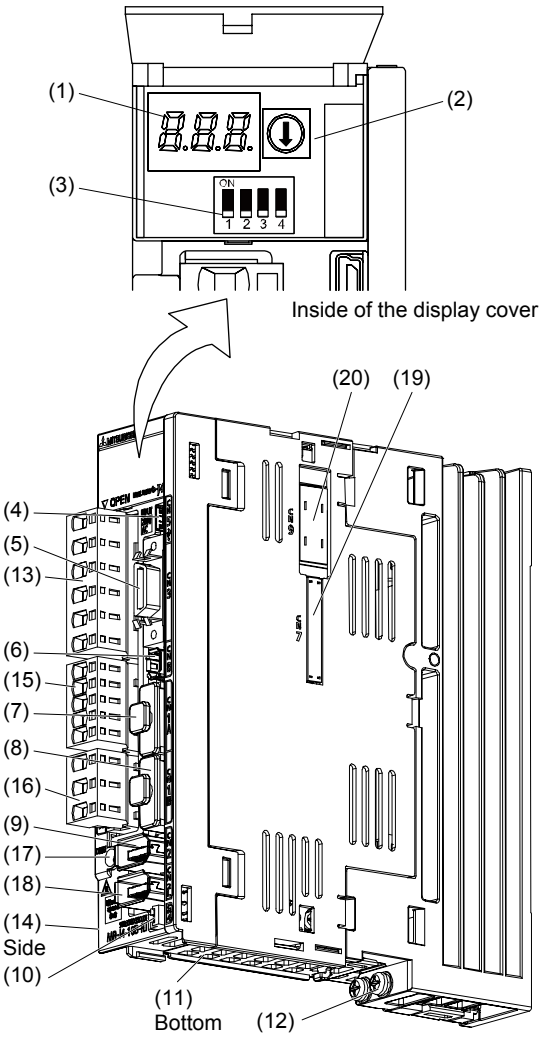

No.	Name/Application	Detailed explanation
(1)	Display The 3-digit, seven-segment LED shows the servo status and the alarm number.	Section 4.3
(2)	Axis selection rotary switch (SW1) Used to set the axis No. of servo amplifier.	
(3)	Control axis setting switch (SW2) The test operation switch, the control axis deactivation setting switch, and the auxiliary axis number setting switch are available.	
(4)	USB communication connector (CN5) Connect with the personal computer.	Section 11.7
(5)	I/O signal connector (CN3) Used to connect digital I/O signals.	Section 3.2 Section 3.4
(6)	STO input signal connector (CN8) Used to connect MR-J3-D05 safety logic unit and external safety relay.	Chapter 13 App. 5
(7)	SSCNET III cable connector (CN1A) Used to connect the servo system controller or the previous axis servo amplifier.	Section 3.2 Section 3.4
(8)	SSCNET III cable connector (CN1B) Used to connect the next axis servo amplifier. For the final axis, put a cap.	
(9) (Note 2)	Encoder connector (CN2) Used to connect the servo motor encoder. Used to connect the servo motor encoder or external encoder. Refer to table 1.1 for the compatible external encoders.	Section 3.4 "Servo Motor Instruction Manual (Vol. 3)"
(10)	Battery connector (CN4) Used to connect the battery for absolute position data backup.	Chapter 12
(11)	Battery holder Install the battery for absolute position data backup.	Section 12.2
(12)	Protective earth (PE) terminal Grounding terminal	Section 3.1 Section 3.3
(13)	Main circuit power supply connector (CNP1) Connect the input power supply.	
(14)	Rating plate	Section 1.6
(15)	Control circuit power supply connector (CNP2) Connect the control circuit power supply and regenerative option.	Section 3.1 Section 3.3
(16)	Servo motor power output connector (CNP3) Connect the servo motor.	
(17)	Charge lamp When the main circuit is charged, this will light. While this lamp is lit, do not reconnect the cables.	
(18) (Note 1, 2)	External encoder connector (CN2L) Refer to table 1.1 for connections of external encoders.	"Linear Encoder Instruction Manual"
(19)	Manufacturer setting connector (CN7) This connector is attached on MR-J4-_B1-RJ servo amplifier, but not for use. MR-J4-_B1 servo amplifier does not have this connector.	
(20)	Manufacturer setting connector (CN9) This connector is attached on MR-J4-_B1-RJ servo amplifier, but not for use. MR-J4-_B1 servo amplifier does not have this connector.	

Note 1. This is for MR-J4-_B1-RJ servo amplifier. MR-J4-_B1 servo amplifier does not have CN2L connector.

2. "External encoder" is a term for linear encoder used in the linear servo system, load-side encoder used in the fully closed loop system, and scale measurement encoder used with the scale measurement function in this manual.

1.7.2 Removal and reinstallation of the front cover

⚠CAUTION	●Before removing or installing the front cover, turn off the power and wait for 15 minutes or more until the charge lamp turns off. Then, confirm that the voltage between P+ and N- is safe with a voltage tester and others. Otherwise, an electric shock may occur. In addition, when confirming whether the charge lamp is off or not, always confirm it from the front of the servo amplifier.

The following shows how to remove and reinstall the front cover of MR-J4-700B(-RJ) to MR-J4-22KB(-RJ) and MR-J4-500B4(-RJ) to MR-J4-22KB4(-RJ).
The diagram is for MR-J4-700B.

Removal of the front cover

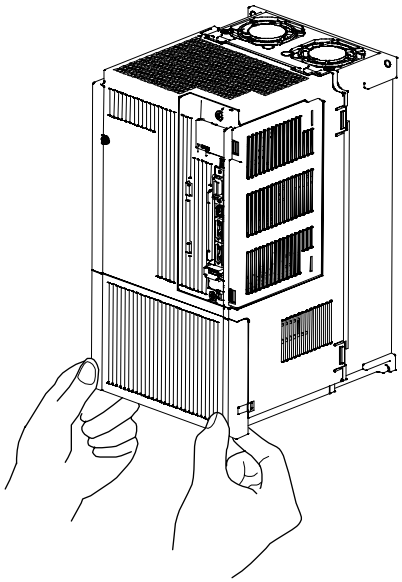

1) Hold the ends of lower side of the front cover with both hands.

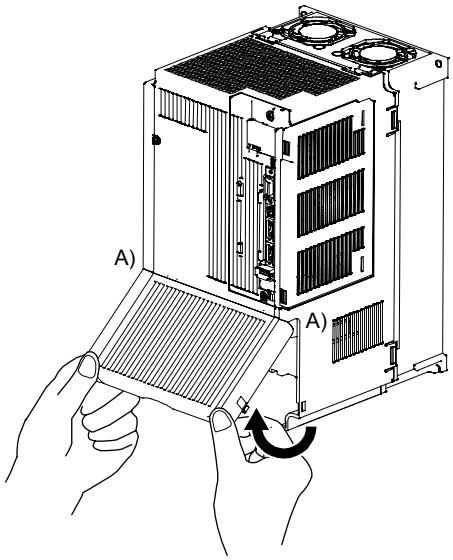

2) Pull up the cover, supporting at point A).

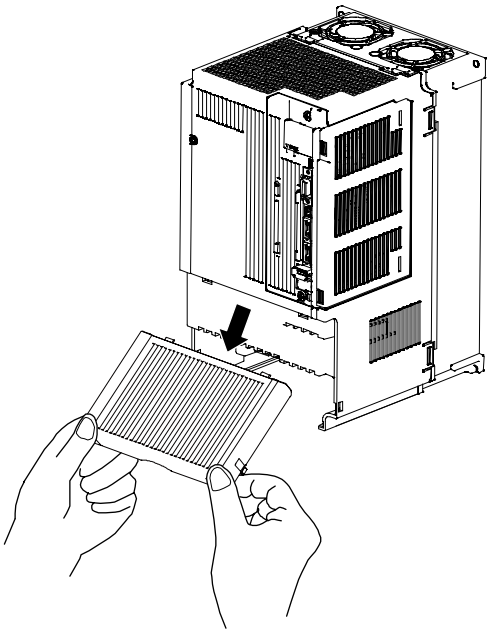

3) Pull out the front cover to remove. Hold the ends of lower side of the front cover with both hands.

Reinstallation of the front cover

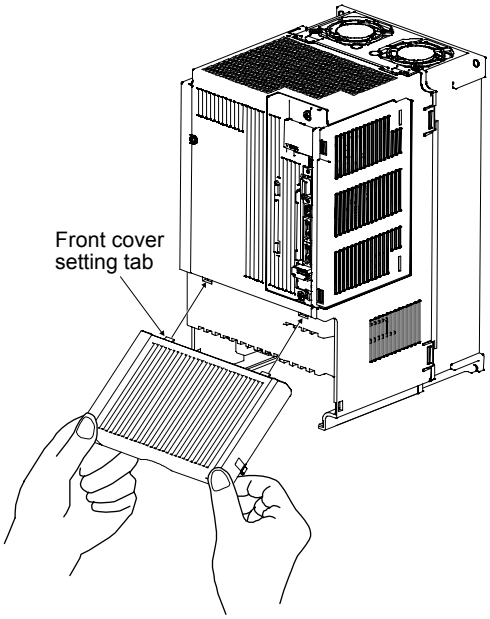

1) Insert the front cover setting tabs into the sockets of servo amplifier (2 places).

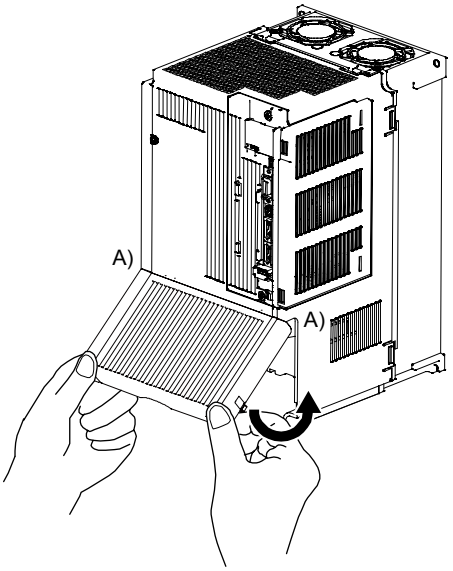

2) Push down the cover, supporting at point A).

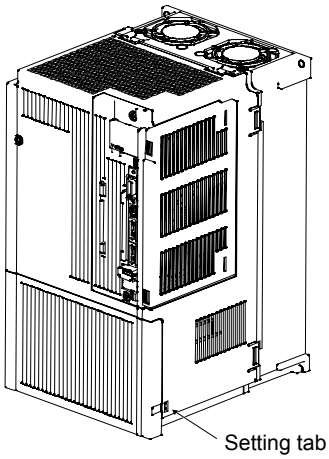

3) Press the cover against the terminal box until the installing knobs click.

1.8 Configuration including peripheral equipment

⚠CAUTION ●Connecting a servo motor of the wrong axis to U, V, W, or CN2 of the servo amplifier may cause a malfunction.

POINT

●Equipment other than the servo amplifier and servo motor are optional or recommended products.

(1) 200 V class

(a) MR-J4-200B(-RJ) or less

The diagram is for MR-J4-20B-RJ.

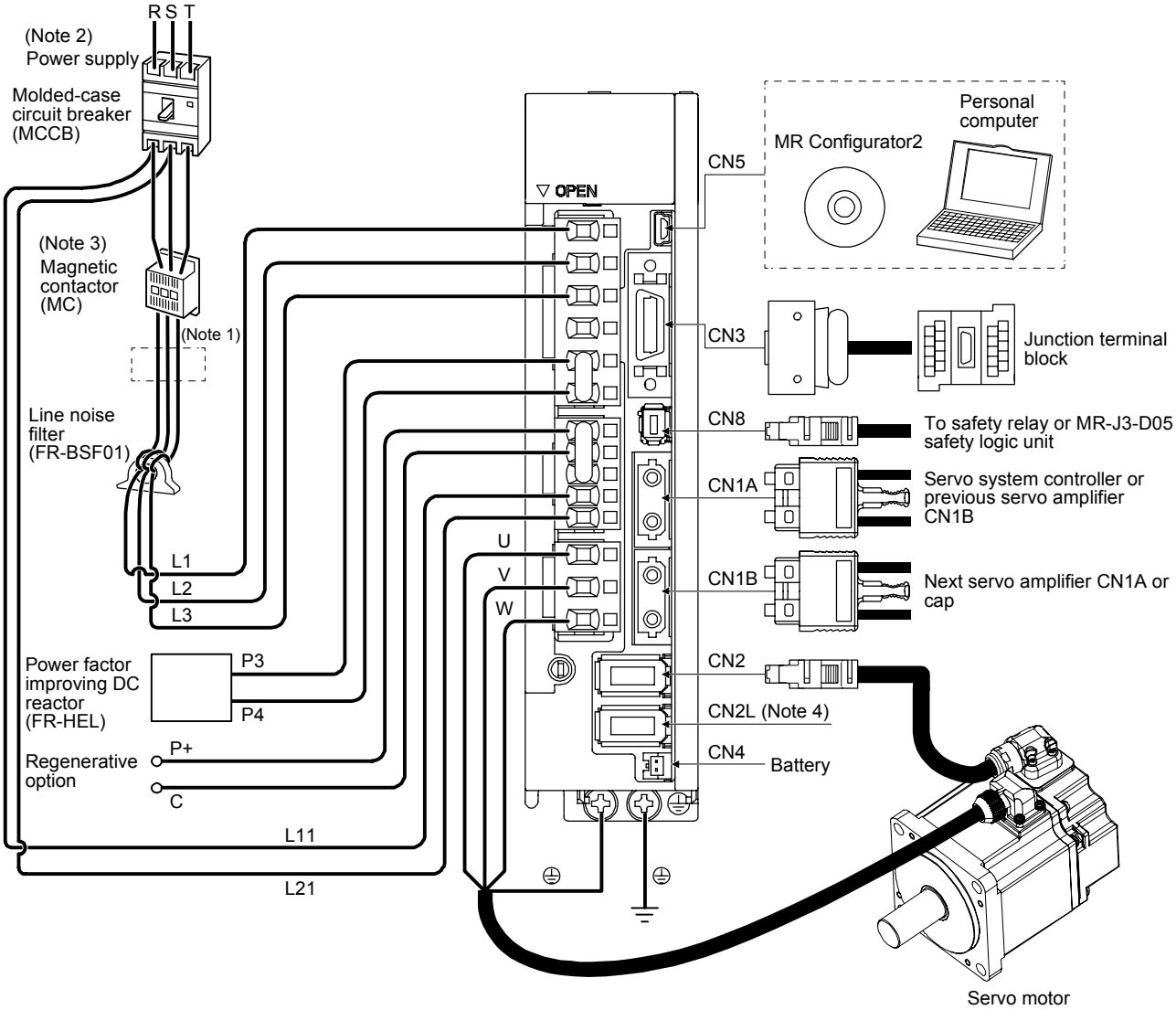

Note 1. The power factor improving AC reactor can also be used. In this case, the power factor improving DC reactor cannot be used. When not using the power factor improving DC reactor, short P3 and P4.

2. A 1-phase 200 V AC to 240 V AC power supply may be used with the servo amplifier of MR-J4-70B(-RJ) or less. For 1-phase 200 V AC to 240 V AC, connect the power supply to L1 and L3. Leave L2 open. Refer to section 1.3 for the power supply specifications.

3. Depending on the main circuit voltage and operation pattern, bus voltage decreases, and that may cause the forced stop deceleration to shift to the dynamic brake deceleration. When dynamic brake deceleration is not required, slow the time to turn off the magnetic contactor.

4. This is for MR-J4-_B-RJ servo amplifier. MR-J4-_B servo amplifier does not have CN2L connector. When using MR-J4-_B-RJ servo amplifier in the linear servo system or in the fully closed loop system, connect an external encoder to this connector. Refer to table 1.1 and "Linear Encoder Instruction Manual" for the compatible external encoders.

(b) MR-J4-350B(-RJ)

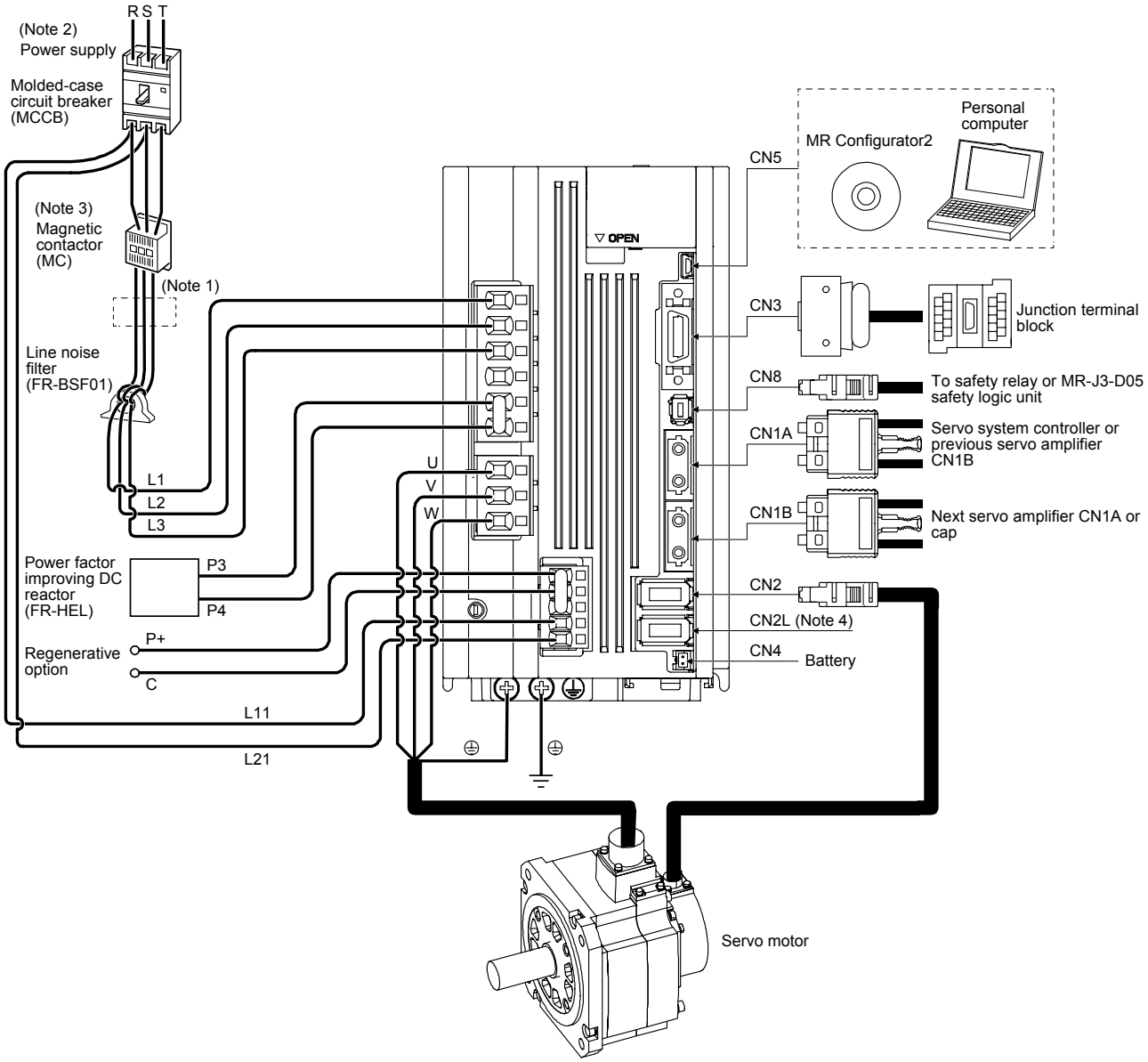

Note 1. The power factor improving AC reactor can also be used. In this case, the power factor improving DC reactor cannot be used. When not using the power factor improving DC reactor, short P3 and P4.

2. Refer to section 1.3 for the power supply specifications.

3. Depending on the main circuit voltage and operation pattern, bus voltage decreases, and that may cause the forced stop deceleration to shift to the dynamic brake deceleration. When dynamic brake deceleration is not required, slow the time to turn off the magnetic contactor.

4. This is for MR-J4-_B-RJ servo amplifier. MR-J4-_B servo amplifier does not have CN2L connector. When using MR-J4-_B-RJ servo amplifier in the linear servo system or in the fully closed loop system, connect an external encoder to this connector. Refer to table 1.1 and "Linear Encoder Instruction Manual" for the compatible external encoders.

(c) MR-J4-500B(-RJ)

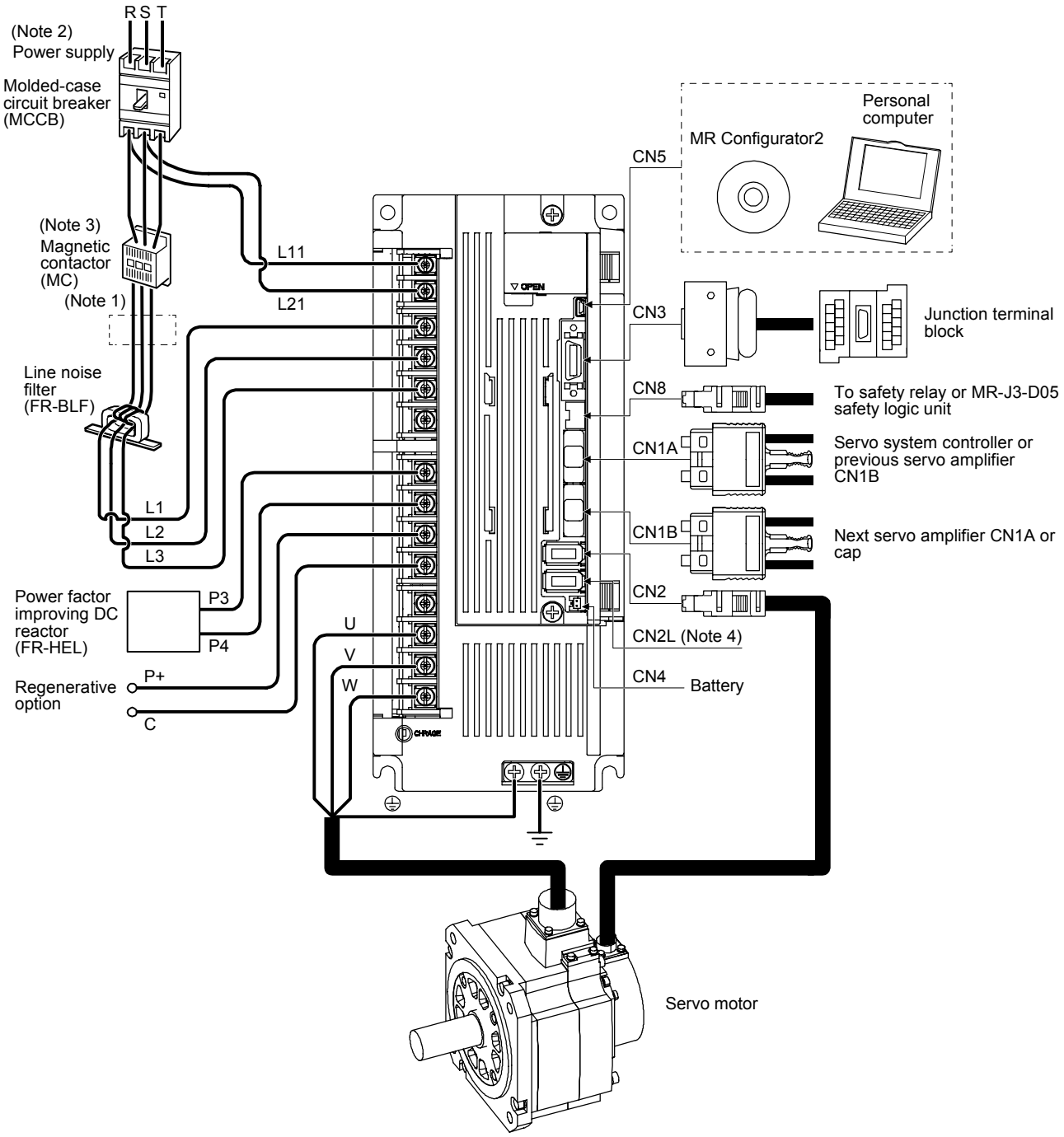

Note 1. The power factor improving AC reactor can also be used. In this case, the power factor improving DC reactor cannot be used. When not using the power factor improving DC reactor, short P3 and P4.

2. Refer to section 1.3 for the power supply specifications.

3. Depending on the main circuit voltage and operation pattern, bus voltage decreases, and that may cause the forced stop deceleration to shift to the dynamic brake deceleration. When dynamic brake deceleration is not required, slow the time to turn off the magnetic contactor.

4. This is for MR-J4-_B-RJ servo amplifier. MR-J4-_B servo amplifier does not have CN2L connector. When using MR-J4-_B-RJ servo amplifier in the linear servo system or in the fully closed loop system, connect an external encoder to this connector. Refer to table 1.1 and "Linear Encoder Instruction Manual" for the compatible external encoders.

(d) MR-J4-700B(-RJ)

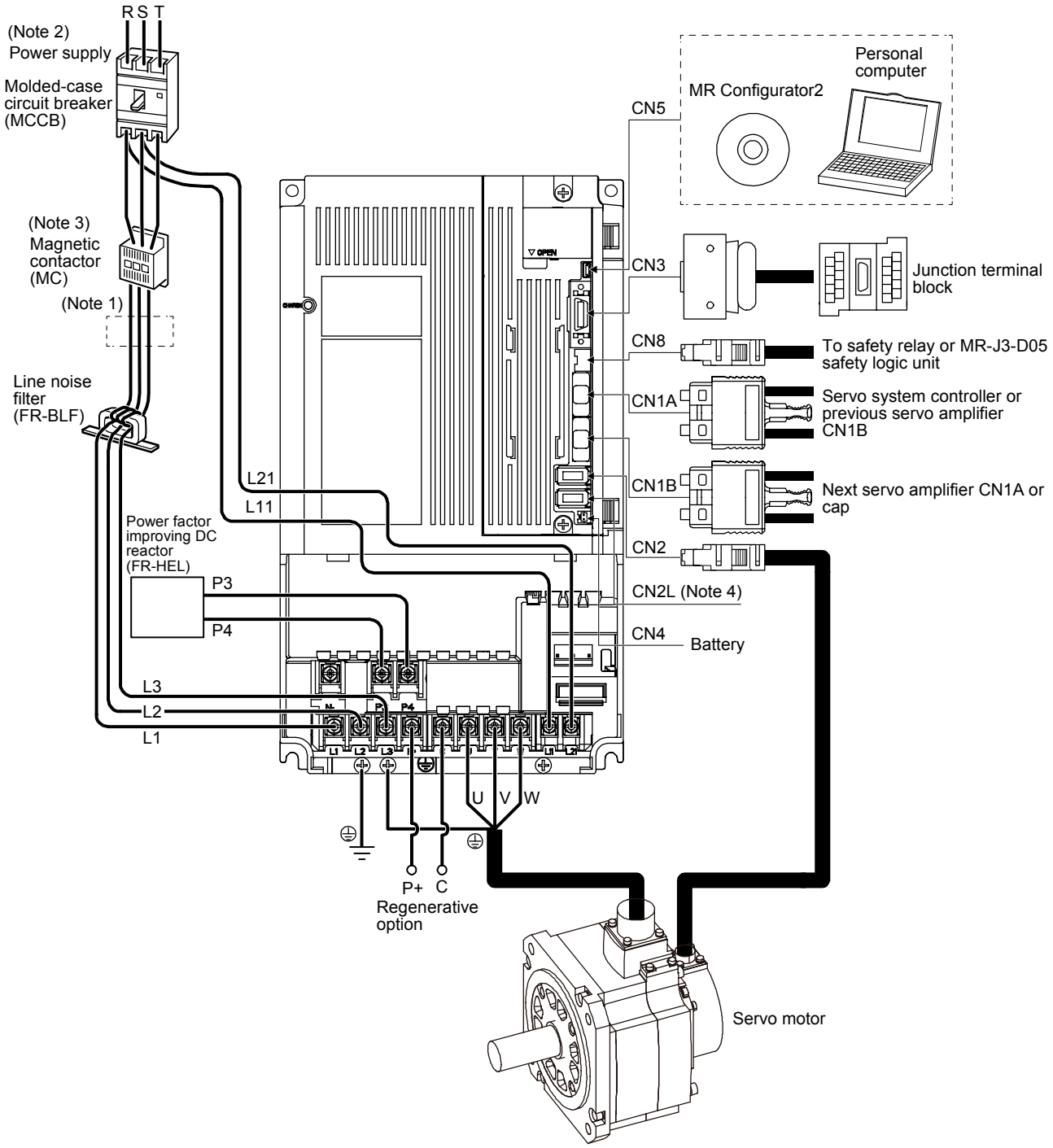

Note 1. The power factor improving AC reactor can also be used. In this case, the power factor improving DC reactor cannot be used. When not using the power factor improving DC reactor, short P3 and P4.

2. Refer to section 1.3 for the power supply specifications.

3. Depending on the main circuit voltage and operation pattern, bus voltage decreases, and that may cause the forced stop deceleration to shift to the dynamic brake deceleration. When dynamic brake deceleration is not required, slow the time to turn off the magnetic contactor.

4. This is for MR-J4-_B-RJ servo amplifier. MR-J4-_B servo amplifier does not have CN2L connector. When using MR-J4-_B-RJ servo amplifier in the linear servo system or in the fully closed loop system, connect an external encoder to this connector. Refer to table 1.1 and "Linear Encoder Instruction Manual" for the compatible external encoders.

(e) MR-J4-11KB(-RJ)/MR-J4-15KB(-RJ)

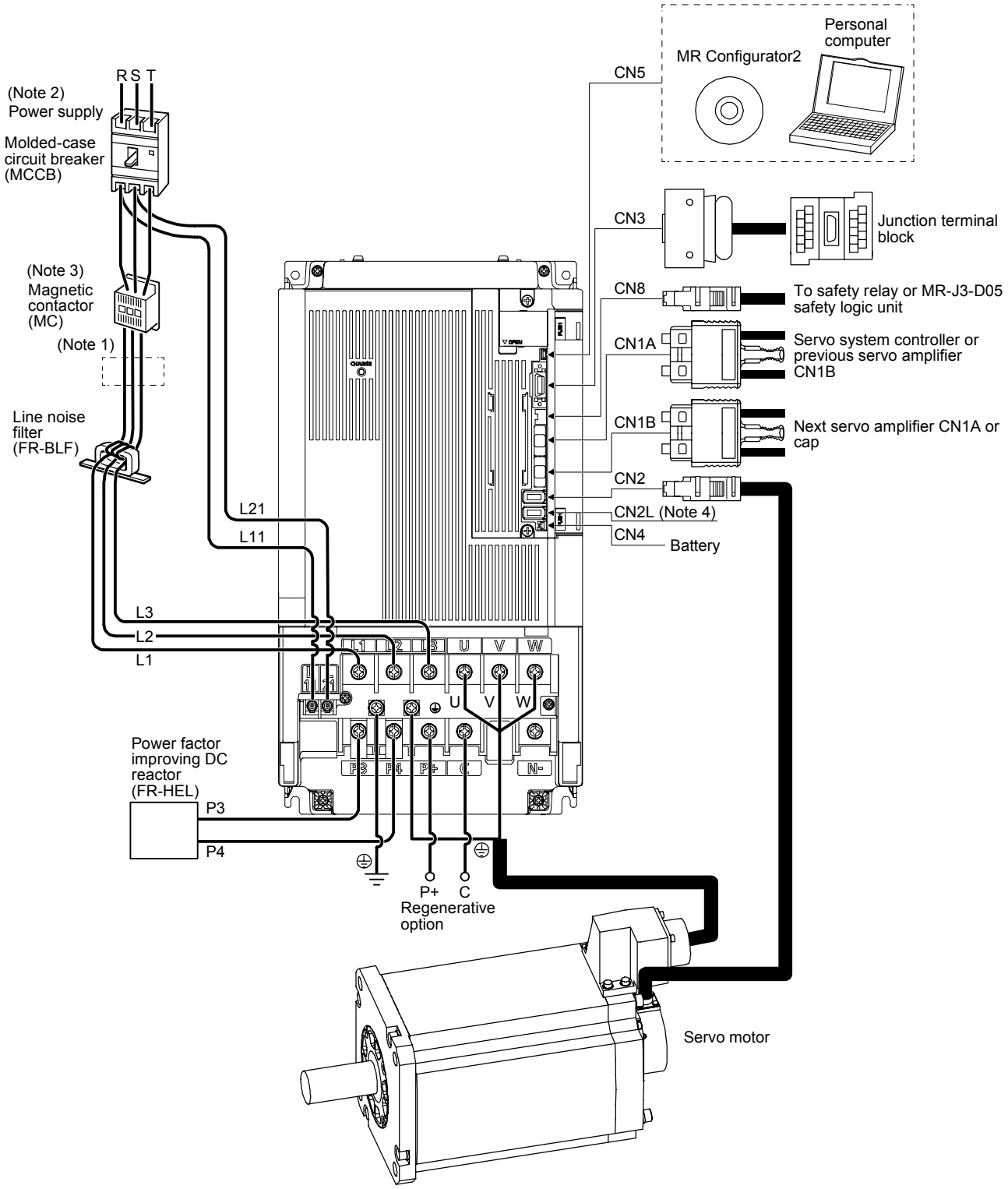

Note 1. The power factor improving AC reactor can also be used. In this case, the power factor improving DC reactor cannot be used. When not using the power factor improving DC reactor, short P3 and P4.

2. Refer to section 1.3 for the power supply specifications.

3. Depending on the main circuit voltage and operation pattern, bus voltage decreases, and that may cause the forced stop deceleration to shift to the dynamic brake deceleration. When dynamic brake deceleration is not required, slow the time to turn off the magnetic contactor.

4. This is for MR-J4-_B-RJ servo amplifier. MR-J4-_B servo amplifier does not have CN2L connector. When using MR-J4-_B-RJ servo amplifier in the linear servo system or in the fully closed loop system, connect an external encoder to this connector. Refer to table 1.1 and "Linear Encoder Instruction Manual" for the compatible external encoders.

(f) MR-J4-22KB(-RJ)

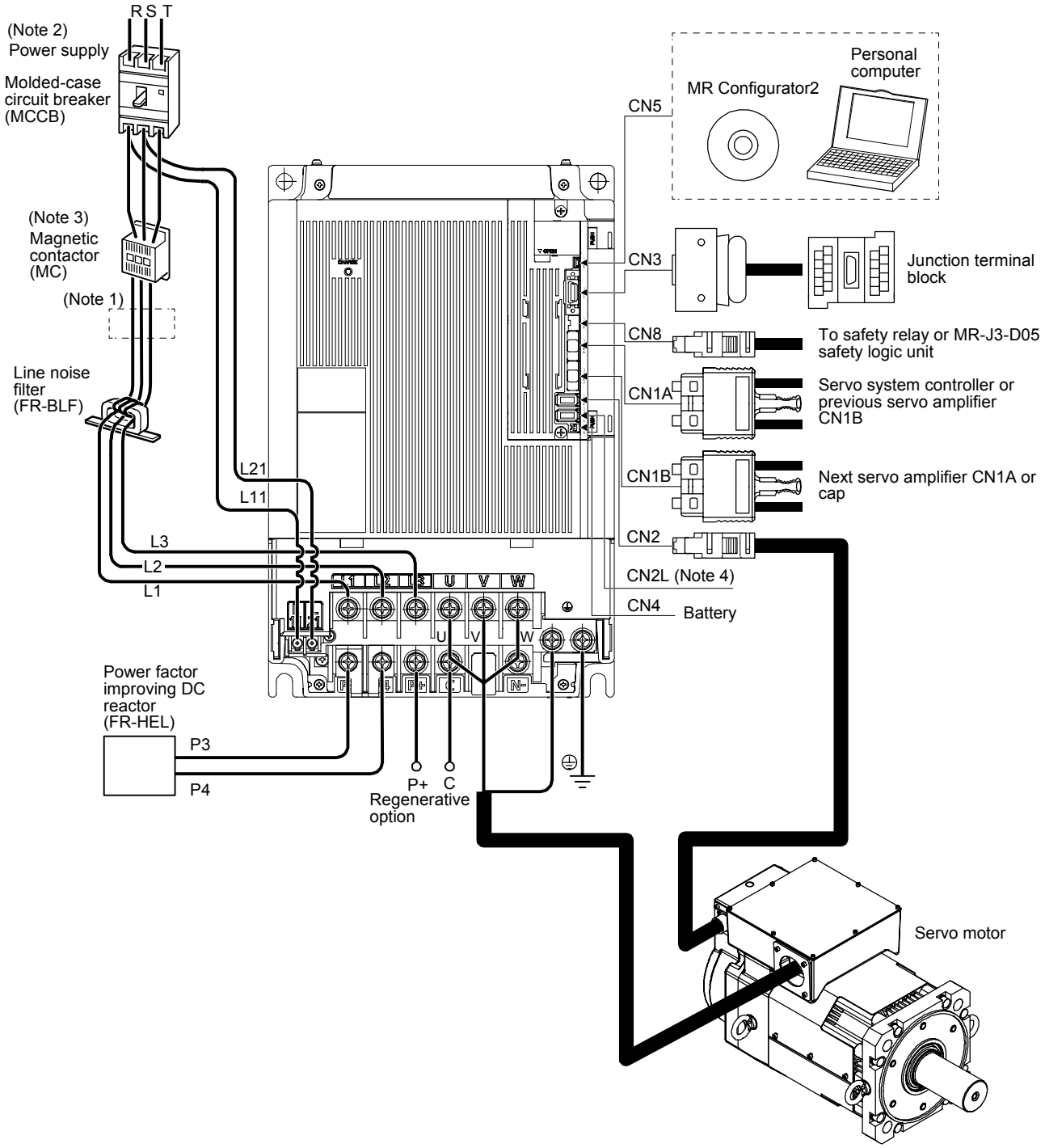

Note 1. The power factor improving AC reactor can also be used. In this case, the power factor improving DC reactor cannot be used. When not using the power factor improving DC reactor, short P3 and P4.

2. Refer to section 1.3 for the power supply specifications.

3. Depending on the main circuit voltage and operation pattern, bus voltage decreases, and that may cause the forced stop deceleration to shift to the dynamic brake deceleration. When dynamic brake deceleration is not required, slow the time to turn off the magnetic contactor.

4. This is for MR-J4-_B-RJ servo amplifier. MR-J4-_B servo amplifier does not have CN2L connector. When using MR-J4-_B-RJ servo amplifier in the linear servo system or in the fully closed loop system, connect an external encoder to this connector. Refer to table 1.1 and "Linear Encoder Instruction Manual" for the compatible external encoders.

(2) 400 V class

(a) MR-J4-200B4(-RJ) or less

The diagram is for MR-J4-60B4-RJ and MR-J4-100B4-RJ.

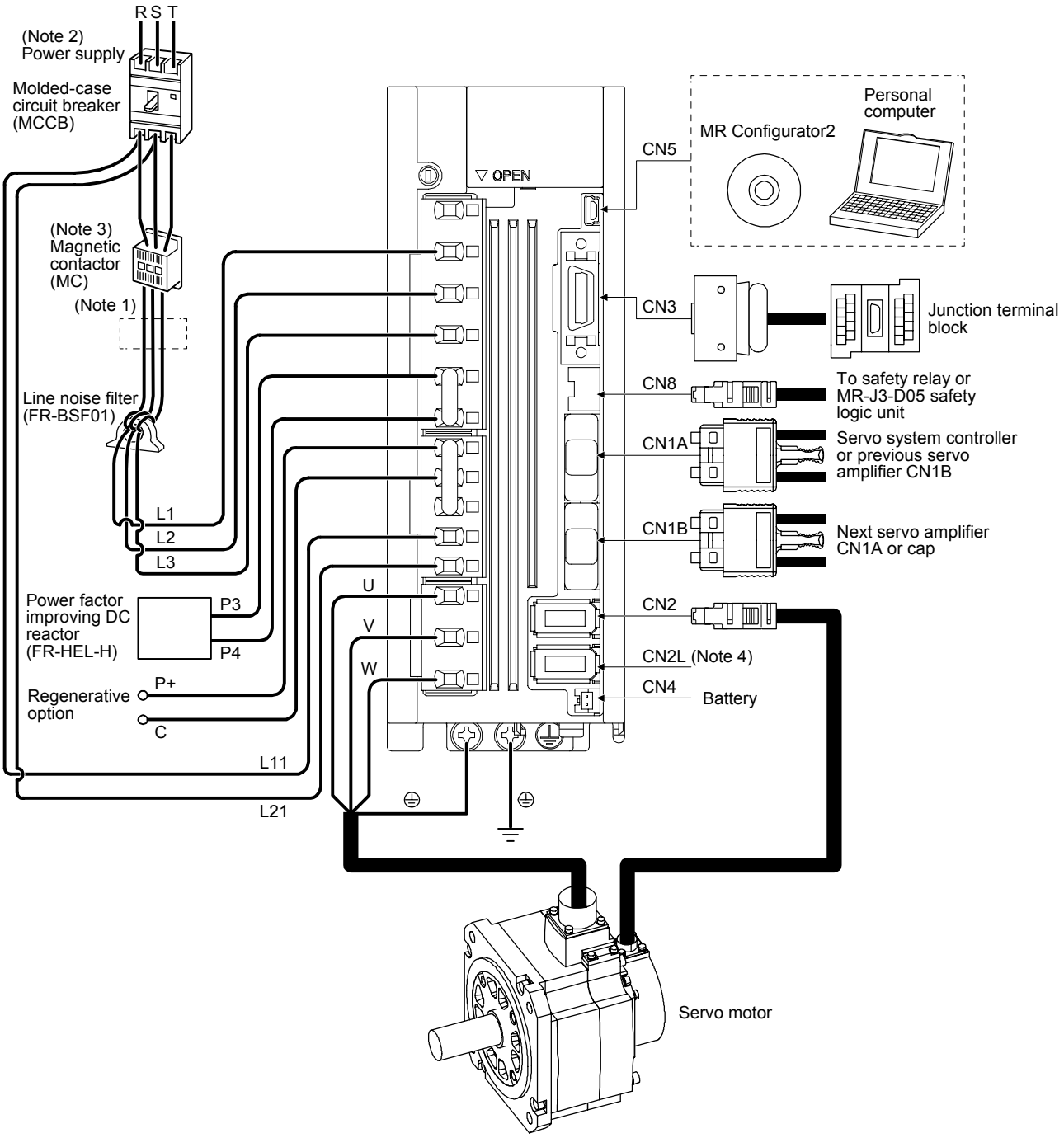

Note 1. The power factor improving AC reactor can also be used. In this case, the power factor improving DC reactor cannot be used. When not using the power factor improving DC reactor, short P3 and P4.

2. Refer to section 1.3 for the power supply specification.

3. Depending on the main circuit voltage and operation pattern, bus voltage decreases, and that may cause the forced stop deceleration to shift to the dynamic brake deceleration. When dynamic brake deceleration is not required, slow the time to turn off the magnetic contactor.

4. This is for MR-J4-_B4-RJ servo amplifier. MR-J4-_B4 servo amplifier does not have CN2L connector. When using MR-J4-_B4-RJ servo amplifier in the linear servo system or in the fully closed loop system, connect an external encoder to this connector. Refer to Table 1.1 and "Linear Encoder Instruction Manual" for the compatible external encoders.

(b) MR-J4-350B4(-RJ)

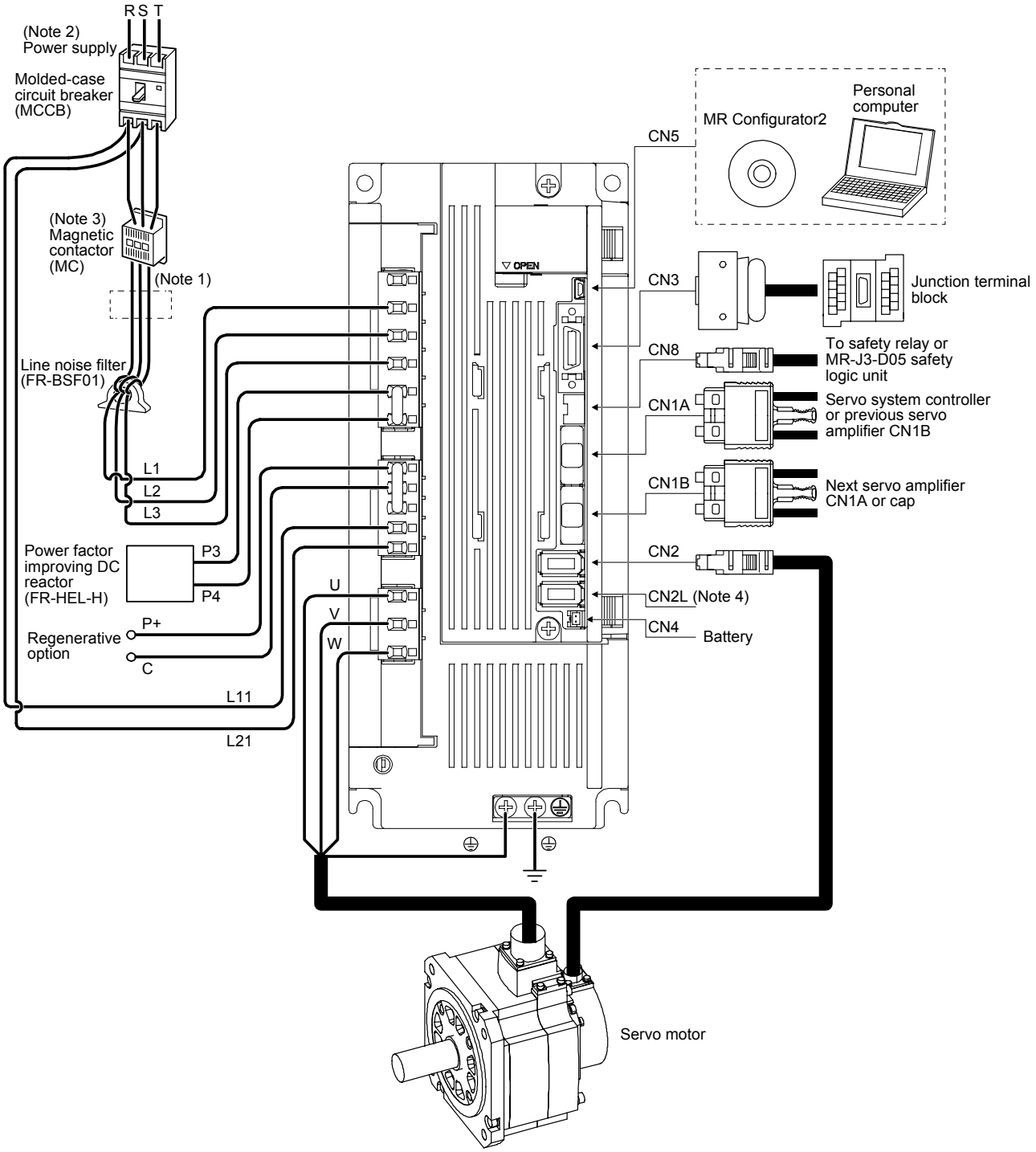

Note 1. The power factor improving AC reactor can also be used. In this case, the power factor improving DC reactor cannot be used. When not using the power factor improving DC reactor, short P3 and P4.

2. Refer to section 1.3 for the power supply specification.

3. Depending on the main circuit voltage and operation pattern, bus voltage decreases, and that may cause the forced stop deceleration to shift to the dynamic brake deceleration. When dynamic brake deceleration is not required, slow the time to turn off the magnetic contactor.

4. This is for MR-J4-_B4-RJ servo amplifier. MR-J4-_B4 servo amplifier does not have CN2L connector. When using MR-J4-_B4-RJ servo amplifier in the linear servo system or in the fully closed loop system, connect an external encoder to this connector. Refer to Table 1.1 and "Linear Encoder Instruction Manual" for the compatible external encoders.

(c) MR-J4-500B4(-RJ)

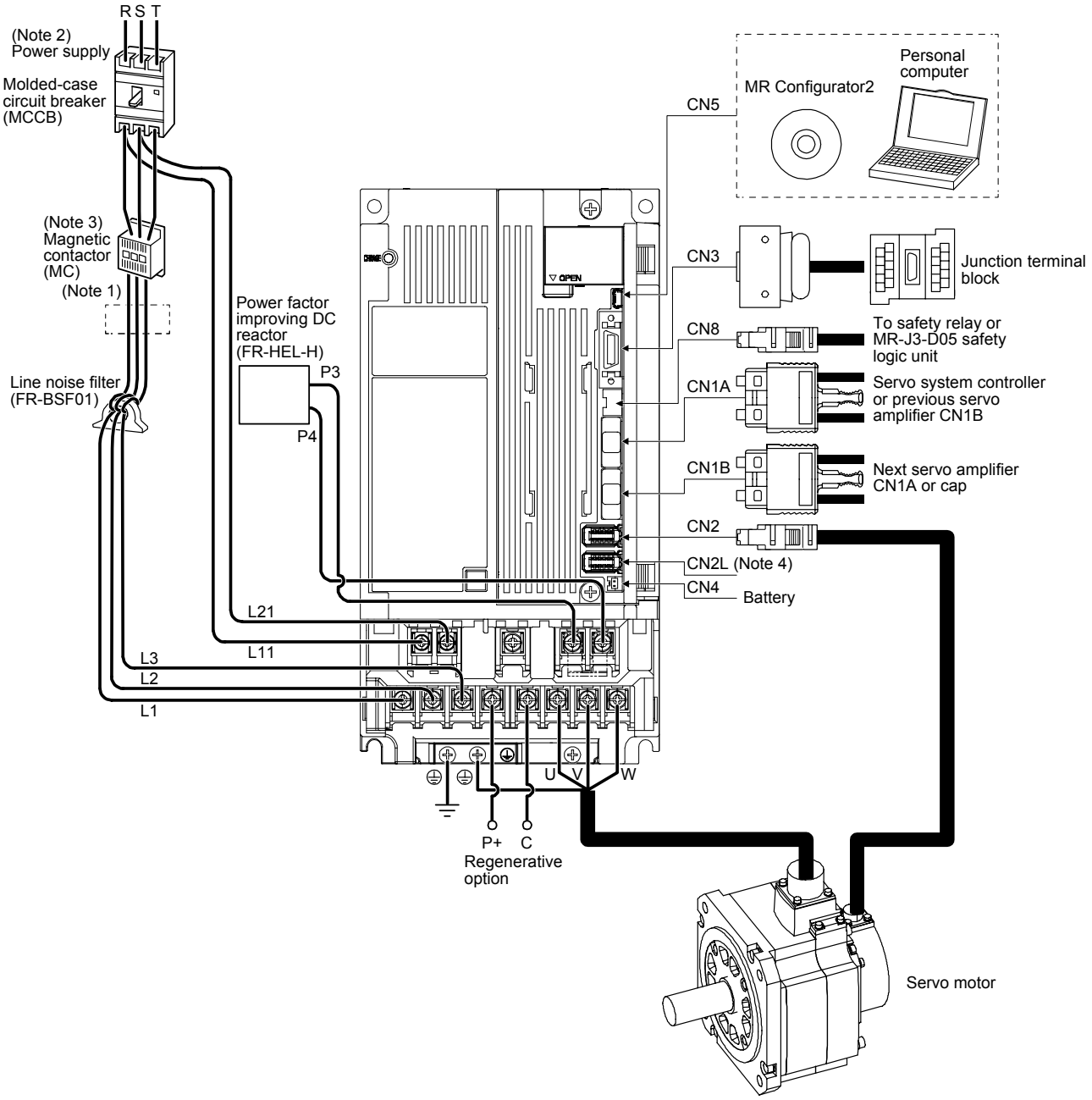

Note 1. The power factor improving AC reactor can also be used. In this case, the power factor improving DC reactor cannot be used. When not using the power factor improving DC reactor, short P3 and P4.

2. Refer to section 1.3 for the power supply specification.

3. Depending on the main circuit voltage and operation pattern, bus voltage decreases, and that may cause the forced stop deceleration to shift to the dynamic brake deceleration. When dynamic brake deceleration is not required, slow the time to turn off the magnetic contactor.

4. This is for MR-J4-_B4-RJ servo amplifier. MR-J4-_B4 servo amplifier does not have CN2L connector. When using MR-J4-_B4-RJ servo amplifier in the linear servo system or in the fully closed loop system, connect an external encoder to this connector. Refer to Table 1.1 and "Linear Encoder Instruction Manual" for the compatible external encoders.

(d) MR-J4-700B4(-RJ)

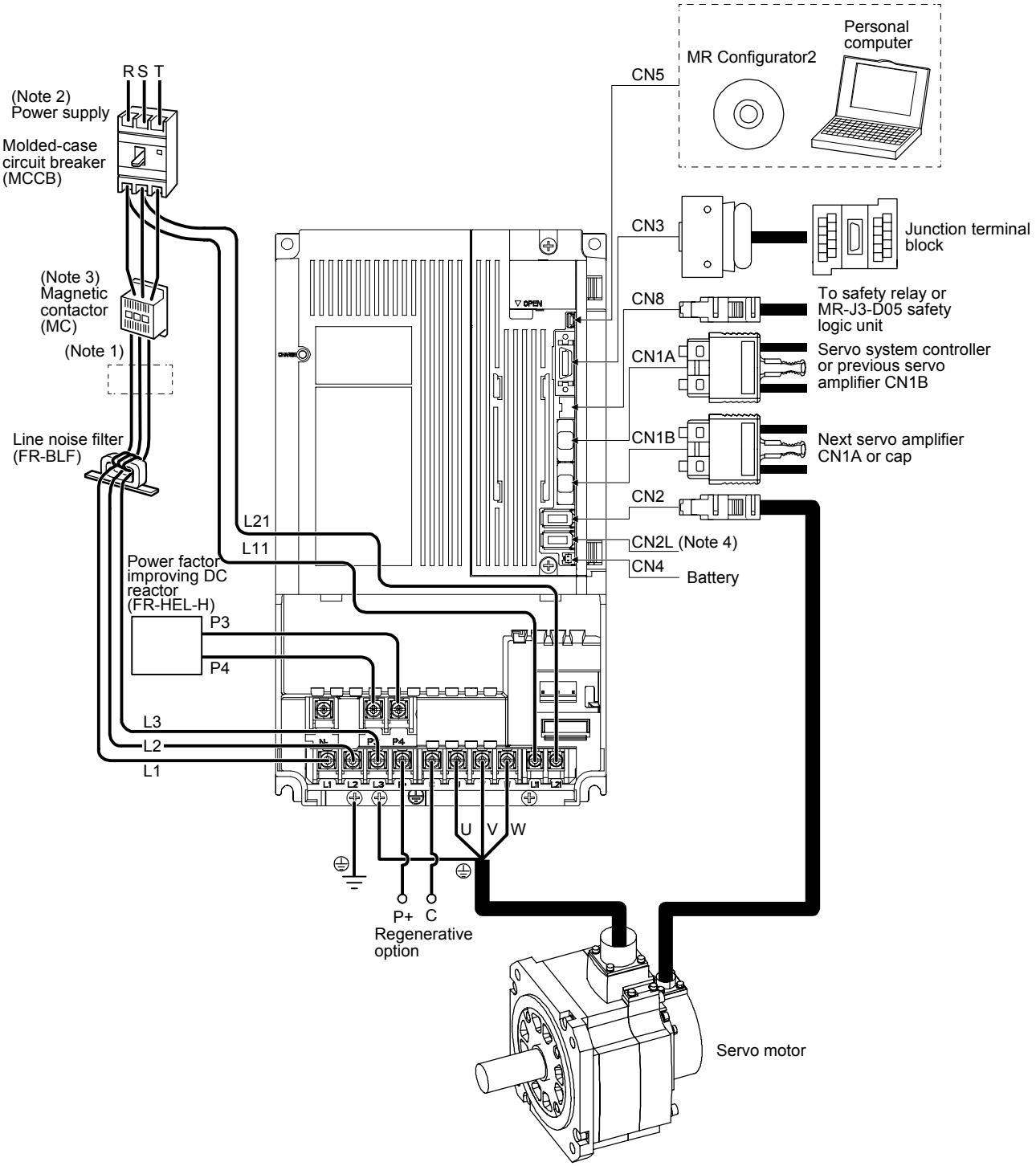

Note 1. The power factor improving AC reactor can also be used. In this case, the power factor improving DC reactor cannot be used. When not using the power factor improving DC reactor, short P3 and P4.

2. Refer to section 1.3 for the power supply specification.

3. Depending on the main circuit voltage and operation pattern, bus voltage decreases, and that may cause the forced stop deceleration to shift to the dynamic brake deceleration. When dynamic brake deceleration is not required, slow the time to turn off the magnetic contactor.

4. This is for MR-J4-_B4-RJ servo amplifier. MR-J4-_B4 servo amplifier does not have CN2L connector. When using MR-J4-_B4-RJ servo amplifier in the linear servo system or in the fully closed loop system, connect an external encoder to this connector. Refer to Table 1.1 and "Linear Encoder Instruction Manual" for the compatible external encoders.

(e) MR-J4-11K4B(-RJ)/MR-J4-15K4B(-RJ)

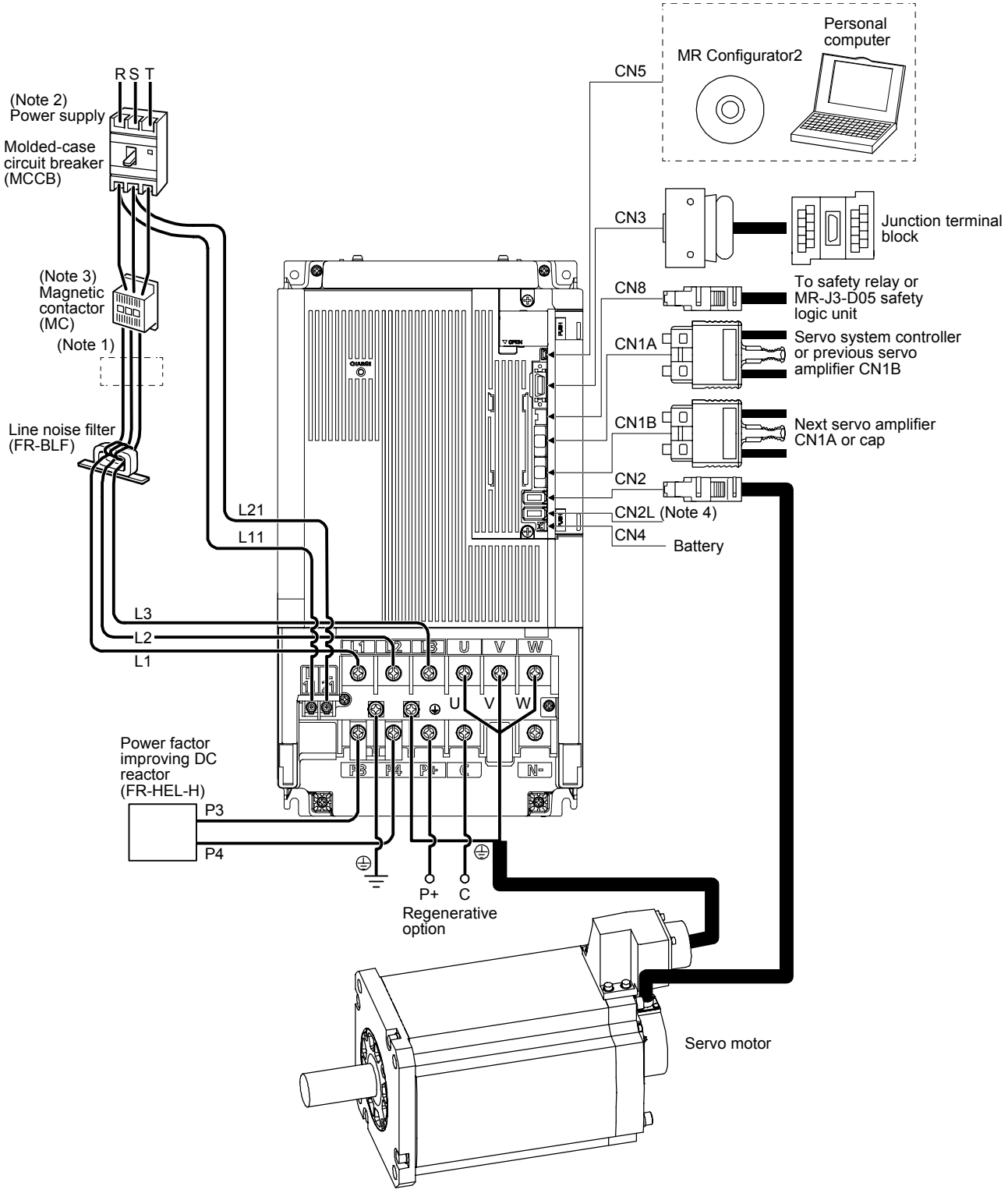

Note 1. The power factor improving AC reactor can also be used. In this case, the power factor improving DC reactor cannot be used. When not using the power factor improving DC reactor, short P3 and P4.

2. Refer to section 1.3 for the power supply specification.

3. Depending on the main circuit voltage and operation pattern, bus voltage decreases, and that may cause the forced stop deceleration to shift to the dynamic brake deceleration. When dynamic brake deceleration is not required, slow the time to turn off the magnetic contactor.

4. This is for MR-J4-_B4-RJ servo amplifier. MR-J4-_B4 servo amplifier does not have CN2L connector. When using MR-J4-_B4-RJ servo amplifier in the linear servo system or in the fully closed loop system, connect an external encoder to this connector. Refer to Table 1.1 and "Linear Encoder Instruction Manual" for the compatible external encoders.

(f) MR-J4-22K4B(-RJ)

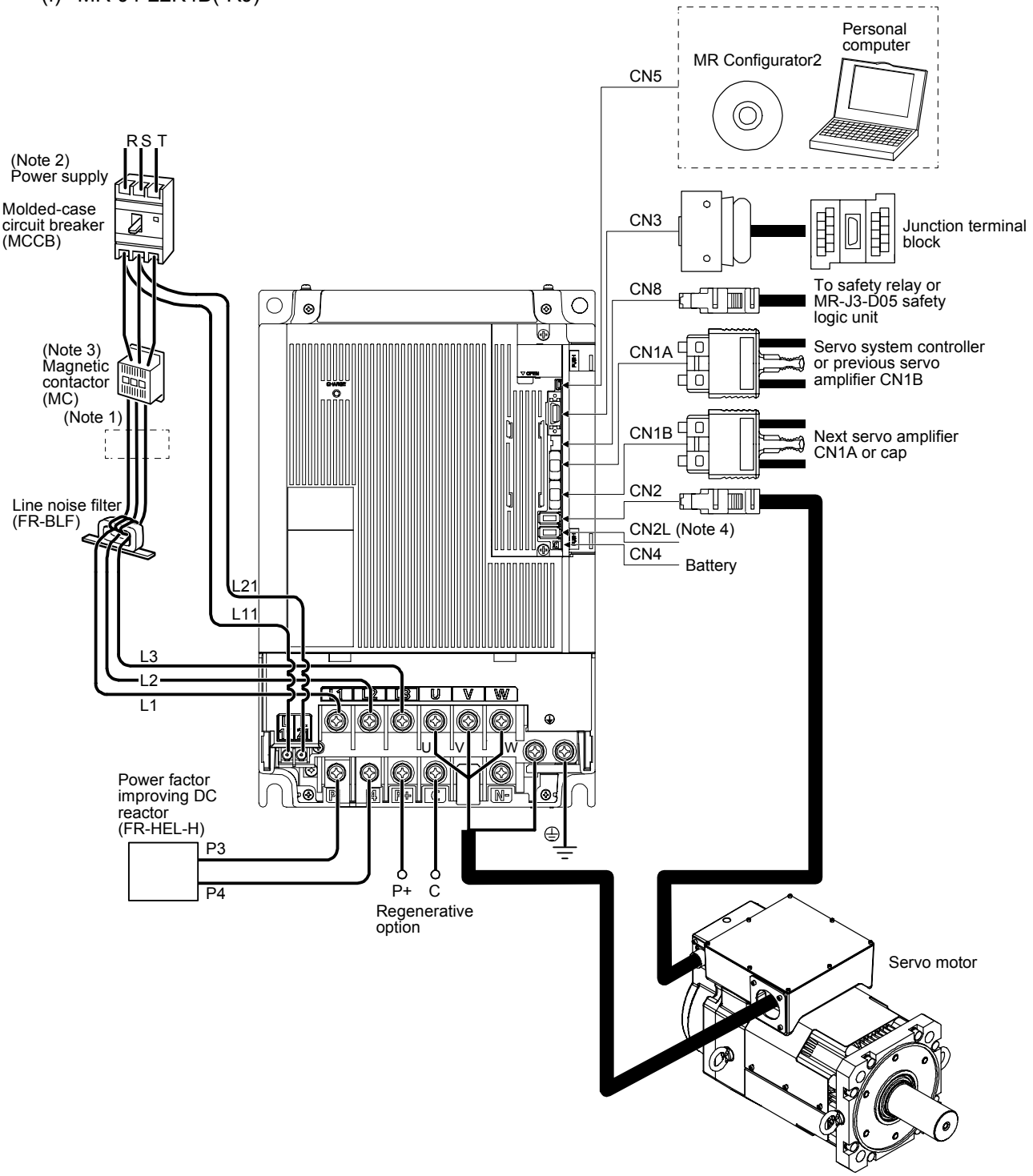

Note 1. The power factor improving AC reactor can also be used. In this case, the power factor improving DC reactor cannot be used. When not using the power factor improving DC reactor, short P3 and P4.

2. Refer to section 1.3 for the power supply specification.

3. Depending on the main circuit voltage and operation pattern, bus voltage decreases, and that may cause the forced stop deceleration to shift to the dynamic brake deceleration. When dynamic brake deceleration is not required, slow the time to turn off the magnetic contactor.

4. This is for MR-J4-_B4-RJ servo amplifier. MR-J4-_B4 servo amplifier does not have CN2L connector. When using MR-J4-_B4-RJ servo amplifier in the linear servo system or in the fully closed loop system, connect an external encoder to this connector. Refer to Table 1.1 and "Linear Encoder Instruction Manual" for the compatible external encoders.

(3) 100 V class

The diagram is for MR-J4-20B1-RJ.

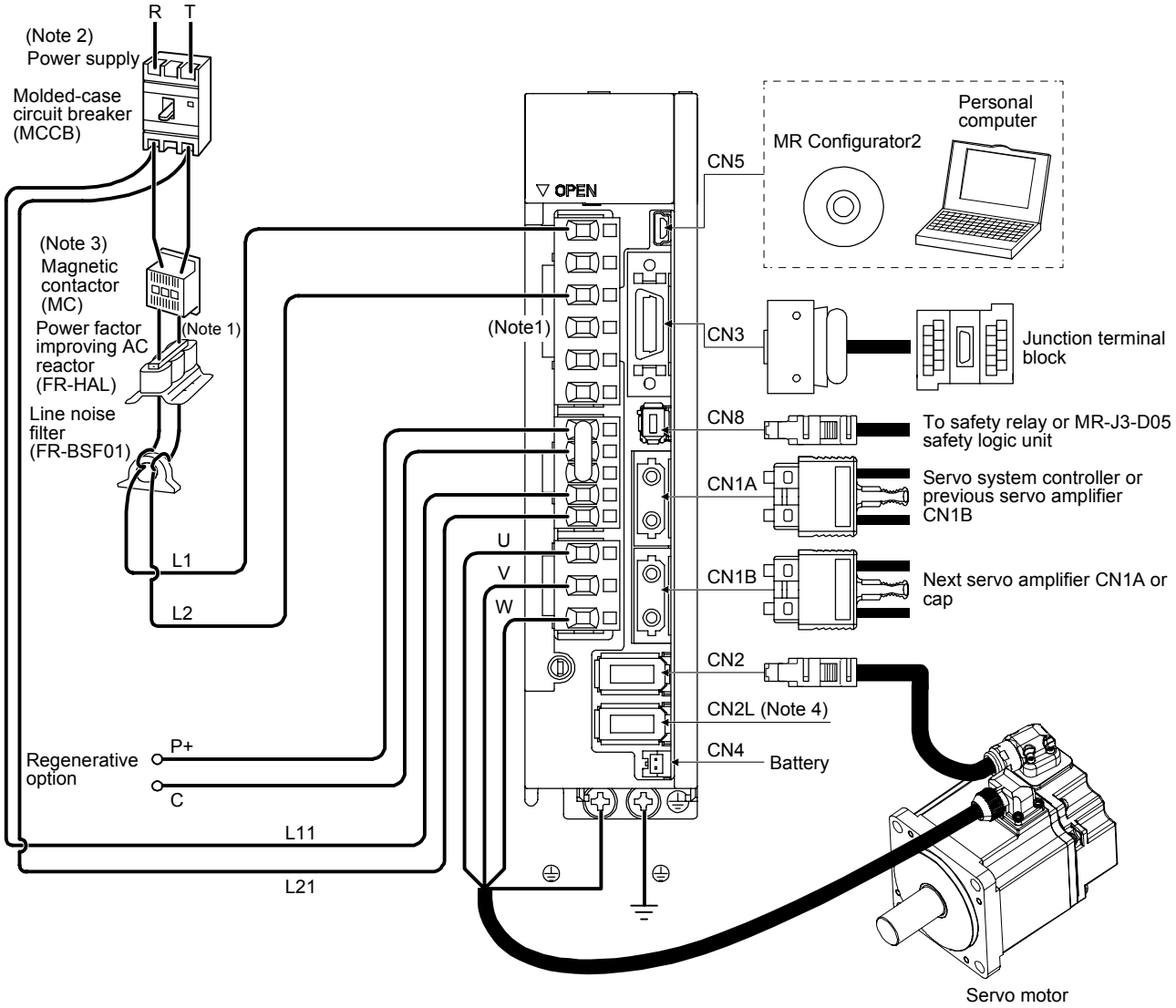

Note 1. The power factor improving DC reactor cannot be used.
2. For power supply specifications, refer to section 1.3.
3. Depending on the main circuit voltage and operation pattern, bus voltage decreases, and that may cause the forced stop deceleration to shift to the dynamic brake deceleration. When dynamic brake deceleration is not required, slow the time to turn off the magnetic contactor.
4. This is for MR-J4-_B1-RJ servo amplifier. MR-J4-_B1 servo amplifier does not have CN2L connector. Refer to Table 1.1 and Linear Encoder Instruction Manual for the compatible external encoders.

MEMO

2. INSTALLATION

⚠WARNING ●To prevent electric shock, ground each equipment securely.

⚠CAUTION

- ●Stacking in excess of the specified number of product packages is not allowed.
- ●Install the equipment on incombustible material. Installing it directly or close to combustibles will lead to a fire.
- ●Install the servo amplifier and the servo motor in a load-bearing place in accordance with the Instruction Manual.
- ●Do not get on or put heavy load on the equipment. Otherwise, it may cause injury.
- ●Use the equipment within the specified environment. For the environment, refer to section 1.3.
- ●Provide an adequate protection to prevent screws and other conductive matter, oil and other combustible matter from entering the servo amplifier.
- ●Do not block the intake and exhaust areas of the servo amplifier. Otherwise, it may cause a malfunction.
- ●Do not drop or strike the servo amplifier. Isolate it from all impact loads.
- ●Do not install or operate the servo amplifier which have been damaged or have any parts missing.
- ●When the equipment has been stored for an extended period of time, contact your local sales office.
- ●When handling the servo amplifier, be careful about the edged parts such as corners of the servo amplifier.
- ●The servo amplifier must be installed in the metal cabinet.
- ●When fumigants that contain halogen materials such as fluorine, chlorine, bromine, and iodine are used for disinfecting and protecting wooden packaging from insects, they cause malfunction when entering our products. Please take necessary precautions to ensure that remaining materials from fumigant do not enter our products, or treat packaging with methods other than fumigation (heat method).Additionally, disinfect and protect wood from insects before packing products.

POINT

●When pulling out CNP1, CNP2, and CNP3 connectors of 100 V class/600 W or lower 200 V class servo amplifier, pull out CN3 and CN8 connectors beforehand.

2.1 Installation direction and clearances

⚠CAUTION	●The equipment must be installed in the specified direction. Otherwise, it may cause a malfunction. ●Leave specified clearances between the servo amplifier and the cabinet walls or other equipment. Otherwise, it may cause a malfunction.

(1) Installation clearances of the servo amplifier

(a) Installation of one servo amplifier

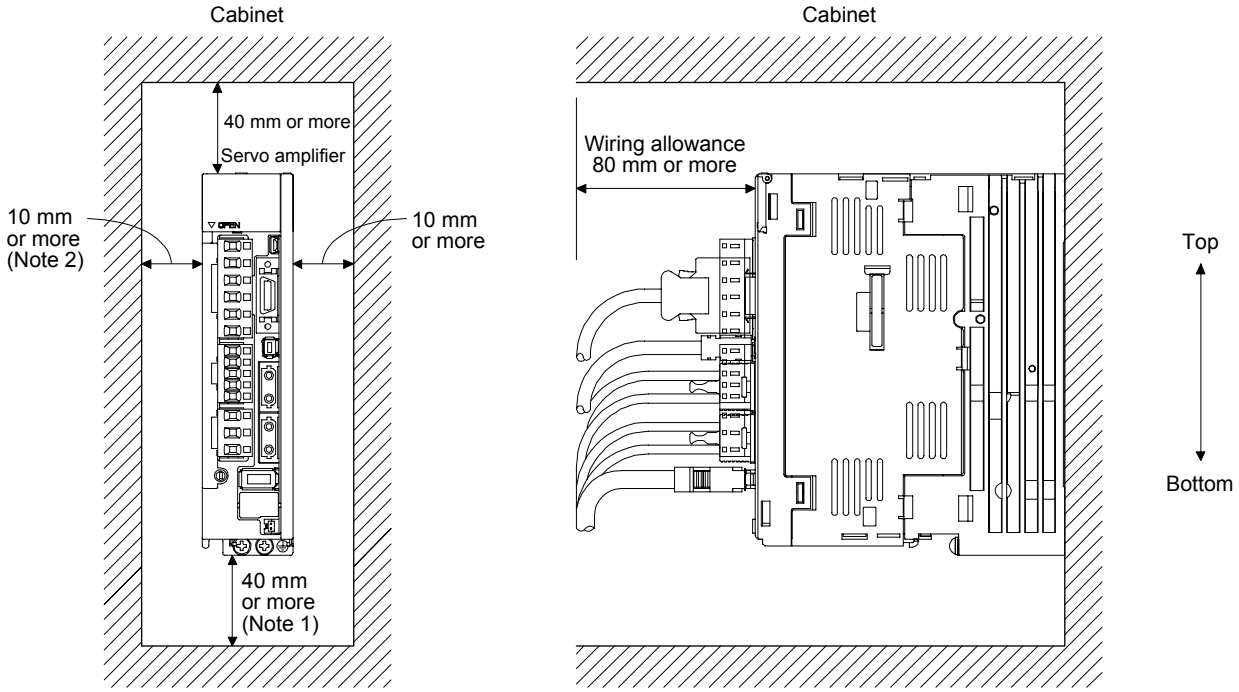

Note 1. For 11 kW to 22 kW servo amplifiers, the clearance between the bottom and ground will be 120 mm or more.
2. For the MR-J4-500B(-RJ), the clearance between the left side and wall will be 25 mm or more.

(b) Installation of two or more servo amplifiers

POINT
●Close mounting is possible depending on the capacity of the servo amplifier. Refer to section 1.3 for availability of close mounting. ●When mounting the servo amplifiers closely, do not install the servo amplifier whose depth is larger than that of the left side servo amplifier since CNP1, CNP2, and CNP3 connectors cannot be disconnected.

Leave a large clearance between the top of the servo amplifier and the cabinet walls, and install a cooling fan to prevent the internal temperature of the cabinet from exceeding the environment. When mounting the servo amplifiers closely, leave a clearance of 1 mm between the adjacent servo amplifiers in consideration of mounting tolerances. In this case, keep the ambient temperature within 0 ˚C to 45 ˚C or use the servo amplifier with 75% or less of the effective load ratio.

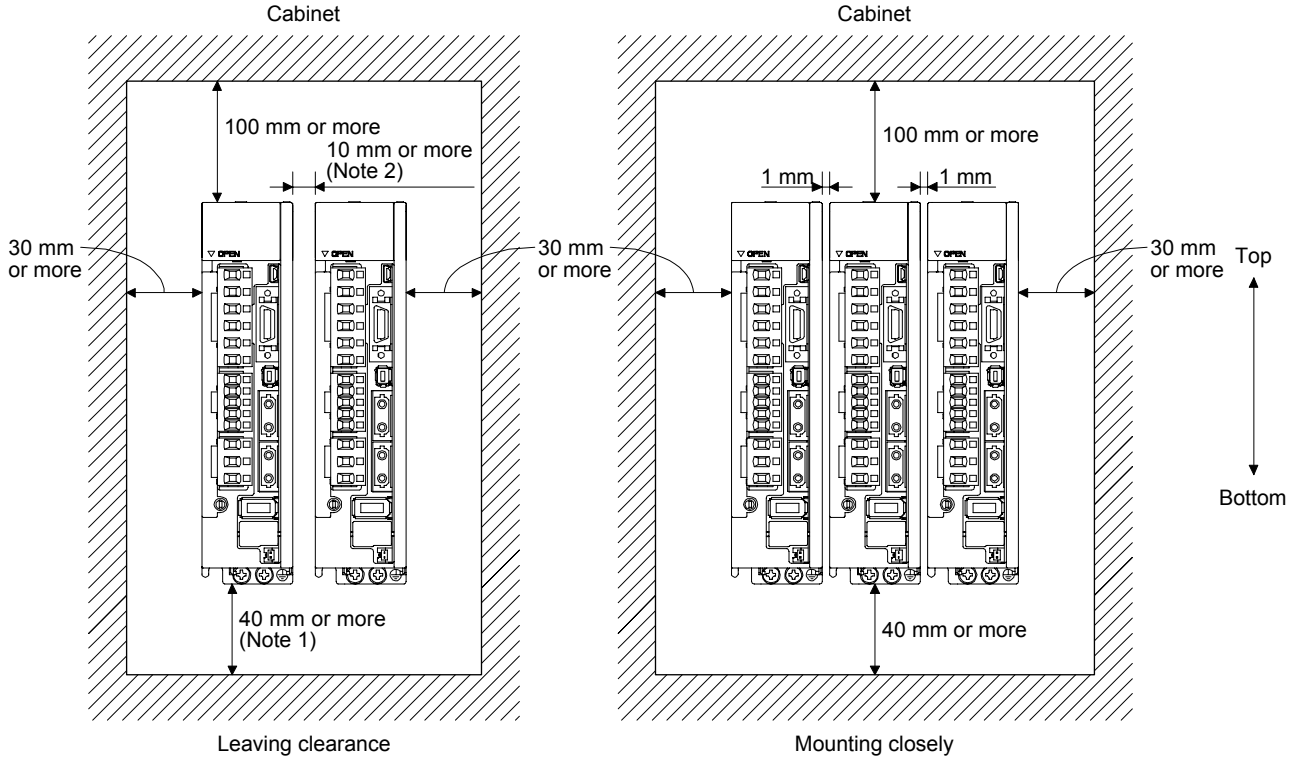

Note 1. For 11 kW to 22 kW servo amplifiers, the clearance between the bottom and ground will be 120 mm or more.
2. When you install the MR-J4-500B(-RJ) on the right side, the clearance between the left side and wall will be 25 mm or more.

(2) Others

When using heat generating equipment such as the regenerative option, install them with full consideration of heat generation so that the servo amplifier is not affected.
Install the servo amplifier on a perpendicular wall in the correct vertical direction.

2.2 Keep out foreign materials

(1) When drilling in the cabinet, prevent drill chips and wire fragments from entering the servo amplifier.

(2) Prevent oil, water, metallic dust, etc. from entering the servo amplifier through openings in the cabinet or a cooling fan installed on the ceiling.

(3) When installing the cabinet in a place where toxic gas, dirt and dust exist, conduct an air purge (force clean air into the cabinet from outside to make the internal pressure higher than the external pressure) to prevent such materials from entering the cabinet.

2.3 Encoder cable stress

(1) The way of clamping the cable must be fully examined so that bending stress and cable's own weight stress are not applied to the cable connection.

(2) For use in any application where the servo motor moves, fix the cables (encoder, power supply, and brake) with having some slack from the connector connection part of the servo motor to avoid putting stress on the connector connection part. Use the optional encoder cable within the bending life range. Use the power supply and brake wiring cables within the bending life of the cables.

(3) Avoid any probability that the cable sheath might be cut by sharp chips, rubbed by a machine corner or stamped by workers or vehicles.

(4) For installation on a machine where the servo motor moves, the bending radius should be made as large as possible. Refer to section 10.4 for the bending life.

2.4 SSCNET III cable laying

SSCNET III cable is made from optical fiber. If optical fiber is added a power such as a major shock, lateral pressure, haul, sudden bending or twist, its inside distorts or breaks, and optical transmission will not be available. Especially, as optical fiber for MR-J3BUS_M/MR-J3BUS_M-A is made of synthetic resin, it melts down if being left near the fire or high temperature. Therefore, do not make it touched the part, which can become hot, such as heat sink or regenerative option of servo amplifier.
Read described item of this section carefully and handle it with caution.

(1) Minimum bend radius
Make sure to lay the cable with greater radius than the minimum bend radius. Do not press the cable to edges of equipment or others. For SSCNET III cable, the appropriate length should be selected with due consideration for the dimensions and arrangement of servo amplifier. When closing the door of cabinet, pay careful attention for avoiding the case that SSCNET III cable is hold down by the door and the cable bend becomes smaller than the minimum bend radius. For the minimum bend radius, refer to section 11.1.3.

(2) Prohibition of vinyl tape use
Migrating plasticizer is used for vinyl tape. Keep the MR-J3BUS_M, and MR-J3BUS_M-A cables away from vinyl tape because the optical characteristic may be affected.

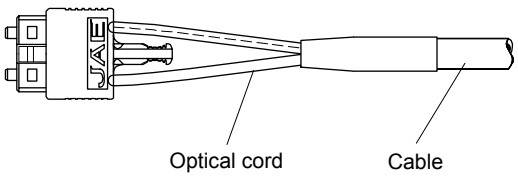

SSCNET III cable	Cord	Cable
MR-J3BUS_M	△	
MR-J3BUS_M-A	△	△
MR-J3BUS_M-B	○	○

△: Phthalate ester plasticizer such as DBP and DOP may affect optical characteristic of cable.
○: Cord and cable are not basically affected by plasticizer.

(3) Precautions for migrating plasticizer added materials

Generally, soft polyvinyl chloride (PVC), polyethylene resin (PE) and fluorine resin contain non-migrating plasticizer and they do not affect the optical characteristic of SSCNET III cable. However, some wire sheaths and cable ties, which contain migrating plasticizer (phthalate ester), may affect MR-J3BUS_M and MR-J3BUS_M-A cables (plastic).

In addition, MR-J3BUS_M-B cable (silica glass) is not affected by plasticizer.

A chemical substance may affect its optical characteristic. Therefore, previously check that the cable is not affected by the environment.

(4) Bundle fixing

Fix the cable at the closest part to the connector with bundle material in order to prevent SSCNET III cable from putting its own weight on CN1A/CN1B connector of servo amplifier. Optical cord should be given loose slack to avoid from becoming smaller than the minimum bend radius, and it should not be twisted.

When bundling the cable, fix and hold it in position by using cushioning such as sponge or rubber which does not contain migratable plasticizers.

If adhesive tape for bundling the cable is used, fire resistant acetate cloth adhesive tape 570F (Teraoka Seisakusho Co., Ltd) is recommended.

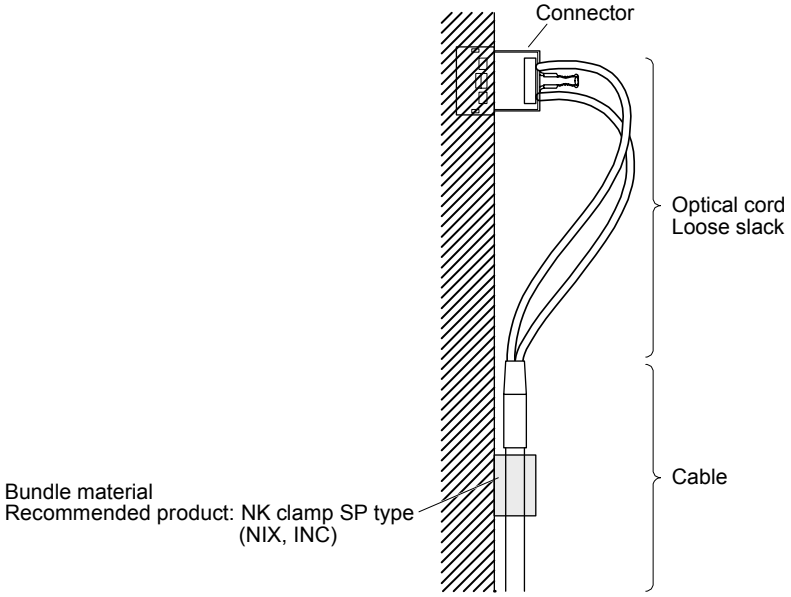

(5) Tension

If tension is added on optical cable, the increase of transmission loss occurs because of external force which concentrates on the fixing part of optical fiber or the connecting part of optical connector. Doing so may cause the breakage of the optical fiber or damage of the optical connector. For cable laying, handle without putting forced tension. For the tension strength, refer to section 11.1.3.

(6) Lateral pressure

If lateral pressure is added on optical cable, the optical cable itself distorts, internal optical fiber gets stressed, and then transmission loss will increase. Doing so may cause the breakage of the optical cable. As the same condition also occurs at cable laying, do not tighten up optical cable with a thing such as nylon band (TY-RAP).

Do not trample it down or tuck it down with the door of cabinet or others.

(7) Twisting
If optical fiber is twisted, it will become the same stress added condition as when local lateral pressure or bend is added. Consequently, transmission loss increases, and the breakage of optical fiber may occur.

(8) Disposal
When incinerating optical cable (cord) used for SSCNET III, hydrogen fluoride gas or hydrogen chloride gas which is corrosive and harmful may be generated. For disposal of optical fiber, request for specialized industrial waste disposal services who has incineration facility for disposing hydrogen fluoride gas or hydrogen chloride gas.

2.5 Inspection items

⚠WARNING	●Before starting maintenance and/or inspection, turn off the power and wait for 15 minutes or more until the charge lamp turns off. Then, confirm that the voltage between P+ and N- is safe with a voltage tester and others. Otherwise, an electric shock may occur. In addition, when confirming whether the charge lamp is off or not, always confirm it from the front of the servo amplifier. ●To avoid an electric shock, only qualified personnel should attempt inspections. For repair and parts replacement, contact your local sales office.

⚠CAUTION	●Do not perform insulation resistance test on the servo amplifier. Otherwise, it may cause a malfunction. ●Do not disassemble and/or repair the equipment on customer side.

It is recommended that the following points periodically be checked.

(1) Check for loose terminal block screws. Retighten any loose screws.

(2) Check the cables and the like for scratches or cracks. Inspect them periodically according to operating conditions especially when the servo motor is movable.

(3) Check that the connector is securely connected to the servo amplifier.

(4) Check that the wires are not coming out from the connector.

(5) Check for dust accumulation on the servo amplifier.

(6) Check for unusual noise generated from the servo amplifier.

2.6 Parts having service lives

Service lives of the following parts are listed below. However, the service lives vary depending on operation and environment. If any fault is found in the parts, they must be replaced immediately regardless of their service lives. For parts replacement, please contact your local sales office.

Part name	Life guideline
Smoothing capacitor	10 years
Relay	Number of power-on, forced stop by EM1 (Forced stop 1), and controller forced stop times: 100,000 times Number of on and off for STO: 1,000,000 times
Cooling fan	10,000 hours to 30,000 hours (2 years to 3 years)
Absolute position battery	Refer to section 12.2.

(1) Smoothing capacitor
The characteristic of smoothing capacitor is deteriorated due to ripple currents, etc. The life of the capacitor greatly depends on ambient temperature and operating conditions. The capacitor will reach the end of its life in 10 years of continuous operation in normal air-conditioned environment (40 ˚C surrounding air temperature or less).

(2) Relays
Contact faults will occur due to contact wear arisen from switching currents. Relays reach the end of their lives when the power has been turned on, forced stop by EM1 (Forced stop 1) has occurred, and controller forced stop has occurred 100,000 times in total, or when the STO has been turned on and off 1,000,000 times while the servo motor is stopped under servo-off state. However, the lives of relays may depend on the power supply capacity.

(3) Servo amplifier cooling fan
The cooling fan bearings reach the end of their life in 10,000 hours to 30,000 hours. Normally, therefore, the cooling fan must be replaced in a few years of continuous operation as a guideline. It must also be changed if unusual noise or vibration is found during inspection.
The life indicates under the yearly average ambient temperature of 40 ˚C, free from corrosive gas, flammable gas, oil mist, dust and dirt.

MEMO

3. SIGNALS AND WIRING

⚠WARNING

- Any person who is involved in wiring should be fully competent to do the work.
- Before wiring, turn off the power and wait for 15 minutes or more until the charge lamp turns off. Then, confirm that the voltage between P+ and N- is safe with a voltage tester and others. Otherwise, an electric shock may occur. In addition, when confirming whether the charge lamp is off or not, always confirm it from the front of the servo amplifier.
- Ground the servo amplifier and servo motor securely.
- Do not attempt to wire the servo amplifier and servo motor until they have been installed. Otherwise, it may cause an electric shock.
- The cables should not be damaged, stressed, loaded, or pinched. Otherwise, it may cause an electric shock.
- To avoid an electric shock, insulate the connections of the power supply terminals.

⚠CAUTION

- Wire the equipment correctly and securely. Otherwise, the servo motor may operate unexpectedly, resulting in injury.
- Connect cables to the correct terminals. Otherwise, a burst, damage, etc. may occur.
- Ensure that polarity (+/-) is correct. Otherwise, a burst, damage, etc. may occur.
- The surge absorbing diode installed to the DC relay for control output should be fitted in the specified direction. Otherwise, the emergency stop and other protective circuits may not operate.

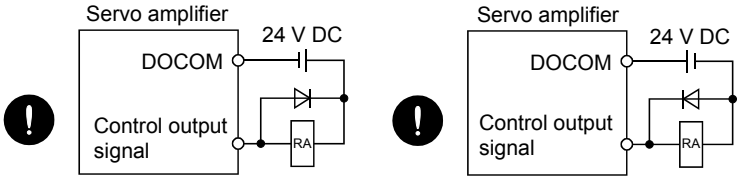

For sink output interface　　For source output interface

- Use a noise filter, etc. to minimize the influence of electromagnetic interference. Electromagnetic interference may be given to the electronic equipment used near the servo amplifier.
- Do not install a power capacitor, surge killer or radio noise filter (optional FR-BIF-(H)) with the power line of the servo motor.
- When using the regenerative resistor, switch power off with the alarm signal. Otherwise, a transistor fault or the like may overheat the regenerative resistor, causing a fire.
- Do not modify the equipment.

⚠CAUTION

●Connect the servo amplifier power output (U, V, and W) to the servo motor power input (U, V, and W) directly. Do not let a magnetic contactor, etc. intervene. Otherwise, it may cause a malfunction.

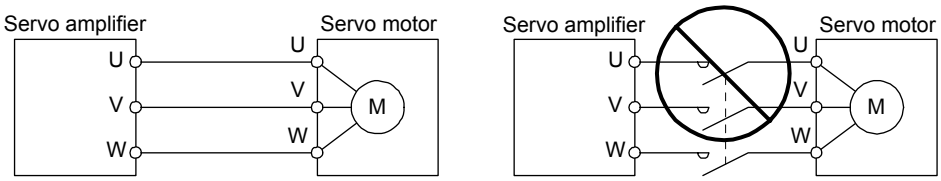

●Connecting a servo motor of the wrong axis to U, V, W, or CN2 of the servo amplifier may cause a malfunction.

POINT

●When you use a linear servo motor, replace the following left words to the right words.

Load to motor inertia ratio	→ Load mass
Torque	→ Thrust
(Servo motor) speed	→ (Linear servo motor) speed

3.1 Input power supply circuit

⚠CAUTION

- Always connect a magnetic contactor between the power supply and the main circuit power supply (L1, L2, and L3) of the servo amplifier, in order to configure a circuit that shuts down the power supply on the side of the servo amplifier's power supply. If a magnetic contactor is not connected, continuous flow of a large current may cause a fire when the servo amplifier malfunctions.
- Use ALM (Malfunction) to switch main circuit power supply off. Not doing so may cause a fire when a regenerative transistor malfunctions or the like may overheat the regenerative resistor.
- Check the servo amplifier model, and then input proper voltage to the servo amplifier power supply. If input voltage exceeds the upper limit, the servo amplifier will break down.
- The servo amplifier has a built-in surge absorber (varistor) to reduce noise and to suppress lightning surge. The varistor can break down due to its aged deterioration. To prevent a fire, use a molded-case circuit breaker or fuse for input power supply.
- Connecting a servo motor of the wrong axis to U, V, W, or CN2 of the servo amplifier may cause a malfunction.

POINT

- Even if alarm has occurred, do not switch off the control circuit power supply. When the control circuit power supply has been switched off, optical module does not operate, and optical transmission of SSCNET III/H communication is interrupted. Therefore, the next axis servo amplifier displays "AA" at the indicator and turns into base circuit shut-off. The servo motor stops with starting dynamic brake.
- EM2 has the same function as EM1 in the torque control mode.
- Connect the 1-phase 200 V AC to 240 V AC power supply to L1 and L3. One of the connecting destinations is different from MR-J3 Series Servo Amplifier's. When using MR-J4 as a replacement for MR-J3, be careful not to connect the power to L2.

Configure the wiring so that the main circuit power supply is shut off and the servo-on command turned off after deceleration to a stop due to an alarm occurring, an enabled servo forced stop, or an enabled controller forced stop. A molded-case circuit breaker (MCCB) must be used with the input cables of the main circuit power supply.

3.1.1 200 V class

(1) For 3-phase 200 V AC to 240 V AC power supply of MR-J4-10B(-RJ) to MR-J4-350B(-RJ)

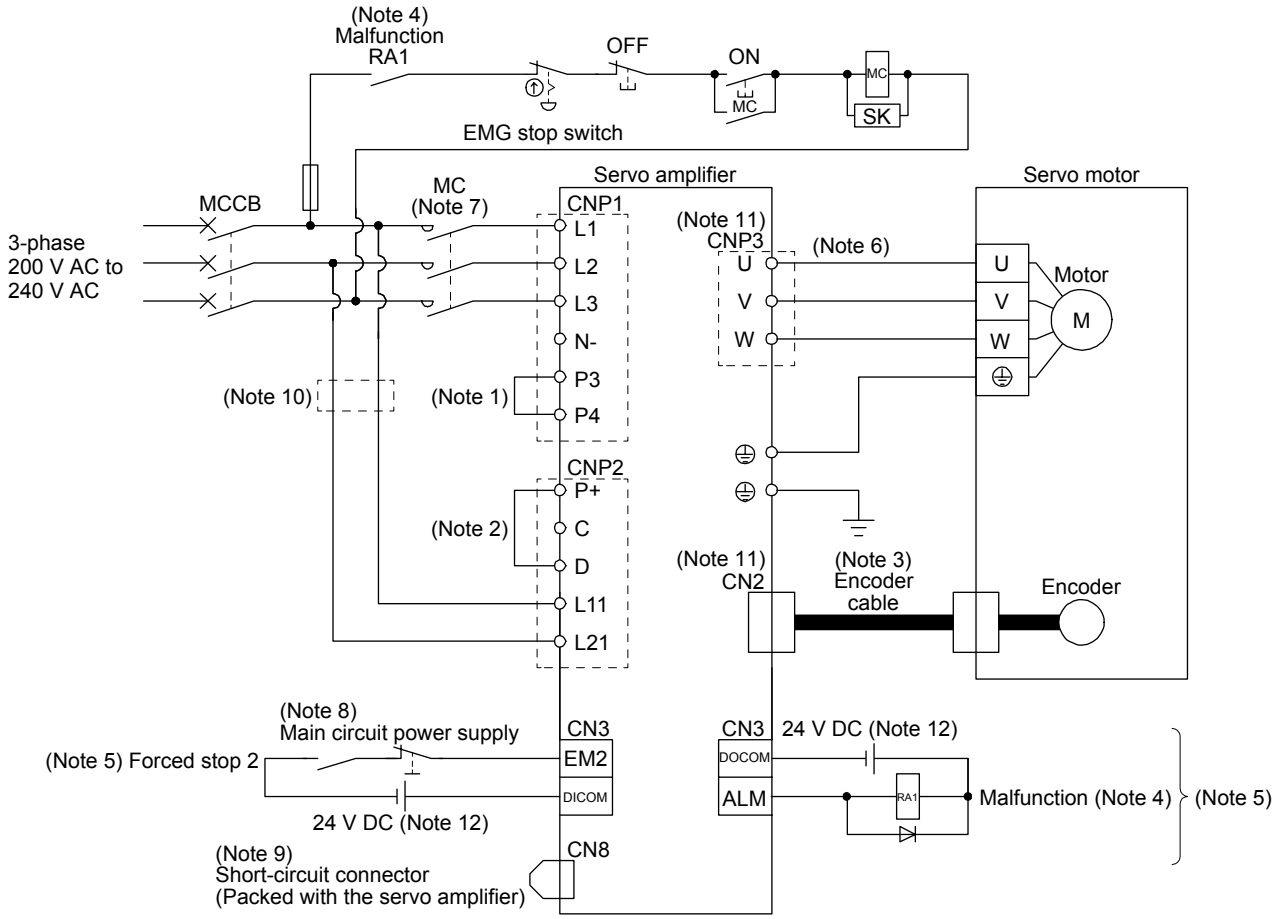

Note 1. Between P3 and P4 is connected by default. When using the power factor improving DC reactor, remove the short bar between P3 and P4. Refer to section 11.11 for details. Additionally, a power factor improving DC reactor and power factor improving AC reactor cannot be used simultaneously.

2. Always connect between P+ and D terminals. (factory-wired) When using the regenerative option, refer to section 11.2.
3. For the encoder cable, use of the option cable is recommended. For selecting cables, refer to "Servo Motor Instruction Manual (Vol. 3)".
4. If disabling ALM (Malfunction) output with the parameter, configure up the power supply circuit which switches off the magnetic contactor after detection of alarm occurrence on the controller side.
5. This diagram is for sink I/O interface. For source I/O interface, refer to section 3.8.3.
6. For connecting servo motor power wires, refer to "Servo Motor Instruction Manual (Vol. 3)".
7. Use a magnetic contactor with an operation delay time (interval between current being applied to the coil until closure of contacts) of 80 ms or less. Depending on the main circuit voltage and operation pattern, bus voltage decreases, and that may cause the forced stop deceleration to shift to the dynamic brake deceleration. When dynamic brake deceleration is not required, slow the time to turn off the magnetic contactor.
8. Configure a circuit to turn off EM2 when the main circuit power is turned off to prevent an unexpected restart of the servo amplifier.
9. When not using the STO function, attach the short-circuit connector came with a servo amplifier.
10. When wires used for L11 and L21 are thinner than wires used for L1, L2, and L3, use a molded-case circuit breaker. (Refer to section 11.10.)
11. Connecting a servo motor of the wrong axis to U, V, W, or CN2 of the servo amplifier may cause a malfunction.
12. The illustration of the 24 V DC power supply is divided between input signal and output signal for convenience. However, they can be configured by one.

(2) For 1-phase 200 V AC to 240 V AC power supply of MR-J4-10B(-RJ) to MR-J4-70B(-RJ)

> **POINT**
>
> ●Connect the 1-phase 200 V AC to 240 V AC power supply to L1 and L3. One of the connecting destinations is different from MR-J3 Series Servo Amplifier's. When using MR-J4 as a replacement for MR-J3, be careful not to connect the power to L2.

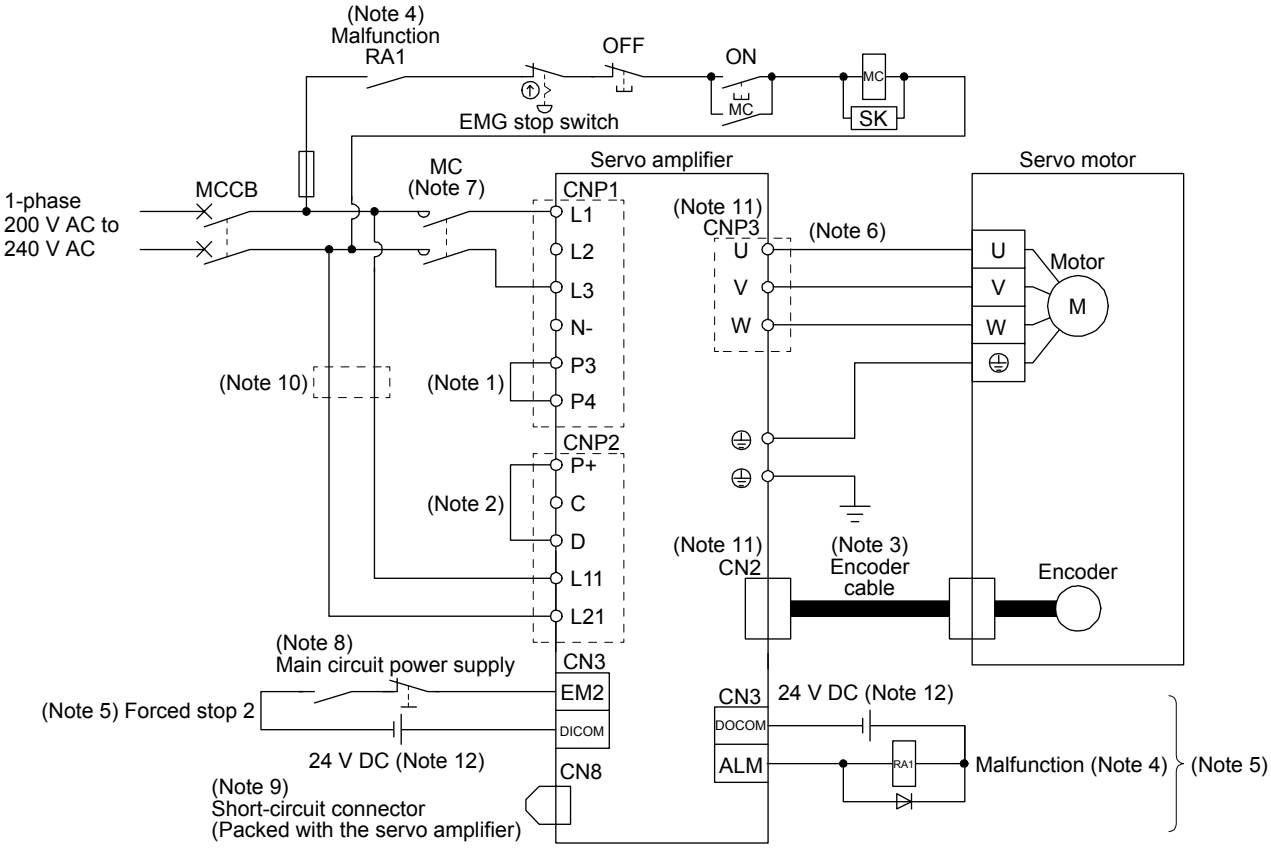

Note 1. Between P3 and P4 is connected by default. When using the power factor improving DC reactor, remove the short bar between P3 and P4. Refer to section 11.11 for details. Additionally, a power factor improving DC reactor and power factor improving AC reactor cannot be used simultaneously.

2. Always connect between P+ and D terminals. (factory-wired) When using the regenerative option, refer to section 11.2.
3. For the encoder cable, use of the option cable is recommended. For selecting cables, refer to "Servo Motor Instruction Manual (Vol. 3)".
4. If disabling ALM (Malfunction) output with the parameter, configure up the power supply circuit which switches off the magnetic contactor after detection of alarm occurrence on the controller side.
5. This diagram is for sink I/O interface. For source I/O interface, refer to section 3.8.3.
6. For connecting servo motor power wires, refer to "Servo Motor Instruction Manual (Vol. 3)".
7. Use a magnetic contactor with an operation delay time (interval between current being applied to the coil until closure of contacts) of 80 ms or less. Depending on the main circuit voltage and operation pattern, bus voltage decreases, and that may cause the forced stop deceleration to shift to the dynamic brake deceleration. When dynamic brake deceleration is not required, slow the time to turn off the magnetic contactor.
8. Configure a circuit to turn off EM2 when the main circuit power is turned off to prevent an unexpected restart of the servo amplifier.
9. When not using the STO function, attach the short-circuit connector came with a servo amplifier.
10. When wires used for L11 and L21 are thinner than wires used for L1, and L3, use a molded-case circuit breaker. (Refer to section 11.10.)
11. Connecting a servo motor of the wrong axis to U, V, W, or CN2 of the servo amplifier may cause a malfunction.
12. The illustration of the 24 V DC power supply is divided between input signal and output signal for convenience. However, they can be configured by one.

(3) MR-J4-500B(-RJ)

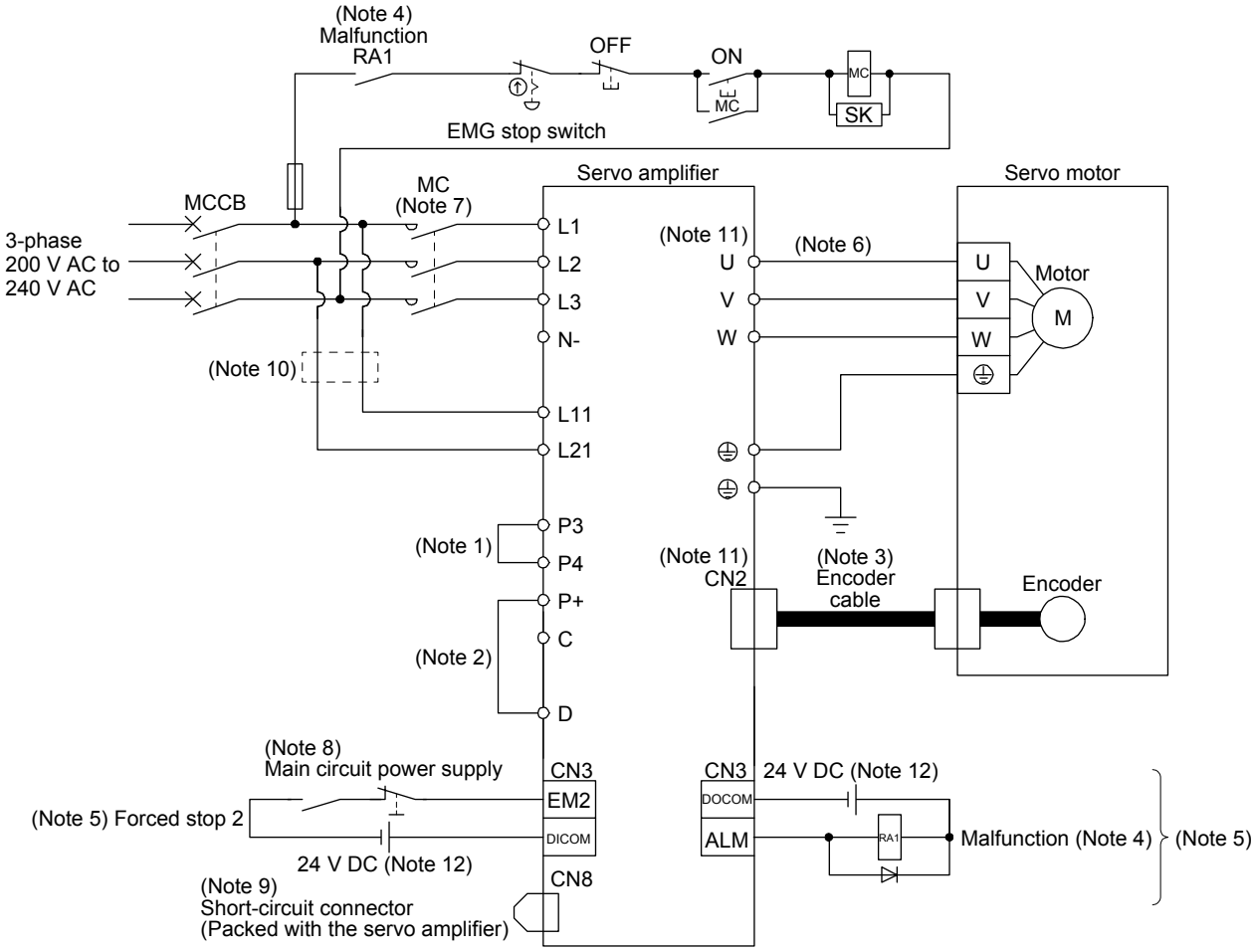

Note 1. Between P3 and P4 is connected by default. When using the power factor improving DC reactor, remove the short bar between P3 and P4. Refer to section 11.11 for details. Additionally, a power factor improving DC reactor and power factor improving AC reactor cannot be used simultaneously.

2. Always connect between P+ and D terminals. (factory-wired) When using the regenerative option, refer to section 11.2.

3. For the encoder cable, use of the option cable is recommended. For selecting cables, refer to "Servo Motor Instruction Manual (Vol. 3)".

4. If disabling ALM (Malfunction) output with the parameter, configure up the power supply circuit which switches off the magnetic contactor after detection of alarm occurrence on the controller side.

5. This diagram is for sink I/O interface. For source I/O interface, refer to section 3.8.3.

6. For connecting servo motor power wires, refer to "Servo Motor Instruction Manual (Vol. 3)".

7. Use a magnetic contactor with an operation delay time (interval between current being applied to the coil until closure of contacts) of 80 ms or less. Depending on the main circuit voltage and operation pattern, bus voltage decreases, and that may cause the forced stop deceleration to shift to the dynamic brake deceleration. When dynamic brake deceleration is not required, slow the time to turn off the magnetic contactor.

8. Configure a circuit to turn off EM2 when the main circuit power is turned off to prevent an unexpected restart of the servo amplifier.

9. When not using the STO function, attach the short-circuit connector came with a servo amplifier.

10. When wires used for L11 and L21 are thinner than wires used for L1, L2, and L3, use a molded-case circuit breaker. (Refer to section 11.10.)

11. Connecting a servo motor of the wrong axis to U, V, W, or CN2 of the servo amplifier may cause a malfunction.

12. The illustration of the 24 V DC power supply is divided between input signal and output signal for convenience. However, they can be configured by one.

(4) MR-J4-700B(-RJ)

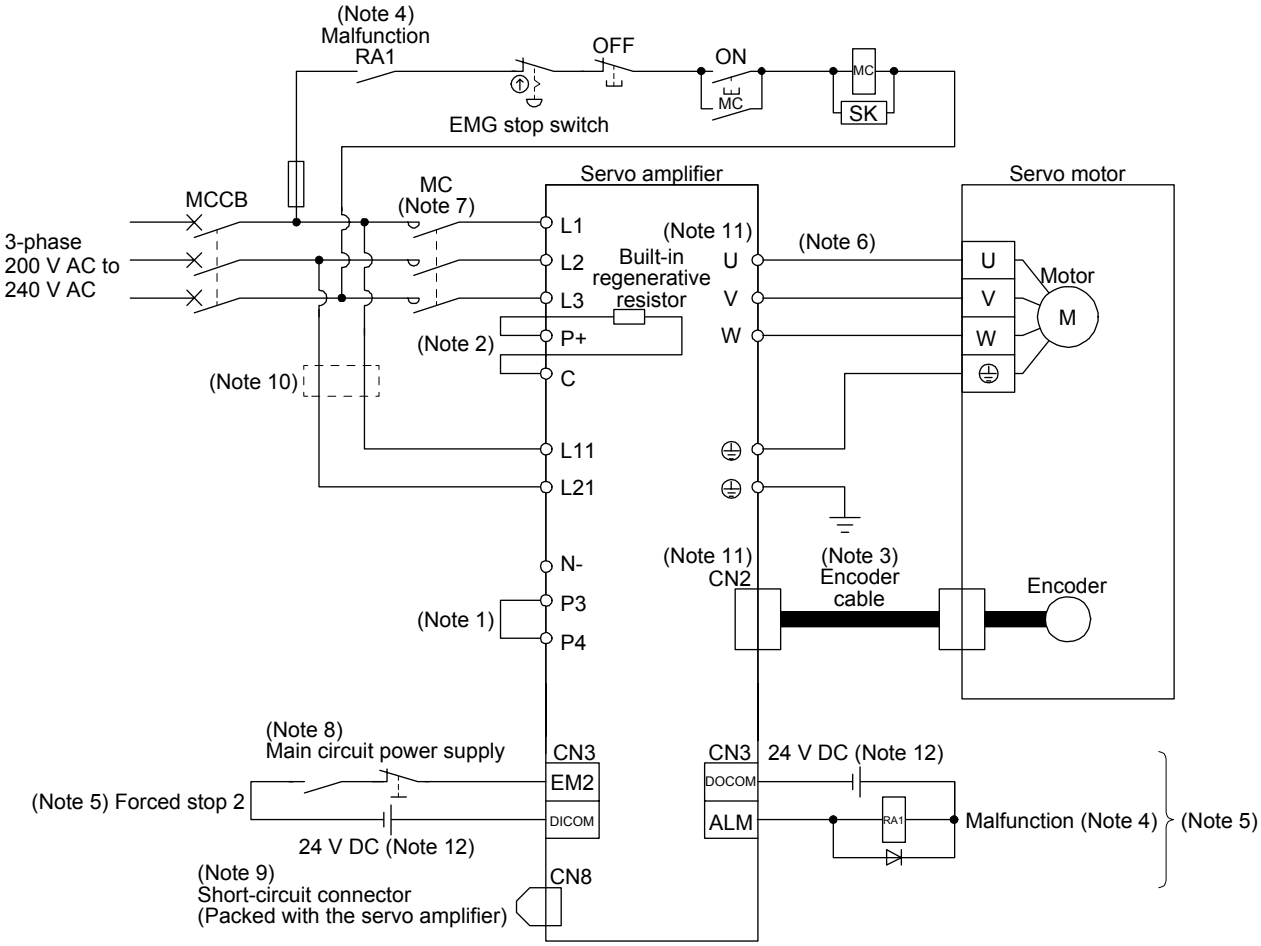

Note 1. Between P3 and P4 is connected by default. When using the power factor improving DC reactor, remove the short bar between P3 and P4. Refer to section 11.11 for details. Additionally, a power factor improving DC reactor and power factor improving AC reactor cannot be used simultaneously.

2. When using the regenerative option, refer to section 11.2.

3. For the encoder cable, use of the option cable is recommended. For selecting cables, refer to "Servo Motor Instruction Manual (Vol. 3)".

4. If disabling ALM (Malfunction) output with the parameter, configure up the power supply circuit which switches off the magnetic contactor after detection of alarm occurrence on the controller side.

5. This diagram is for sink I/O interface. For source I/O interface, refer to section 3.8.3.

6. For connecting servo motor power wires, refer to "Servo Motor Instruction Manual (Vol. 3)".

7. Use a magnetic contactor with an operation delay time (interval between current being applied to the coil until closure of contacts) of 80 ms or less. Depending on the main circuit voltage and operation pattern, bus voltage decreases, and that may cause the forced stop deceleration to shift to the dynamic brake deceleration. When dynamic brake deceleration is not required, slow the time to turn off the magnetic contactor.

8. Configure a circuit to turn off EM2 when the main circuit power is turned off to prevent an unexpected restart of the servo amplifier.

9. When not using the STO function, attach the short-circuit connector came with a servo amplifier.

10. When wires used for L11 and L21 are thinner than wires used for L1, L2, and L3, use a molded-case circuit breaker. (Refer to section 11.10.)

11. Connecting a servo motor of the wrong axis to U, V, W, or CN2 of the servo amplifier may cause a malfunction.

12. The illustration of the 24 V DC power supply is divided between input signal and output signal for convenience. However, they can be configured by one.

(5) MR-J4-11KB(-RJ)/MR-J4-15KB(-RJ)/MR-J4-22KB(-RJ)

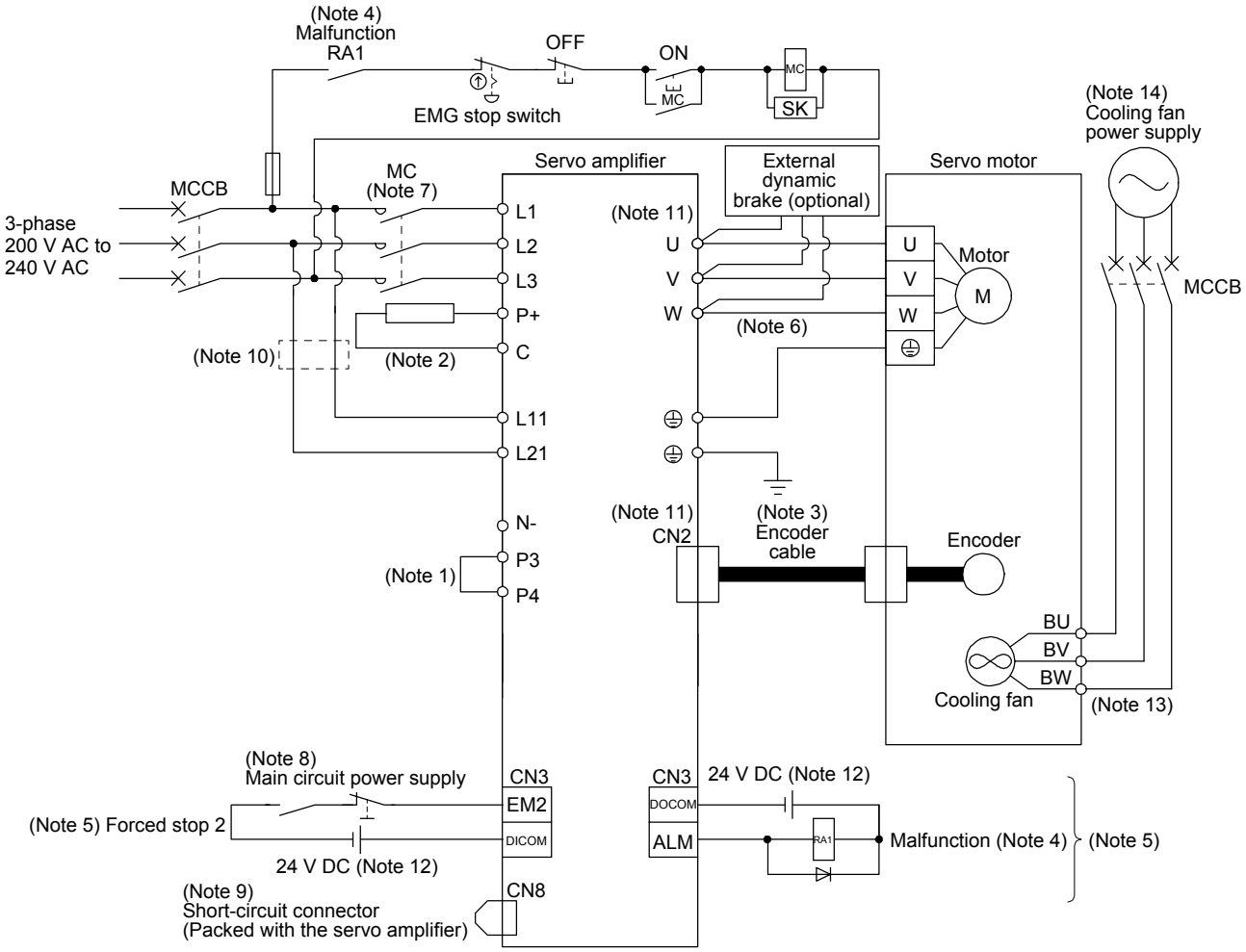

Note 1. Between P3 and P4 is connected by default. When using the power factor improving DC reactor, remove the short bar between P3 and P4. Refer to section 11.11 for details. Additionally, a power factor improving DC reactor and power factor improving AC reactor cannot be used simultaneously.

2. When using the regenerative option, refer to section 11.2.

3. For the encoder cable, use of the option cable is recommended. For selecting cables, refer to "Servo Motor Instruction Manual (Vol. 3)".

4. If disabling ALM (Malfunction) output with the parameter, configure up the power supply circuit which switches off the magnetic contactor after detection of alarm occurrence on the controller side.

5. This diagram is for sink I/O interface. For source I/O interface, refer to section 3.8.3.

6. For connecting servo motor power wires, refer to "Servo Motor Instruction Manual (Vol. 3)".

7. Use a magnetic contactor with an operation delay time (interval between current being applied to the coil until closure of contacts) of 80 ms or less. Depending on the main circuit voltage and operation pattern, bus voltage decreases, and that may cause the forced stop deceleration to shift to the dynamic brake deceleration. When dynamic brake deceleration is not required, slow the time to turn off the magnetic contactor.

8. Configure a circuit to turn off EM2 when the main circuit power is turned off to prevent an unexpected restart of the servo amplifier.

9. When not using the STO function, attach the short-circuit connector came with a servo amplifier.

10. When wires used for L11 and L21 are thinner than wires used for L1, L2, and L3, use a molded-case circuit breaker. (Refer to section 11.10.)

11. Connecting a servo motor of the wrong axis to U, V, W, or CN2 of the servo amplifier may cause a malfunction.

12. The illustration of the 24 V DC power supply is divided between input signal and output signal for convenience. However, they can be configured by one.

13. For the servo motor with a cooling fan.

14. For the cooling fan power supply, refer to "Servo Motor Instruction Manual (Vol. 3)".

3.1.2 400 V class

(1) MR-J4-60B4(-RJ) to MR-J4-350B4(-RJ)

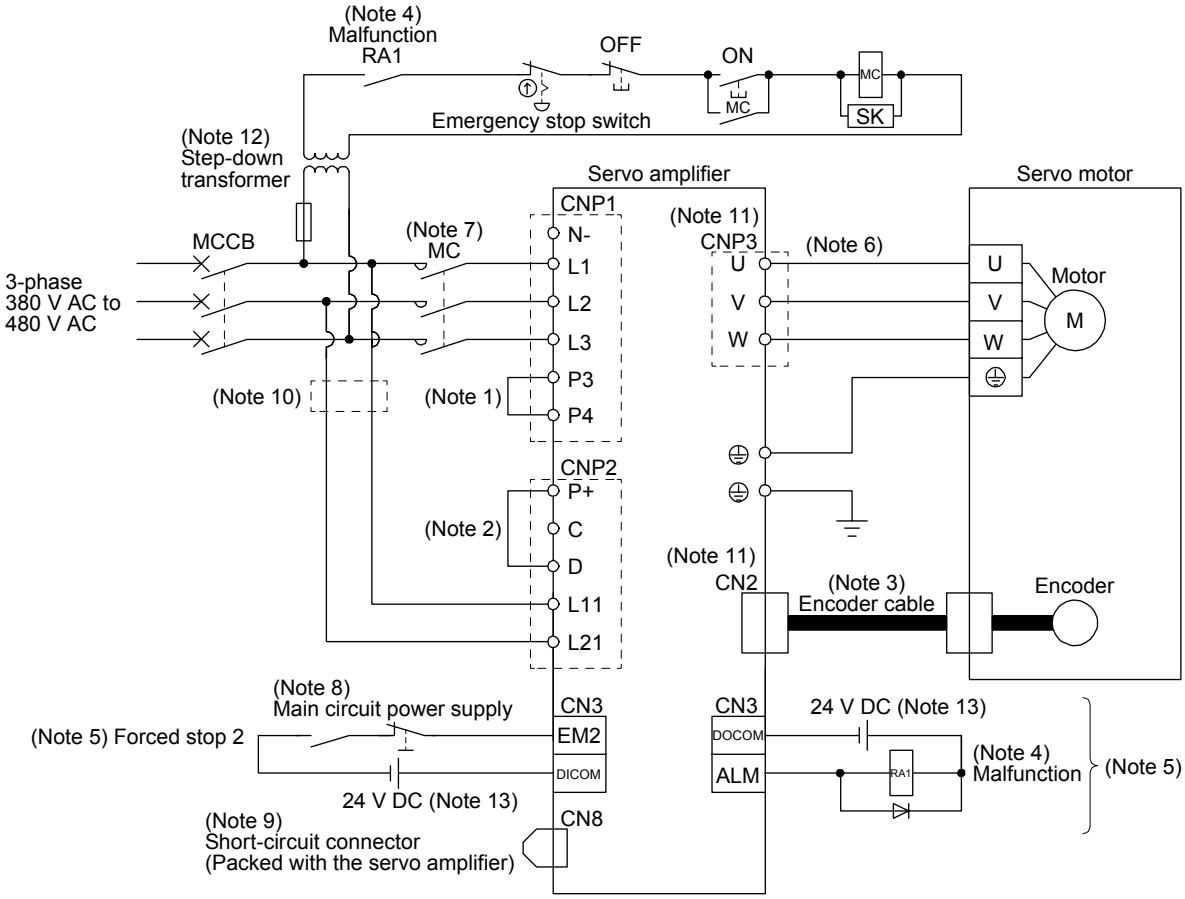

Note 1. Between P3 and P4 is connected by default. When using the power factor improving DC reactor, remove the short bar between P3 and P4. Refer to section 11.11 for details. Additionally, a power factor improving DC reactor and power factor improving AC reactor cannot be used simultaneously.

2. Always connect between P+ and D terminals. (factory-wired) When using the regenerative option, refer to section 11.2.
3. For the encoder cable, use of the option cable is recommended. For selecting cables, refer to "Servo Motor Instruction Manual (Vol. 3)".
4. If disabling ALM (Malfunction) output with the parameter, configure up the power supply circuit which switches off the magnetic contactor after detection of alarm occurrence on the controller side.
5. This diagram is for sink I/O interface. For source I/O interface, refer to section 3.8.3.
6. For connecting servo motor power wires, refer to "Servo Motor Instruction Manual (Vol. 3)".
7. Use a magnetic contactor with an operation delay time (interval between current being applied to the coil until closure of contacts) of 80 ms or less. Depending on the main circuit voltage and operation pattern, bus voltage decreases, and that may cause the forced stop deceleration to shift to the dynamic brake deceleration. When dynamic brake deceleration is not required, slow the time to turn off the magnetic contactor.
8. Configure a circuit to turn off EM2 when the main circuit power is turned off to prevent an unexpected restart of the servo amplifier.
9. When not using the STO function, attach the short-circuit connector came with a servo amplifier.
10. When wires used for L11 and L21 are thinner than wires used for L1, L2, and L3, use a molded-case circuit breaker. (Refer to section 11.10.)
11. Connecting a servo motor for different axis to U, V, W, or CN2 of the servo amplifier may cause a malfunction.
12. Stepdown transformer is required when the coil voltage of the magnetic contactor is 200 V class.
13. The illustration of the 24 V DC power supply is divided between input signal and output signal for convenience. However, they can be configured by one.

(2) MR-J4-500B4(-RJ)/MR-J4-700B4(-RJ)

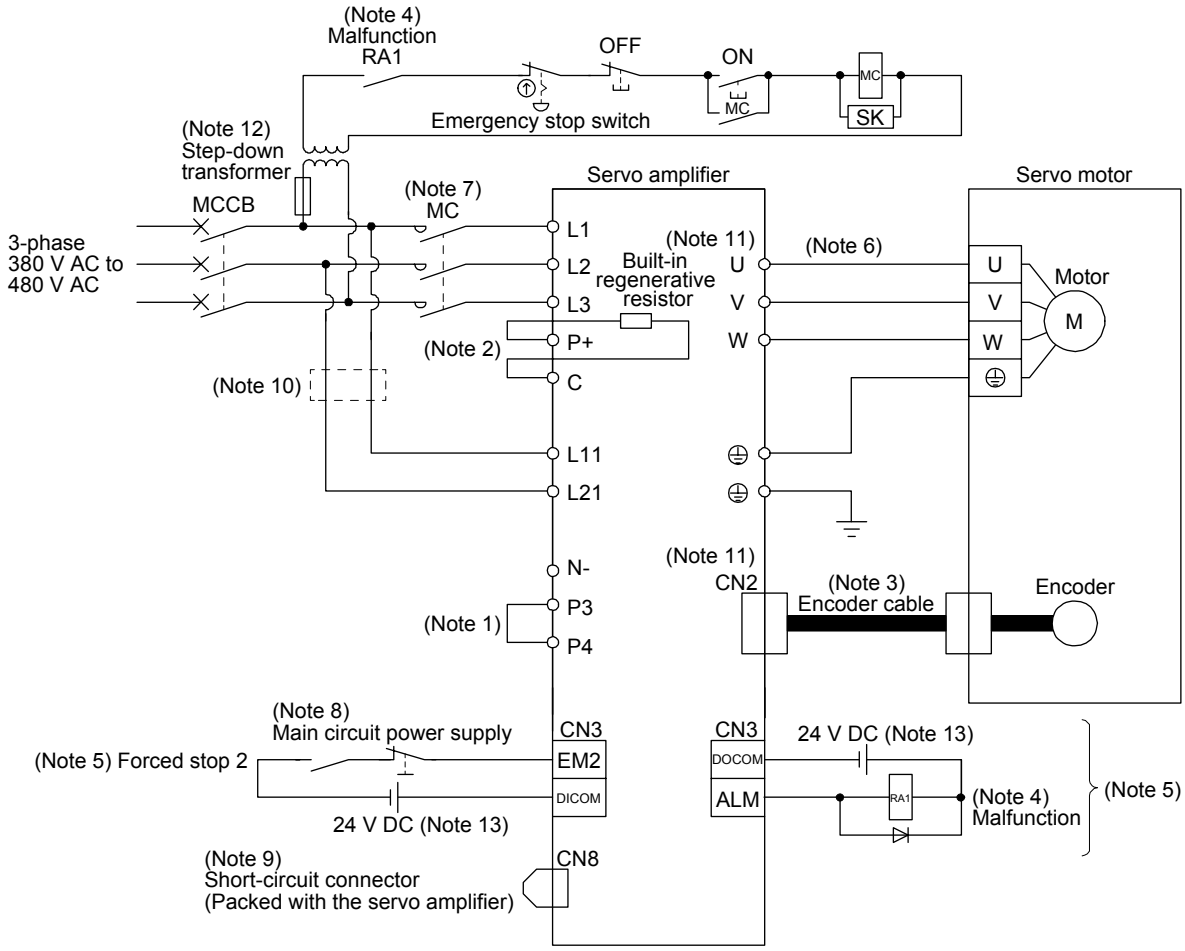

Note 1. Between P3 and P4 is connected by default. When using the power factor improving DC reactor, remove the short bar between P3 and P4. Refer to section 11.11 for details. Additionally, a power factor improving DC reactor and power factor improving AC reactor cannot be used simultaneously.

2. When using the regenerative option, refer to section 11.2.

3. For the encoder cable, use of the option cable is recommended. For selecting cables, refer to "Servo Motor Instruction Manual (Vol. 3)".

4. If disabling ALM (Malfunction) output with the parameter, configure up the power supply circuit which switches off the magnetic contactor after detection of alarm occurrence on the controller side.

5. This diagram is for sink I/O interface. For source I/O interface, refer to section 3.8.3.

6. For connecting servo motor power wires, refer to "Servo Motor Instruction Manual (Vol. 3)".

7. Use a magnetic contactor with an operation delay time (interval between current being applied to the coil until closure of contacts) of 80 ms or less. Depending on the main circuit voltage and operation pattern, bus voltage decreases, and that may cause the forced stop deceleration to shift to the dynamic brake deceleration. When dynamic brake deceleration is not required, slow the time to turn off the magnetic contactor.

8. Configure a circuit to turn off EM2 when the main circuit power is turned off to prevent an unexpected restart of the servo amplifier.

9. When not using the STO function, attach the short-circuit connector came with a servo amplifier.

10. When wires used for L11 and L21 are thinner than wires used for L1, L2, and L3, use a molded-case circuit breaker. (Refer to section 11.10.)

11. Connecting a servo motor for different axis to U, V, W, or CN2 of the servo amplifier may cause a malfunction.

12. Stepdown transformer is required when the coil voltage of the magnetic contactor is 200 V class.

13. The illustration of the 24 V DC power supply is divided between input signal and output signal for convenience. However, they can be configured by one.

(3) MR-J4-11KB4(-RJ) to MR-J4-22KB4(-RJ)

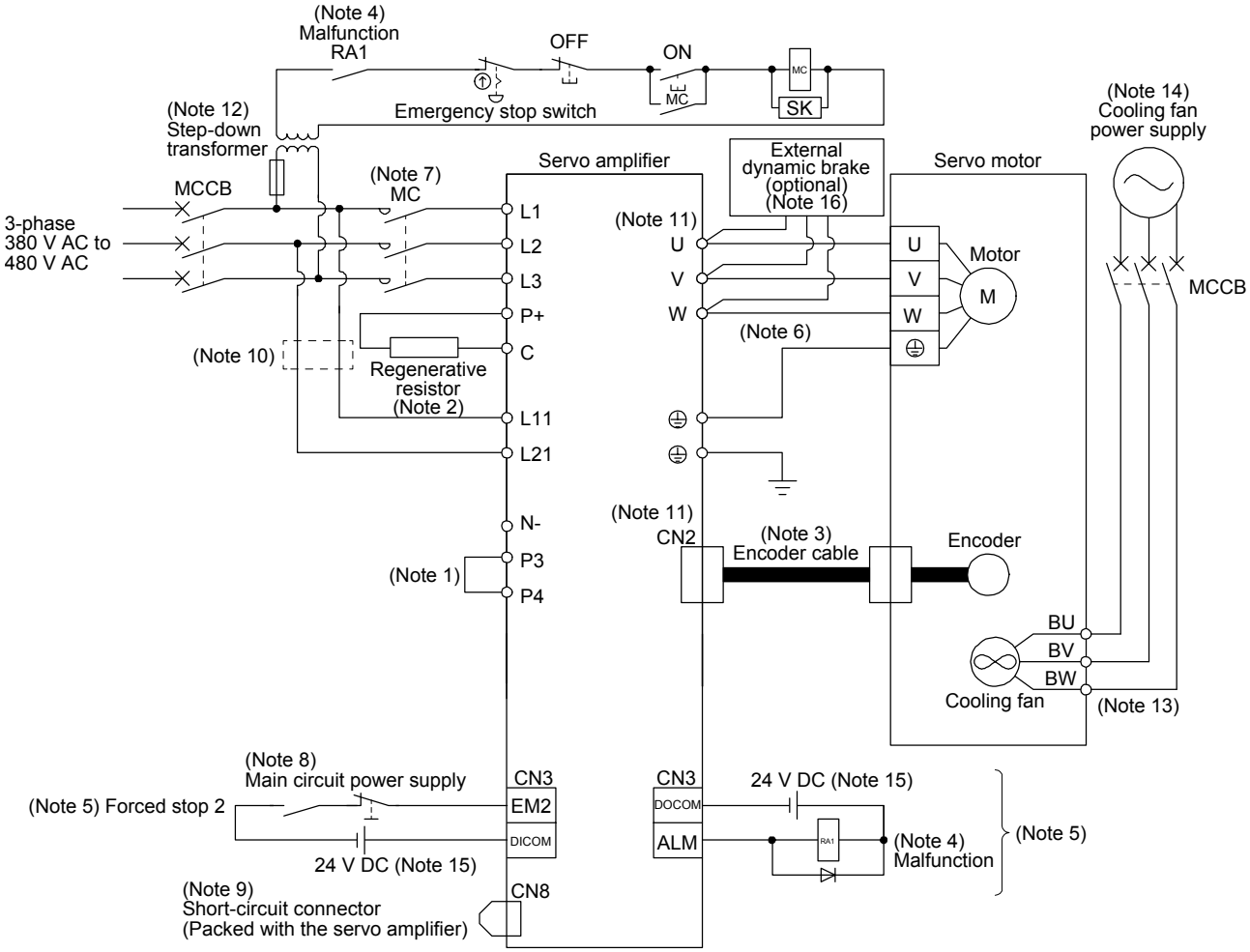

Note 1. Between P3 and P4 is connected by default. When using the power factor improving DC reactor, remove the short bar between P3 and P4. Refer to section 11.11 for details. Additionally, a power factor improving DC reactor and power factor improving AC reactor cannot be used simultaneously.
2. When using the regenerative resistor, refer to section 11.2.
3. For the encoder cable, use of the option cable is recommended. For selecting cables, refer to "Servo Motor Instruction Manual (Vol. 3)".
4. If disabling ALM (Malfunction) output with the parameter, configure up the power supply circuit which switches off the magnetic contactor after detection of alarm occurrence on the controller side.
5. This diagram is for sink I/O interface. For source I/O interface, refer to section 3.8.3 in MR-J4-_B(-RJ) Servo Amplifier Instruction Manual.
6. For connecting servo motor power wires, refer to "Servo Motor Instruction Manual (Vol. 3)".
7. Use a magnetic contactor with an operation delay time (interval between current being applied to the coil until closure of contacts) of 80 ms or less. Depending on the main circuit voltage and operation pattern, bus voltage decreases, and that may cause the forced stop deceleration to shift to the dynamic brake deceleration. When dynamic brake deceleration is not required, slow the time to turn off the magnetic contactor.
8. Configure a circuit to turn off EM2 when the main circuit power is turned off to prevent an unexpected restart of the servo amplifier.
9. When not using the STO function, attach the short-circuit connector came with a servo amplifier.
10. When wires used for L11 and L21 are thinner than wires used for L1, L2, and L3, use a molded-case circuit breaker. (Refer to section 11.10.)
11. Connecting a servo motor for different axis to U, V, W, or CN2 of the servo amplifier may cause a malfunction.
12. Stepdown transformer is required for coil voltage of magnetic contactor more than 200 V class servo amplifiers.
13. For the servo motor with a cooling fan.
14. For the cooling fan power supply, refer to "Servo Motor Instruction Manual (Vol. 3)".
15. The illustration of the 24 V DC power supply is divided between input signal and output signal for convenience. However, they can be configured by one.
16. Use an external dynamic brake for this servo amplifier. Failure to do so will cause an accident because the servo motor does not stop immediately but coasts at an alarm occurrence for which the servo motor does not decelerate to stop. Ensure the safety in the entire equipment. For alarms for which the servo motor does not decelerate to stop, refer to chapter 8.

3.1.3 100 V class

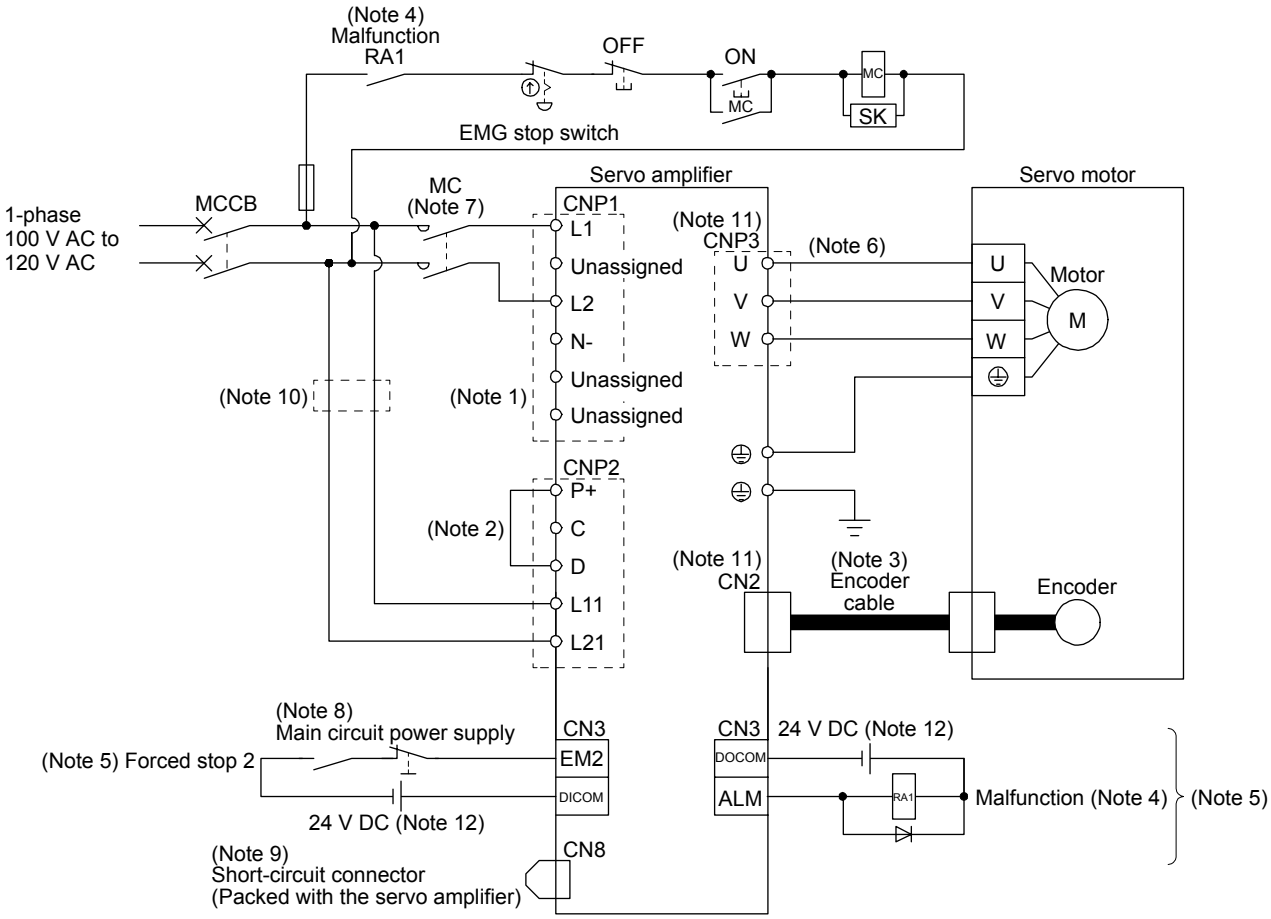

Note 1. The power factor improving DC reactor cannot be used.
2. Always connect between P+ and D terminals. (factory-wired) When using the regenerative option, refer to section 11.2.
3. For the encoder cable, use of the option cable is recommended. For selecting cables, refer to "Servo Motor Instruction Manual (Vol. 3)".
4. If disabling ALM (Malfunction) output with the parameter, configure up the power supply circuit which switches off the magnetic contactor after detection of alarm occurrence on the controller side.
5. This diagram is for sink I/O interface. For source I/O interface, refer to section 3.8.3.
6. For connecting servo motor power wires, refer to "Servo Motor Instruction Manual (Vol. 3)".
7. Use a magnetic contactor with an operation delay time (interval between current being applied to the coil until closure of contacts) of 80 ms or less. Depending on the main circuit voltage and operation pattern, bus voltage decreases, and that may cause the forced stop deceleration to shift to the dynamic brake deceleration. When dynamic brake deceleration is not required, slow the time to turn off the magnetic contactor.
8. Configure a circuit to turn off EM2 when the main circuit power is turned off to prevent an unexpected restart of the servo amplifier.
9. When not using the STO function, attach the short-circuit connector came with a servo amplifier.
10. When wires used for L11 and L21 are thinner than wires used for L1 and L2, use a molded-case circuit breaker. (Refer to section 11.10.)
11. Connecting a servo motor of the wrong axis to U, V, W, or CN2 of the servo amplifier may cause a malfunction.
12. The illustration of the 24 V DC power supply is divided between input signal and output signal for convenience. However, they can be configured by one.

3.2 I/O signal connection example

POINT
●EM2 has the same function as EM1 in the torque control mode.

3.2.1 For sink I/O interface

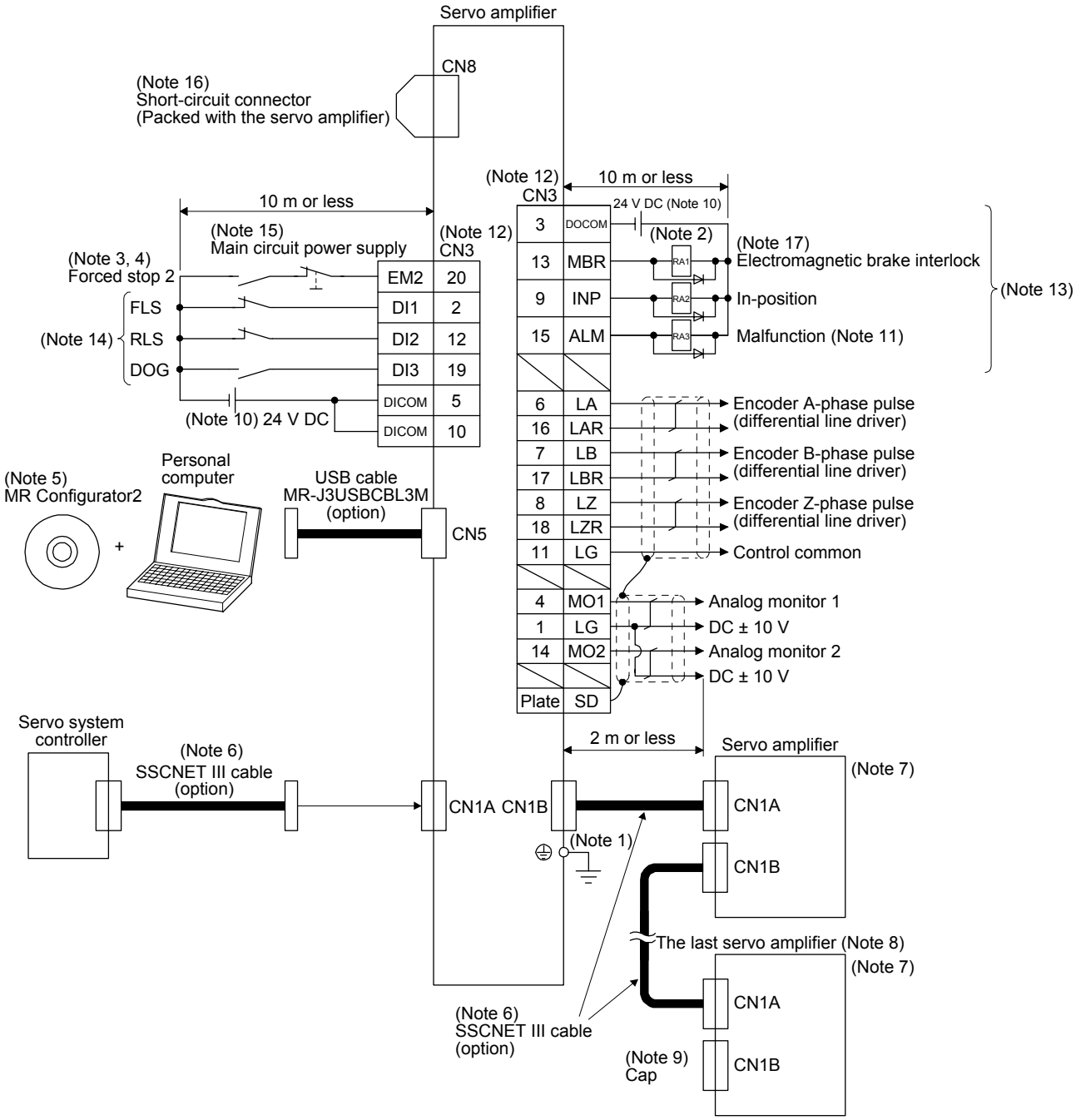

Note 1. To prevent an electric shock, always connect the protective earth (PE) terminal (marked ⏚) of the servo amplifier to the protective earth (PE) of the cabinet.
2. Connect the diode in the correct direction. If it is connected reversely, the servo amplifier will malfunction and will not output signals, disabling EM2 (Forced stop 2) and other protective circuits.
3. If the controller does not have forced stop function, always install the forced stop 2 switch (normally closed contact).
4. When starting operation, always turn on EM2 (Forced stop 2). (Normally closed contact)
5. Use SW1DNC-MRC2-J. (Refer to section 11.7.)
6. Use SSCNET III cables listed in the following table.

Cable	Cable model	Cable length
Standard cord inside cabinet	MR-J3BUS_M	0.15 m to 3 m
Standard cable outside cabinet	MR-J3BUS_M-A	5 m to 20 m
Long-distance cable	MR-J3BUS_M-B	30 m to 50 m

7. The wiring after the second servo amplifier is omitted.
8. Up to 64 axes of servo amplifiers can be connected. The number of connectable axes depends on the controller you use. Refer to section 4.3.1 for setting of axis selection.
9. Make sure to cap the unused CN1B connector.
10. Supply 24 V DC ± 10% for interfaces from outside. Set the total current capacity to 300 mA. 300 mA is the value applicable when all I/O signals are used. The current capacity can be decreased by reducing the number of I/O points. Refer to section 3.8.2 (1) that gives the current value necessary for the interface. The illustration of the 24 V DC power supply is divided between input signal and output signal for convenience. However, they can be configured by one.
11. ALM (Malfunction) turns on in normal alarm-free condition. (Normally closed contact)
12. The pins with the same signal name are connected in the servo amplifier.
13. You can change devices of these pins with [Pr. PD07], [Pr. PD08], and [Pr. PD09].
14. Devices can be assigned for these signals with controller setting. For devices that can be assigned, refer to the controller instruction manual. The following devices can be assigned for Q172DSCPU, Q173DSCPU, and QD77MS_.
    FLS: Upper stroke limit
    RLS: Lower stroke limit
    DOG: Proximity dog
15. Configure a circuit to turn off EM2 when the main circuit power is turned off to prevent an unexpected restart of the servo amplifier.
16. When not using the STO function, attach the short-circuit connector came with a servo amplifier.
17. When you use a linear servo motor or direct drive motor, use MBR (Electromagnetic brake interlock) for an external brake mechanism.

3.2.2 For source I/O interface

POINT
●For notes, refer to section 3.2.1.

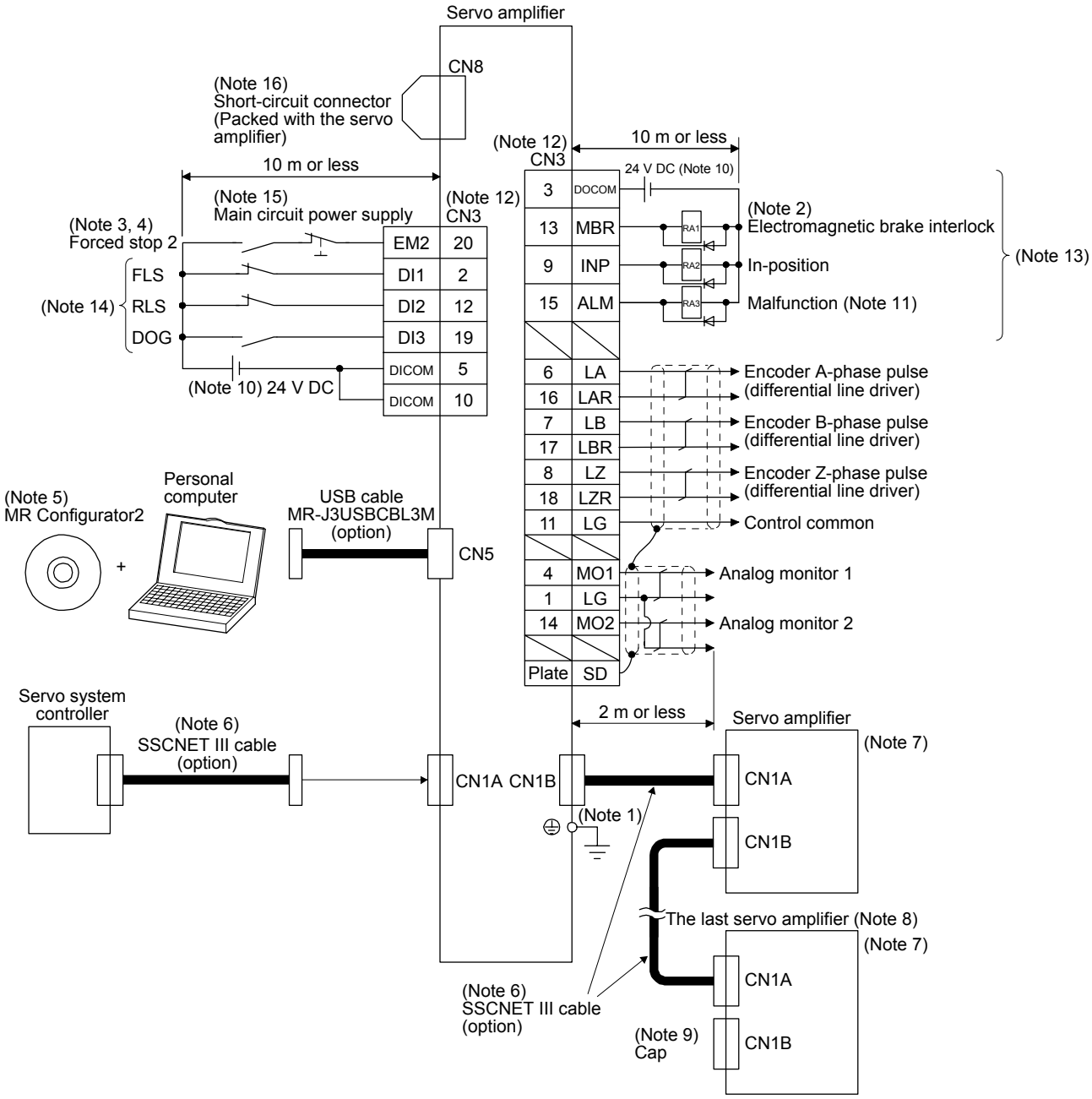

3.3 Explanation of power supply system

3.3.1 Signal explanations

POINT

●For the layout of connector and terminal block, refer to chapter 9 DIMENSIONS.

<table>
<tr><th>Symbol</th><th>Connection target (application)</th><th>Description</th></tr>
<tr><td>L1/L2/L3</td><td>Main circuit power supply</td><td>Supply the following power to L1, L2, and L3. For 1-phase 200 V AC to 240 V AC, connect the power supply to L1 and L3. Leave L2 open.
<table>
<tr><th>Servo amplifier / Power</th><th>MR-J4-10B (-RJ) to MR-J4-70B (-RJ)</th><th>MR-J4-100B (-RJ) to MR-J4-22KB (-RJ)</th><th>MR-J4-60B4 (-RJ) to MR-J4-22KB4 (-RJ)</th><th>MR-J4-10B1 to MR-J4-40B1</th></tr>
<tr><td>3-phase 200 V AC to 240 V AC, 50 Hz/60 Hz</td><td colspan="2">L1/L2/L3</td><td></td><td></td></tr>
<tr><td>1-phase 200 V AC to 240 V AC, 50 Hz/60 Hz</td><td>L1/L3</td><td></td><td></td><td></td></tr>
<tr><td>3-phase 380 V AC to 480 V AC, 50 Hz/60 Hz</td><td></td><td></td><td>L1/L2/L3</td><td></td></tr>
<tr><td>1-phase 100 V AC to 120 V AC, 50 Hz/60 Hz</td><td></td><td></td><td></td><td>L1/L2</td></tr>
</table></td></tr>
<tr><td>P3/P4</td><td>Power factor improving DC reactor</td><td>When not using the power factor improving DC reactor, connect P3 and P4. (factory-wired)
When using the power factor improving DC reactor, disconnect P3 and P4, and connect the power factor improving DC reactor to P3 and P4. Additionally, the power factor improving DC reactor cannot be used for the 100 V class servo amplifiers.
Refer to section 11.11 for details.</td></tr>
<tr><td>P+/C/D</td><td>Regenerative option</td><td>(1) 200 V class/100 V class
1) MR-J4-500B(-RJ) or less and MR-J4-40B1(-RJ) or less
When using a servo amplifier built-in regenerative resistor, connect P+ and D. (factory-wired)
When using a regenerative option, disconnect P+ and D, and connect the regenerative option to P+ and C.
2) MR-J4-700B(-RJ) to MR-J4-22KB(-RJ)
MR-J4-700B(-RJ) to MR-J4-22KB(-RJ) do not have D.
When using a servo amplifier built-in regenerative resistor, connect P+ and C. (factory-wired)
When using a regenerative option, disconnect wires of P+ and C for the built-in regenerative resistor. And then connect wires of the regenerative option to P+ and C.
(2) 400 V class
1) MR-J4-350B4(-RJ) or less
When using a servo amplifier built-in regenerative resistor, connect P+ and D. (factory-wired)
When using a regenerative option, disconnect P+ and D, and connect the regenerative option to P+ and C.
2) MR-J4-500B4(-RJ) to MR-J4-22KB4(-RJ)
MR-J4-500B4(-RJ) to MR-J4-22KB4(-RJ) do not have D.
When using a servo amplifier built-in regenerative resistor, connect P+ and C. (factory-wired)
When using a regenerative option, disconnect wires of P+ and C for the built-in regenerative resistor. And then connect wires of the regenerative option to P+ and C.
Refer to section 11.2 for details.</td></tr>
</table>

<table>
<tr><th>Symbol</th><th>Connection target (application)</th><th>Description</th></tr>
<tr><td>L11/L21</td><td>Control circuit power supply</td><td>Supply the following power to L11 and L21.
<table>
<tr><th>Servo amplifier / Power</th><th>MR-J4-10B(-RJ) to MR-J4-22KB(-RJ)</th><th>MR-J4-60B4(-RJ) to MR-J4-22KB4(-RJ)</th><th>MR-J4-10B1 to MR-J4-40B1</th></tr>
<tr><td>1-phase 200 V AC to 240 V AC, 50 Hz/60 Hz</td><td>L11/L21</td><td></td><td></td></tr>
<tr><td>1-phase 380 V AC to 480 V AC, 50 Hz/60 Hz</td><td></td><td>L11/L21</td><td></td></tr>
<tr><td>1-phase 100 V AC to 120 V AC, 50 Hz/60 Hz</td><td></td><td></td><td>L11/L21</td></tr>
</table></td></tr>
<tr><td>U/V/W</td><td>Servo motor power output</td><td>Connect the servo amplifier power output (U, V, and W) to the servo motor power input (U, V, and W) directly. Do not let a magnetic contactor, etc. intervene. Otherwise, it may cause a malfunction.</td></tr>
<tr><td>N-</td><td>Power regeneration converter
Power regeneration common converter
Brake unit</td><td>This terminal is used for a power regeneration converter, power regeneration common converter and brake unit.
Refer to section 11.3 to 11.5 for details.</td></tr>
<tr><td>⏚</td><td>Protective earth (PE)</td><td>Connect it to the grounding terminal of the servo motor and to the protective earth (PE) of the cabinet for grounding.</td></tr>
</table>

3.3.2 Power-on sequence

POINT
●A voltage, output signal, etc. of analog monitor output may be irregular at power-on.

(1) Power-on procedure

1) Always wire the power supply as shown in above section 3.1 using the magnetic contactor with the main circuit power supply (L1/L2/L3). Configure up an external sequence to switch off the magnetic contactor as soon as an alarm occurs.

2) Switch on the control circuit power supply (L11 and L21) simultaneously with the main circuit power supply or before switching on the main circuit power supply. If the control circuit power supply is turned on with the main circuit power supply off, and then the servo-on command is transmitted, [AL. E9 Main circuit off warning] will occur. Turning on the main circuit power supply stops the warning and starts the normal operation.

3) The servo amplifier receives the servo-on command within 3 s to 4 s after the main circuit power supply is switched on.
(Refer to (2) of this section.)

(2) Timing chart

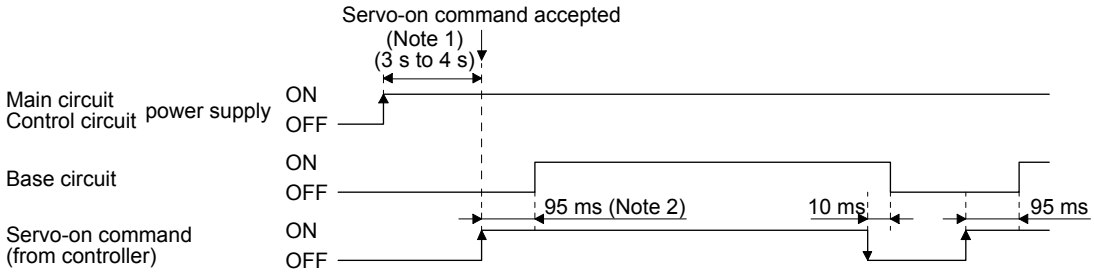

Note 1. This range will be "5 s to 6 s" for the linear servo system and fully closed loop system.
2. The time will be longer during the magnetic pole detection of a linear servo motor and direct drive motor.

3.3.3 Wiring CNP1, CNP2, and CNP3

POINT
●For the wire sizes used for wiring, refer to section 11.9. ●MR-J4-500B(-RJ) or more and MR-J4-500B4(-RJ) or more do not have these connectors.

Use the servo amplifier power connector for wiring CNP1, CNP2, and CNP3.

(1) Connector

(a) MR-J4-10B(-RJ) to MR-J4-100B(-RJ)

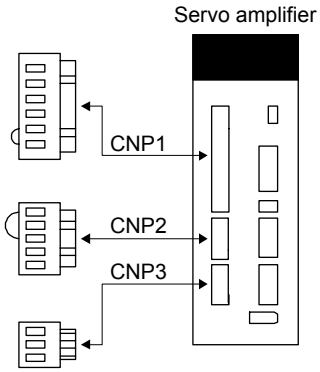

Table 3.1 Connector and applicable wire

Connector	Receptacle assembly	Applicable wire		Stripped length [mm]	Open tool	Manufacturer
		Size	Insulator OD			
CNP1	06JFAT-SAXGDK-H7.5	AWG 18 to 14	39 mm or shorter	9	J-FAT-OT	JST
CNP2	05JFAT-SAXGDK-H5.0					
CNP3	03JFAT-SAXGDK-H7.5					

(b) MR-J4-200B(-RJ)/MR-J4-350B(-RJ)

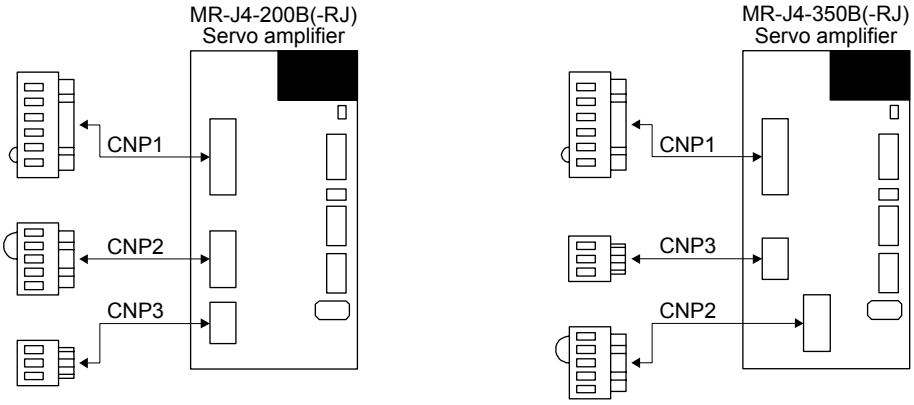

Table 3.2 Connector and applicable wire

Connector	Receptacle assembly	Applicable wire		Stripped length [mm]	Open tool	Manufacturer
		Size	Insulator OD			
CNP1	06JFAT-SAXGFK-XL	AWG 16 to 10	47 mm or shorter	11.5	J-FAT-OT-EXL	JST
CNP3	03JFAT-SAXGFK-XL					
CNP2	05JFAT-SAXGDK-H5.0	AWG 18 to 14	39 mm or shorter	9		

(c) MR-J4-60B4(-RJ) to MR-J4-350B4(-RJ)

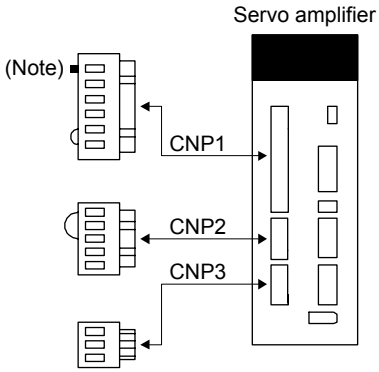

Note. A pin for preventing improper connection is inserted to N- of CNP1 connector.

Table 3.3 Connector and applicable wire

Connector	Receptacle assembly	Applicable wire		Stripped length [mm]	Open tool	Manufacturer
		Size	Insulator OD			
CNP1	06JFAT-SAXGDK-HT10.5	AWG 16 to 14	3.9 mm or shorter	10	J-FAT-OT-XL	JST
CNP2	05JFAT-SAXGDK-HT7.5					
CNP3	03JFAT-SAXGDK-HT10.5					

(d) MR-J4-10B1(-RJ) to MR-J4-40B1(-RJ)

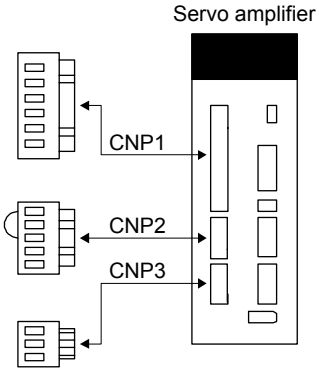

Table 3.4 Connector and applicable wire

Connector	Receptacle assembly	Applicable wire		Stripped length [mm]	Open tool	Manufacturer
		Size	Insulator OD			
CNP1	06JFAT-SAXGDK-H7.5	AWG 18 to 14	39 mm or shorter	9	J-FAT-OT	JST
CNP2	05JFAT-SAXGDK-H5.0					
CNP3	03JFAT-SAXGDK-H7.5					

(2) Cable connection procedure

(a) Fabrication on cable insulator

Refer to table 3.1 to 3.4 for stripped length of cable insulator. The appropriate stripped length of cables depends on their type, etc. Set the length considering their status.

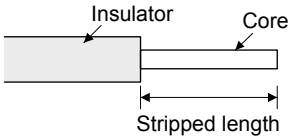

Twist strands lightly and straighten them as follows.

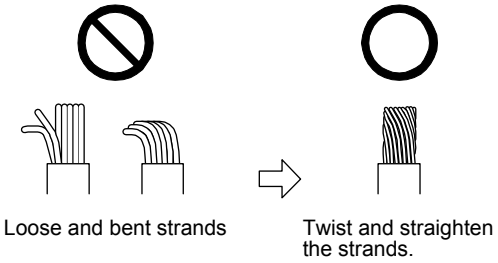

You can also use a ferrule to connect with the connectors. The following shows references to select ferrules according to wire sizes.

Servo amplifier	Wire size	Ferrule model (Phoenix Contact)		Crimping tool (Phoenix Contact)
		For one	For two	
MR-J4-10B(-RJ) to MR-J4-100B(-RJ)	AWG 16	AI1.5-10BK	AI-TWIN2×1.5-10BK	CRIMPFOX-ZA3
	AWG 14	AI2.5-10BU		
MR-J4-200B(-RJ) to MR-J4-350B(-RJ)	AWG 16	AI1.5-10BK	AI-TWIN2×1.5-10BK	
	AWG 14	AI2.5-10BU	AI-TWIN2×2.5-10BU	
	AWG 12	AI4-10GY		
MR-J4-60B4(-RJ) to MR-J4-350B4(-RJ)	AWG 16	AI1.5-10BK	AI-TWIN2×1.5-10BK	
	AWG 14	AI2.5-10BU		
MR-J4-10B1(-RJ) to MR-J4-40B1(-RJ)	AWG 16	AI1.5-10BK	AI-TWIN2×1.5-10BK	
	AWG 14	AI2.5-10BU		

(b) Inserting wire

Insert the open tool as follows and push down it to open the spring. While the open tool is pushed down, insert the stripped wire into the wire insertion hole. Check the insertion depth so that the cable insulator does not get caught by the spring.

Release the open tool to fix the wire. Pull the wire lightly to confirm that the wire is surely connected.

The following shows a connection example of the CNP3 connector for MR-J4-200B(-RJ) and MR-J4-350B(-RJ).

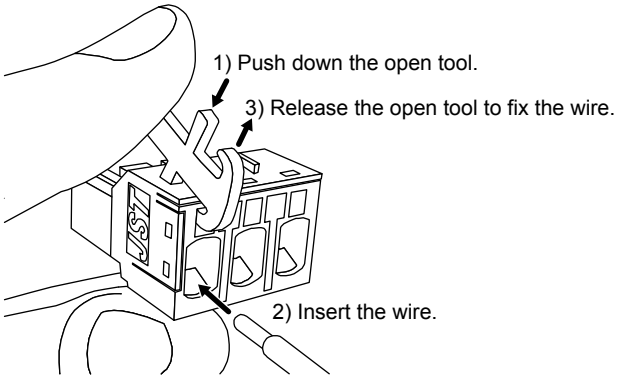

3.4 Connectors and pin assignment

POINT

- The pin assignment of the connectors are as viewed from the cable connector wiring section.
- For the STO I/O signal connector (CN8), refer to chapter 13.
- For the CN3 connector, securely connect the shielded external conductor of the cable to the ground plate and fix it to the connector shell.

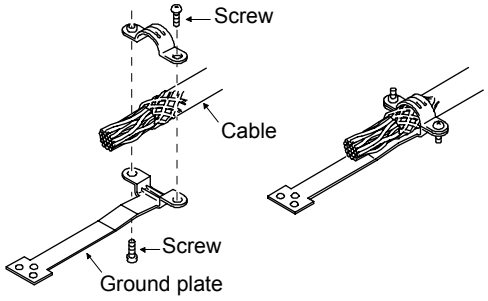

The servo amplifier front view shown is that of the MR-J4-20B-RJ or less. Refer to chapter 9 DIMENSIONS for the appearances and connector layouts of the other servo amplifiers.

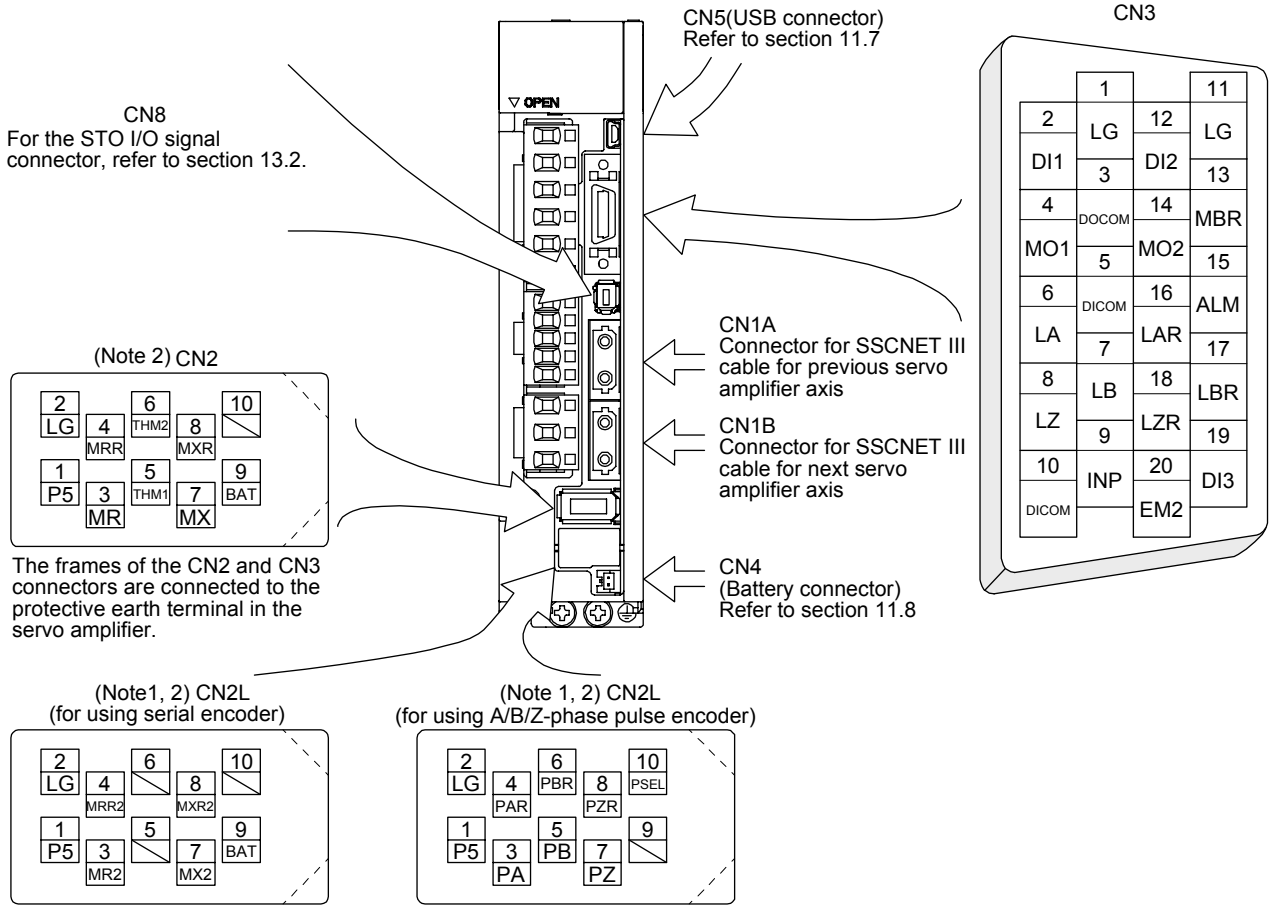

Note 1. The MR-J4-_B_ servo amplifiers have CN2L connectors. This CN2L is a connector of 3M. When using any other connector, refer to each servo motor instruction manual.

2. Refer to table 1.1 for connections of external encoders.

3.5 Signal (device) explanations

For the I/O interfaces (symbols in I/O division column in the table), refer to section 3.8.2.
The pin numbers in the connector pin No. column are those in the initial status.

3.5.1 Input device

<table>
<tr><th>Device</th><th>Symbol</th><th>Connector pin No.</th><th>Function and application</th><th>I/O division</th></tr>
<tr><td>Forced stop 2</td><td>EM2</td><td>CN3-20</td><td>Turn off EM2 (open between commons) to decelerate the servo motor to a stop with commands.
Turn EM2 on (short between commons) in the forced stop state to reset that state.
Set [Pr. PA04] to "2 1 _ _" to disable EM2.
The following shows the setting of [Pr. PA04].
<table>
<tr><th rowspan="2">[Pr. PA04] setting</th><th rowspan="2">EM2/EM1</th><th colspan="2">Deceleration method</th></tr>
<tr><th>EM2 or EM1 is off</th><th>Alarm occurred</th></tr>
<tr><td>0 0 _ _</td><td>EM1</td><td>MBR (Electromagnetic brake interlock) turns off without the forced stop deceleration.</td><td>MBR (Electromagnetic brake interlock) turns off without the forced stop deceleration.</td></tr>
<tr><td>2 0 _ _</td><td>EM2</td><td>MBR (Electromagnetic brake interlock) turns off after the forced stop deceleration.</td><td>MBR (Electromagnetic brake interlock) turns off after the forced stop deceleration.</td></tr>
<tr><td>0 1 _ _</td><td>Not using EM2 or EM1</td><td></td><td>MBR (Electromagnetic brake interlock) turns off without the forced stop deceleration.</td></tr>
<tr><td>2 1 _ _</td><td>Not using EM2 or EM1</td><td></td><td>MBR (Electromagnetic brake interlock) turns off after the forced stop deceleration.</td></tr>
</table>
EM2 and EM1 are mutually exclusive.
EM2 has the same function as EM1 in the torque control mode.</td><td>DI-1</td></tr>
<tr><td>Forced stop 1</td><td>EM1</td><td>(CN3-20)</td><td>When using EM1, set [Pr. PA04] to "0 0 _ _" to enable EM1.
Turn EM1 off (open between commons) to bring the motor to an forced stop state. The base circuit is shut off, the dynamic brake is operated and decelerate the servo motor to a stop.
Turn EM1 on (short between commons) in the forced stop state to reset that state.
Set [Pr. PA04] to "0 1 _ _" to disable EM1.</td><td>DI-1</td></tr>
<tr><td></td><td>DI1</td><td>CN3-2</td><td rowspan="3">Devices can be assigned for these signals with controller setting. For devices that can be assigned, refer to the controller instruction manual. The following devices can be assigned for MR-J4 compatible controller (Q172DSCPU, Q173DSCPU, and QD77MS_).</td><td>DI-1</td></tr>
<tr><td></td><td>DI2</td><td>CN3-12</td><td>DI-1</td></tr>
<tr><td></td><td>DI3</td><td>CN3-19</td><td>DI-1</td></tr>
</table>

3.5.2 Output device

(1) Output device pin

The following shows the output device pins and parameters for assigning devices.

Connector pin No.	Parameter	Initial device	I/O division
CN3-13	[Pr. PD07]	MBR	DO-1
CN3-15	[Pr. PD09]	ALM	
CN3-9	[Pr. PD08]	INP	

(2) Output device explanations

Device	Symbol	Function and application
Electromagnetic brake interlock	MBR	When using the device, set operation delay time of the electromagnetic brake in [Pr. PC02]. When a servo-off status or alarm occurs, MBR will turn off.
Malfunction	ALM	When the protective circuit is activated to shut off the base circuit, ALM will turn off. When an alarm does not occur, ALM will turn on after 2.5 s to 3.5 s after power-on.
In-position	INP	When the number of droop pulses is in the in-position range, INP will turn on. The in-position range can be changed using [Pr. PA10]. When the in-position range is increased, INP may be on during low-speed rotation. The device cannot be used in the speed control mode, torque control mode, and for continuous operation to torque control mode.
Dynamic brake interlock	DB	When using the signal, enable it by the setting of [Pr. PD07] to [Pr. PD09]. DB turns off when the dynamic brake needs to operate. When using the external dynamic brake on the servo amplifier of 11 kW or more, this device is required. (Refer to section 11.17.) For the servo amplifier of 7 kW or less, it is not necessary to use this device.
Ready	RD	Enabling servo-on to make the servo amplifier ready to operate will turn on RD.
Speed reached	SA	SA will turn off during servo-off. When the servo motor speed reaches the following range, SA will turn on. Set speed ± ((Set speed × 0.05) + 20) r/min When the preset speed is 20 r/min or less, SA always turns on. The device cannot be used in the position control mode and torque control mode.
Limiting speed	VLC	When the speed reaches the speed limit value in the torque control mode, VLC will turn on. When the servo is off, TLC will be turned off. The device cannot be used in the position control mode and speed control mode.
Zero speed detection	ZSP	ZSP turns on when the servo motor speed is zero speed (50r/min) or less. Zero speed can be changed with [Pr. PC07]. 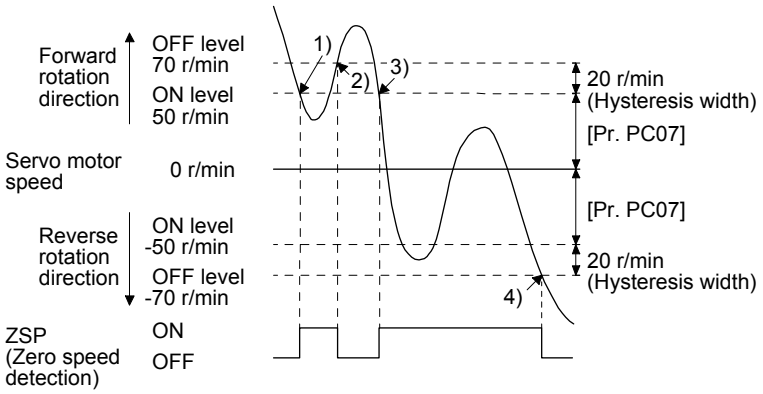 ZSP will turn on when the servo motor is decelerated to 50 r/min (at 1)), and will turn off when the servo motor is accelerated to 70 r/min again (at 2)). ZSP will turn on when the servo motor is decelerated again to 50 r/min (at 3)), and will turn off when the servo motor speed has reached -70 r/min (at 4)). The range from the point when the servo motor speed has reached on level, and ZSP turns on, to the point when it is accelerated again and has reached off level is called hysteresis width. Hysteresis width is 20 r/min for this servo amplifier. When you use a linear servo motor, [r/min] explained above will be [mm/s].

Device	Symbol	Function and application
Limiting torque	TLC	When the torque reaches the torque limit value during torque generation, TLC will turn on. When the servo is off, TLC will be turned off. This device cannot be used in the torque control mode.
Warning	WNG	When warning has occurred, WNG turns on. When a warning is not occurring, turning on the power will turn off WNG after 2.5 s to 3.5 s.
Battery warning	BWNG	BWNG turns on when [AL. 92 Battery cable disconnection warning] or [AL. 9F Battery warning] has occurred. When the battery warning is not occurring, turning on the power will turn off BWNG after 2.5 s to 3.5 s.
Variable gain selection	CDPS	CDPS will turn on during variable gain.
Absolute position undetermined	ABSV	ABSV turns on when the absolute position is undetermined. The device cannot be used in the speed control mode and torque control mode.
During tough drive	MTTR	When a tough drive is enabled in [Pr. PA20], activating the instantaneous power failure tough drive will turn on MTTR.
During fully closed loop control	CLDS	CLDS turns on during fully closed loop control.

3.5.3 Output signal

Signal name	Symbol	Connector pin No.	Function and application
Encoder A-phase pulse (differential line driver)	LA LAR	CN3-6 CN3-16	These devices output pulses of encoder output set in [Pr. PA15] and [Pr. PA16] in the differential line driver type. In CCW rotation of the servo motor, the encoder B-phase pulse lags the encoder A-phase pulse by a phase angle of π/2. The relation between rotation direction and phase difference of the A-phase and B-phase pulses can be changed with [Pr. PC03]. Output pulse specification, dividing ratio setting, and electronic gear setting can be selected.
Encoder B-phase pulse (differential line driver)	LB LBR	CN3-7 CN3-17	
Encoder Z-phase pulse (differential line driver)	LZ LZR	CN3-8 CN3-18	The encoder zero-point signal is output in the differential line driver type. One pulse is output per servo motor revolution. This turns on when the zero-point position is reached. (negative logic) The minimum pulse width is about 400 μs. For home position return using this pulse, set the creep speed to 100 r/min. or less.
Analog monitor 1	MO1	CN3-4	This is used to output the data set in [Pr. PC09] to between MO1 and LG in terms of voltage. Resolution: 10 bits or equivalent
Analog monitor 2	MO2	CN3-14	This signal output the data set in [Pr. PC10] to between MO2 and LG in terms of voltage. Resolution: 10 bits or equivalent

3.5.4 Power supply

Signal name	Symbol	Connector pin No.	Function and application
Digital I/F power supply input	DICOM	CN3-5 CN3-10	Input 24 V DC (24 V DC ± 10% 300 mA) for I/O interface. The power supply capacity changes depending on the number of I/O interface points to be used. For sink interface, connect + of 24 V DC external power supply. For source interface, connect - of 24 V DC external power supply.
Digital I/F common	DOCOM	CN3-3	Common terminal of input signal such as EM2 of the servo amplifier. This is separated from LG. For sink interface, connect - of 24 V DC external power supply. For source interface, connect + of 24 V DC external power supply.
Monitor common	LG	CN3-1 CN3-11	Common terminal of MO1 and MO2. Pins are connected internally.
Shield	SD	Plate	Connect the external conductor of the shielded wire.

3.6 Forced stop deceleration function

POINT

- When alarms not related to the forced stop function occur, control of motor deceleration can not be guaranteed. (Refer to section 8.1.)
- When SSCNET III/H communication brake occurs, forced stop deceleration will operate. (Refer to section 3.7.1 (3).)
- In the torque control mode, the forced stop deceleration function is not available.

3.6.1 Forced stop deceleration function

When EM2 is turned off, dynamic brake will start to stop the servo motor after forced stop deceleration. During this sequence, the display shows [AL. E6 Servo forced stop warning].
During normal operation, do not use EM2 (Forced stop 2) to alternate stop and drive. The the servo amplifier life may be shortened.

(1) Connection diagram

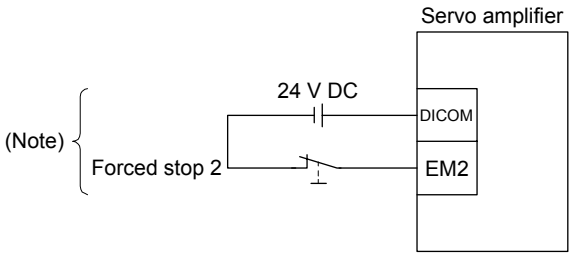

Note. This diagram is for sink I/O interface. For source I/O interface, refer to section 3.8.3.

(2) Timing chart
When EM2 (Forced stop 2) turns off, the motor will decelerate according to [Pr. PC24 Forced stop deceleration time constant]. Once the motor speed is below [Pr. PC07 Zero speed], base power is cut and the dynamic brake activates.

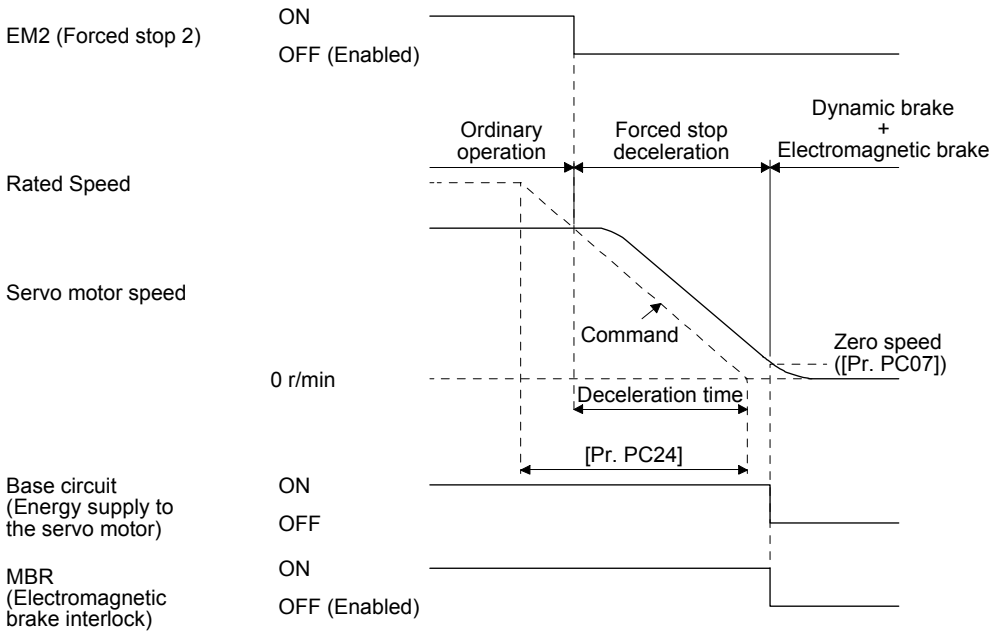

3.6.2 Base circuit shut-off delay time function

The base circuit shut-off delay time function is used to prevent vertical axis from dropping at a forced stop (EM2 goes off), alarm occurrence, or SSCNET III/H communication brake due to delay time of the electromagnetic brake. Set the time from MBR (Electromagnetic brake interlock) off to base circuit shut-off with [Pr. PC02].

(1) Timing chart

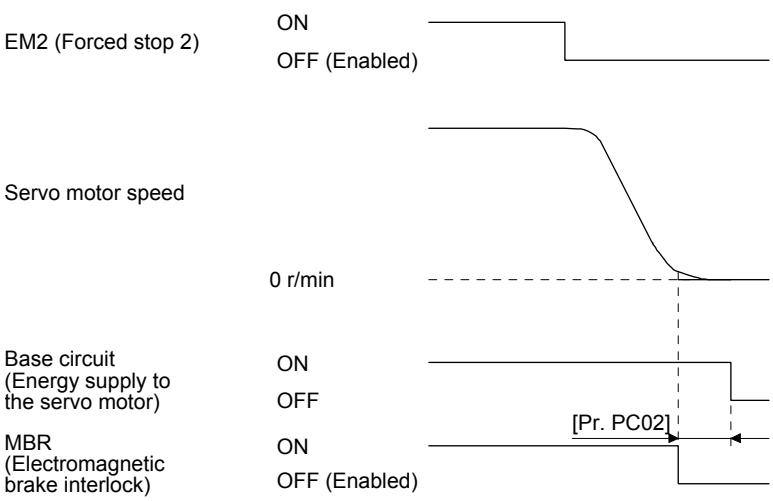

When EM2 (Forced stop 2) turns off or an alarm occurs during driving, the servo motor will decelerate based on the deceleration time constant. MBR (Electromagnetic brake interlock) will turn off, and then after the delay time set in [Pr. PC02], the servo amplifier will be base circuit shut-off status.

(2) Adjustment

While the servo motor is stopped, turn off EM2 (Forced stop 2), adjust the base circuit shut-off delay time in [Pr. PC02], and set the value to approximately 1.5 times of the smallest delay time in which the servo motor shaft does not freefall.

3.6.3 Vertical axis freefall prevention function

The vertical axis freefall prevention function avoids machine damage by pulling up the shaft slightly like the following case.
When the servo motor is used for operating vertical axis, the servo motor electromagnetic brake and the base circuit shut-off delay time function avoid dropping axis at forced stop. However, the functions may not avoid dropping axis a few μm due to the backlash of the servo motor electromagnetic brake.
The vertical axis freefall prevention function is enabled with the following conditions.

- Other than "0" is set to [Pr. PC31 Vertical axis freefall prevention compensation amount].
- EM2 (Forced stop 2) turned off, an alarm occurred, or SSCNET III/H communication brake occurred while the servo motor speed is zero speed or less.
- The base circuit shut-off delay time function is enabled.

(1) Timing chart

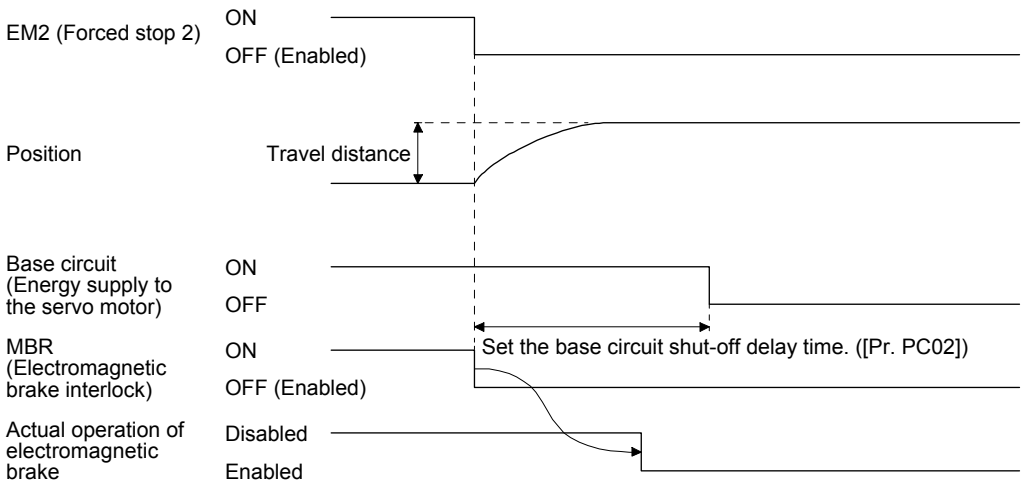

(2) Adjustment

- Set the freefall prevention compensation amount in [Pr. PC31].
- While the servo motor is stopped, turn off the EM2 (Forced stop 2). Adjust the base circuit shut-off delay time in [Pr. PC02] in accordance with the travel distance ([Pr. PC31). Adjust it considering the freefall prevention compensation amount by checking the servo motor speed, torque ripple, etc.

3.6.4 Residual risks of the forced stop function (EM2)

(1) The forced stop function is not available for alarms that activate the dynamic brake when the alarms occur.

(2) When an alarm that activates the dynamic brake during forced stop deceleration occurs, the braking distance until the servo motor stops will be longer than that of normal forced stop deceleration without the dynamic brake.

(3) If STO is turned off during forced stop deceleration, [AL.63 STO timing error] will occur.

3.7 Alarm occurrence timing chart

⚠CAUTION	●When an alarm has occurred, remove its cause, make sure that the operation signal is not being input, ensure safety, and reset the alarm before restarting operation.

POINT
●In the torque control mode, the forced stop deceleration function is not available.

To deactivate the alarm, cycle the control circuit power or give the error reset or CPU reset command from the servo system controller. However, the alarm cannot be deactivated unless its cause is removed.

3.7.1 When you use the forced stop deceleration function

POINT
●To enable the function, set "2 _ _ _ (initial value)" in [Pr. PA04].

(1) When the forced stop deceleration function is enabled

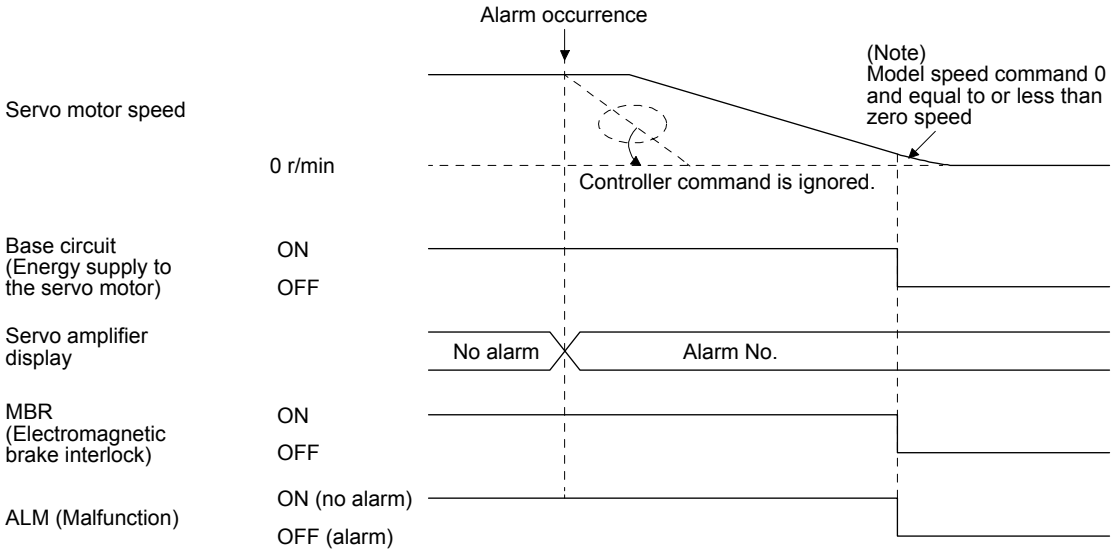

Note. The model speed command is a speed command generated in the servo amplifier for forced stop deceleration of the servo motor.

(2) When the forced stop deceleration function is not enabled

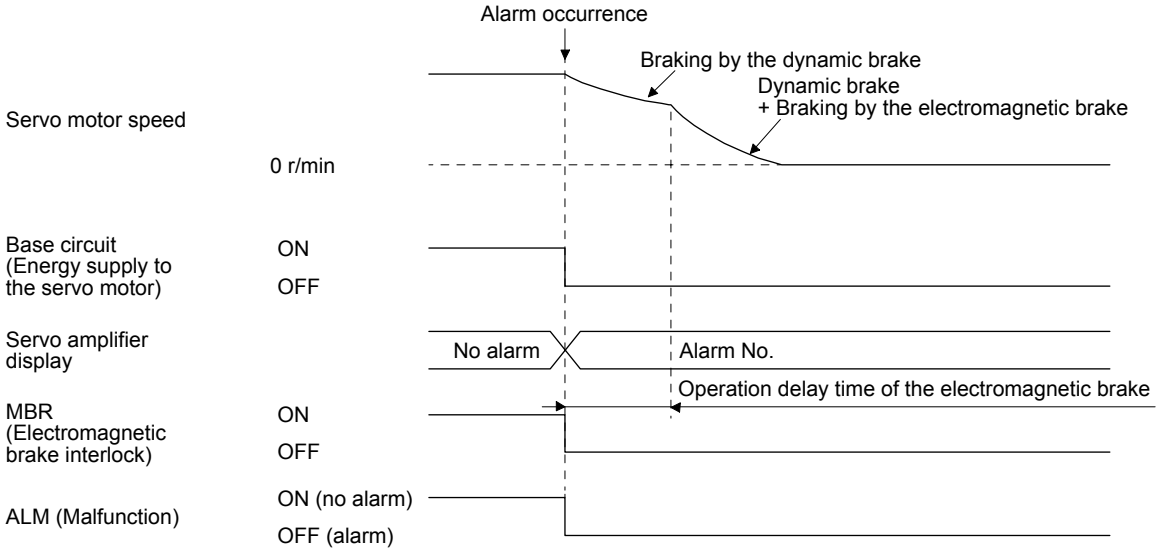

(3) When SSCNET III/H communication brake occurs
The dynamic brake may operate depending on the communication shut-off status.

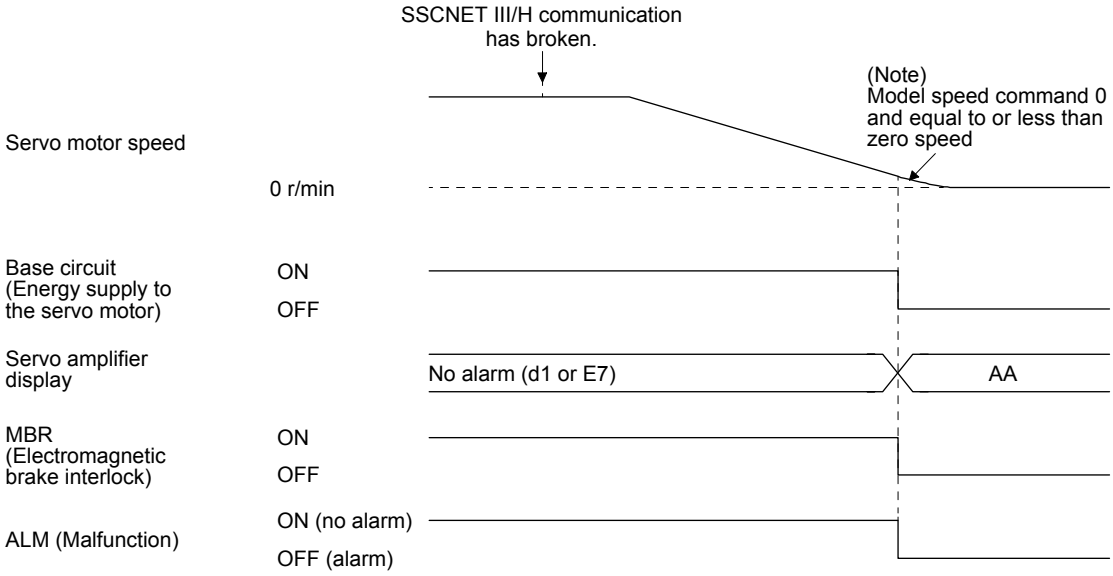

Note. The model speed command is a speed command generated in the servo amplifier for forced stop deceleration of the servo motor.

3.7.2 When you do not use the forced stop deceleration function

POINT
●To disable the function, set "0 _ _ _" in [Pr. PA04].

The timing chart that shows the servo motor condition when an alarm or SSCNET III/H communication brake occurs is the same as section 3.7.1 (2).

3.8 Interfaces

3.8.1 Internal connection diagram

POINT
●Refer to section 13.3.1 for the CN8 connector.

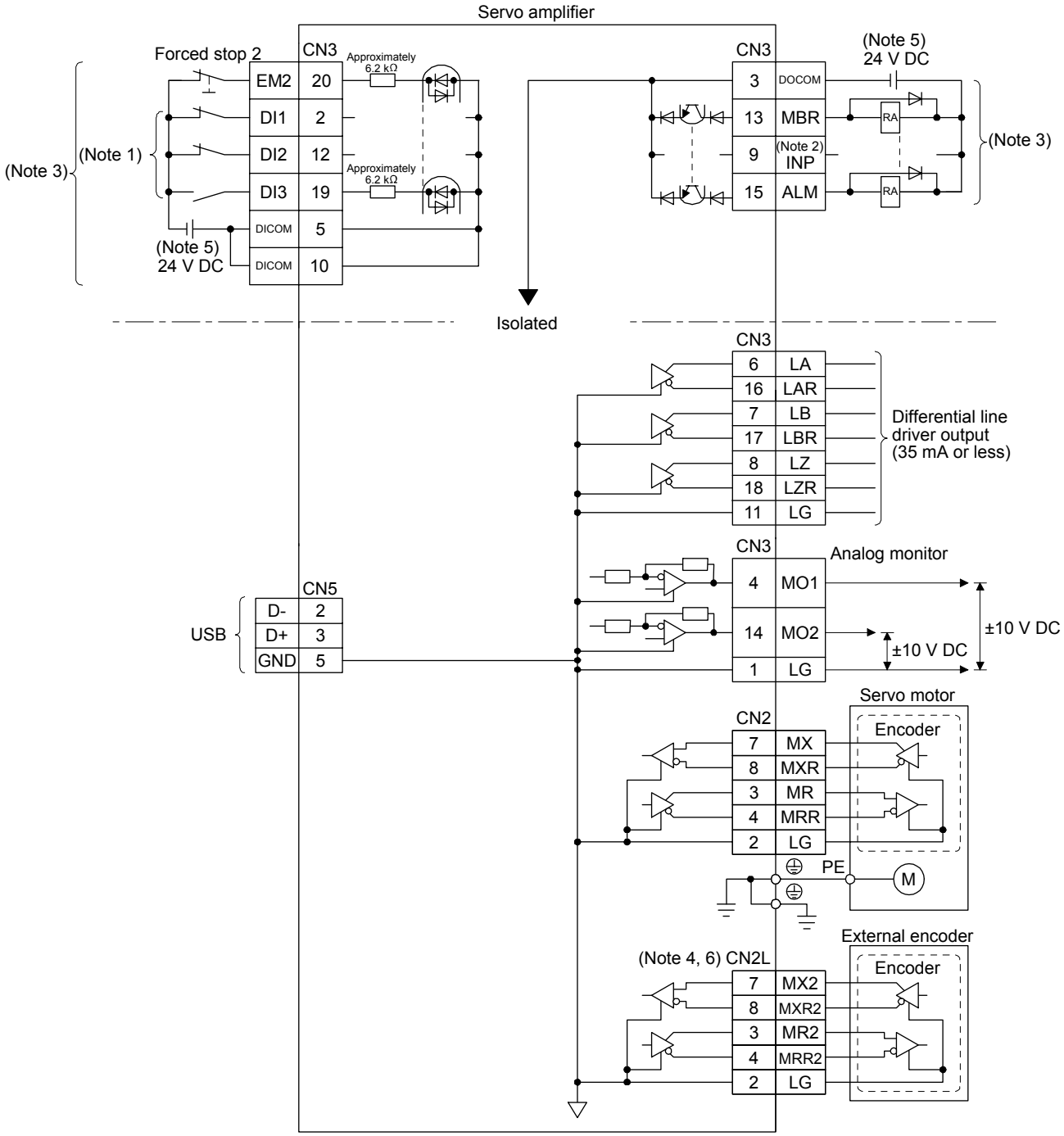

Note 1. Signal can be assigned for these pins with the controller setting.
For contents of signals, refer to the instruction manual of the controller.
2. The signal cannot be used in the speed control mode and torque control mode.
3. This diagram is for sink I/O interface. For source I/O interface, refer to section 3.8.3.
4. This is for MR-J4-_B_-RJ servo amplifier. MR-J4-_B_ servo amplifier does not have CN2L connector.
5. The illustration of the 24 V DC power supply is divided between input signal and output signal for convenience. However, they can be configured by one.
6. Refer to table 1.1 for connections of external encoders.

3.8.2 Detailed explanation of interfaces

This section provides the details of the I/O signal interfaces (refer to the I/O division in the table) given in section 3.5. Refer to this section and make connection with the external device.

(1) Digital input interface DI-1

This is an input circuit whose photocoupler cathode side is input terminal. Transmit signals from sink (open-collector) type transistor output, relay switch, etc. The following is a connection diagram for sink input. Refer to section 3.8.3 for source input.

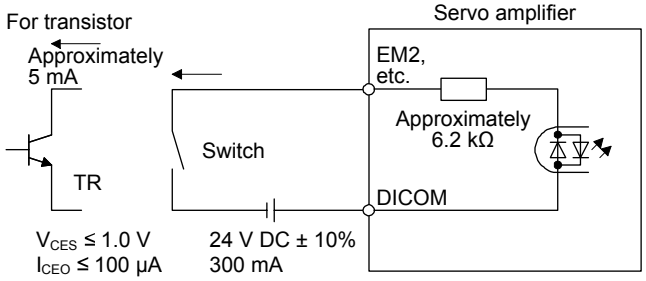

(2) Digital output interface DO-1

This is a circuit of collector output terminal of the output transistor. When the output transistor is turned on, collector terminal current will be applied for the output.

A lamp, relay or photocoupler can be driven. Install a diode (D) for an inductive load, or install an inrush current suppressing resistor (R) for a lamp load.

(Rated current: 40 mA or less, maximum current: 50 mA or less, inrush current: 100 mA or less) A maximum of 2.6 V voltage drop occurs in the servo amplifier.

The following shows a connection diagram for sink output. Refer to section 3.8.3 for source output.

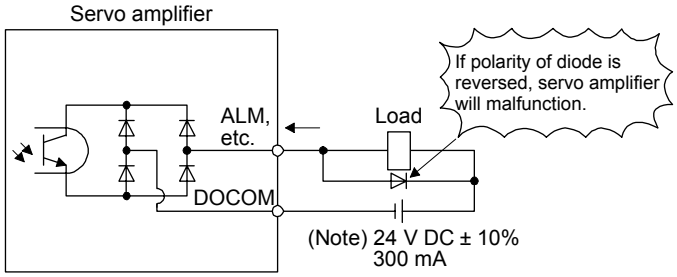

Note. If the voltage drop (maximum of 2.6 V) interferes with the relay operation, apply high voltage (maximum of 26.4 V) from external source.

(3) Encoder output pulses DO-2 (differential line driver type)

(a) Interface

Maximum output current: 35 mA

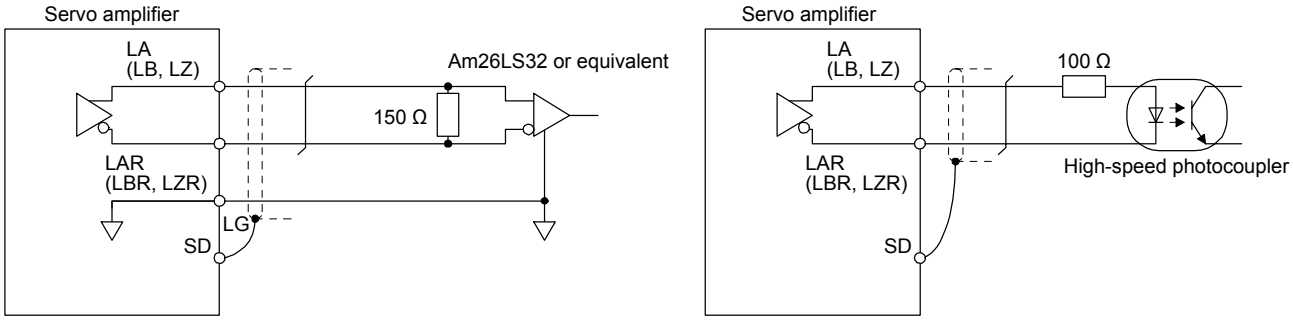

(b) Output pulse

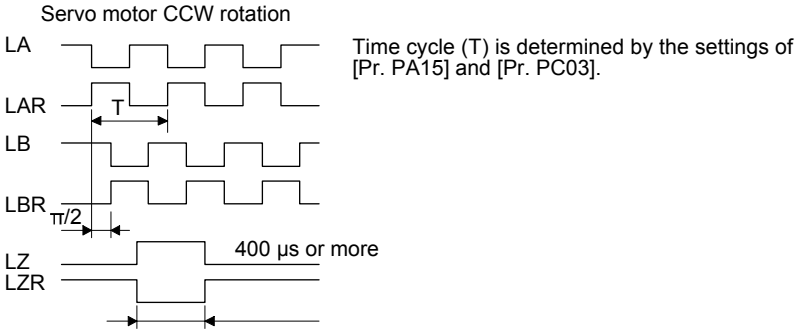

(4) Analog output

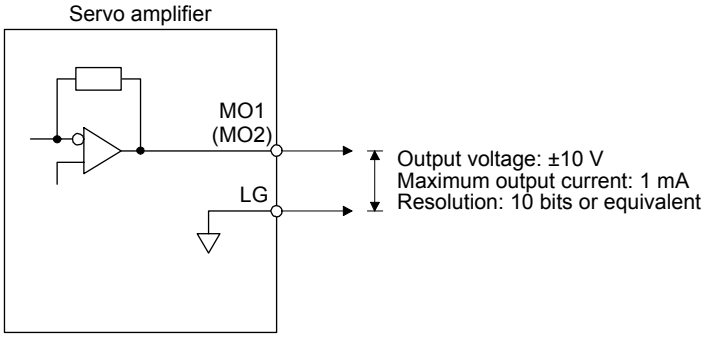

Note. Output voltage range varies depending on the output contents.

3.8.3 Source I/O interfaces

In this servo amplifier, source type I/O interfaces can be used.

(1) Digital input interface DI-1
This is an input circuit whose photocoupler anode side is input terminal. Transmit signals from source (open-collector) type transistor output, relay switch, etc.

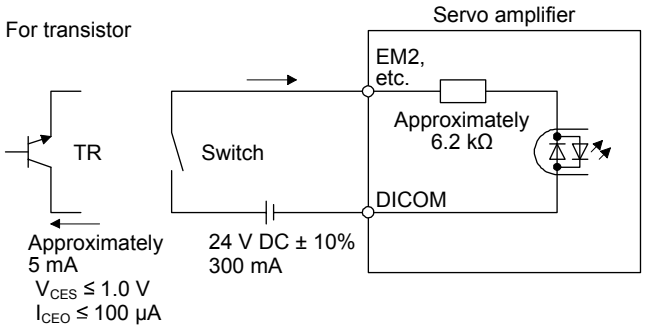

(2) Digital output interface DO-1
This is a circuit of emitter output terminal of the output transistor. When the output transistor is turned on, current will be applied from the output to a load.
A maximum of 2.6 V voltage drop occurs in the servo amplifier.

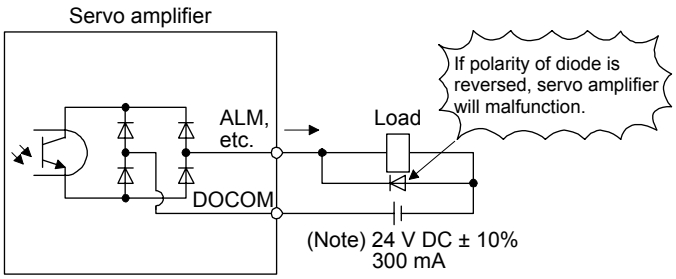

Note. If the voltage drop (maximum of 2.6 V) interferes with the relay operation, apply high voltage (maximum of 26.4 V) from external source.

3.9 SSCNET III cable connection

POINT

●Do not look directly at the light generated from CN1A/CN1B connector of the servo amplifier or the end of SSCNET III cable. The light can be a discomfort when it enters the eye.

(1) SSCNET III cable connection

For the CN1A connector, connect the SSCNET III cable connected to a controller in host side or a servo amplifier of the previous axis. For CN1B connector, connect SSCNET III cable connected to servo amplifier of the next axis. For CN1B connector of the final axis, put a cap came with servo amplifier.

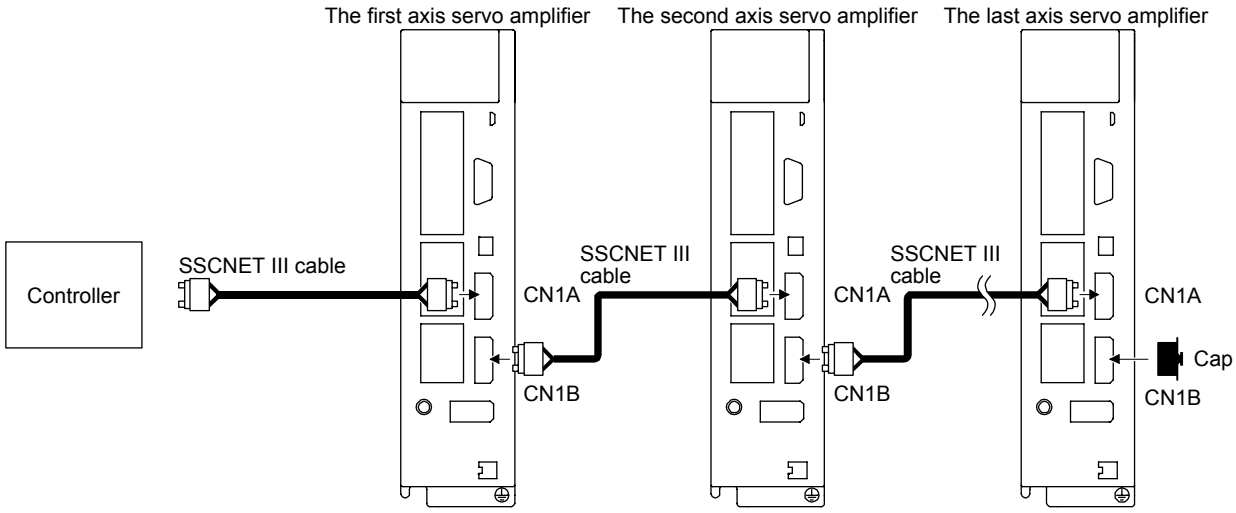

(2) How to connect/disconnect cable

POINT

●CN1A and CN1B connector are capped to protect light device inside connector from dust. For this reason, do not remove a cap until just before mounting SSCNET III cable. Then, when removing SSCNET III cable, make sure to put a cap.

●Keep the cap for CN1A/CN1B connector and the tube for protecting optical cord end of SSCNET III cable in a plastic bag with a zipper of SSCNET III cable to prevent them from becoming dirty.

●When asking repair of servo amplifier for some malfunctions, make sure to cap CN1A and CN1B connector. When the connector is not put a cap, the light device may be damaged at the transit. In this case, replacing and repairing the light device is required.

(a) Connection

1) For SSCNET III cable in the shipping status, the tube for protect optical cord end is put on the end of connector. Remove this tube.

2) Remove the CN1A and CN1B connector caps of the servo amplifier.

3) With holding a tab of SSCNET III cable connector, make sure to insert it into the CN1A and CN1B connector of the servo amplifier until you hear the click. If the end face of optical cord tip is dirty, optical transmission is interrupted and it may cause malfunctions. If it becomes dirty, wipe with a bonded textile, etc. Do not use solvent such as alcohol.

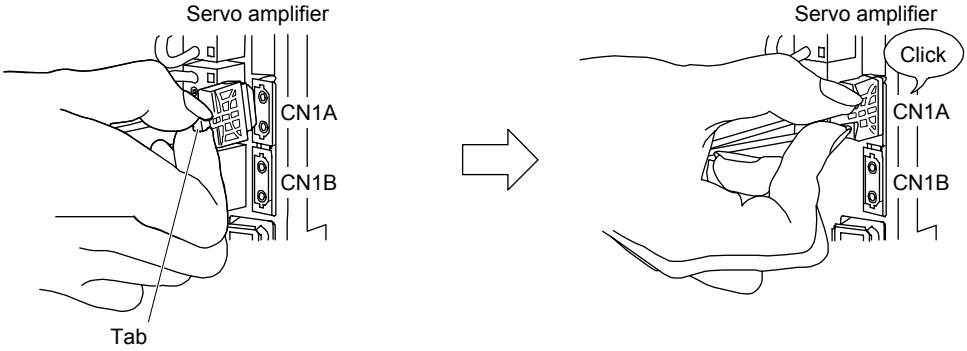

(b) Disconnection

With holding a tab of SSCNET III cable connector, pull out the connector.

When pulling out the SSCNET III cable from servo amplifier, be sure to put the cap on the connector parts of servo amplifier to prevent it from becoming dirty. For SSCNET III cable, attach the tube for protection optical cord's end face on the end of connector.

3.10 Servo motor with an electromagnetic brake

3.10.1 Safety precautions

⚠CAUTION

●Configure an electromagnetic brake circuit so that it is activated also by an external EMG stop switch.

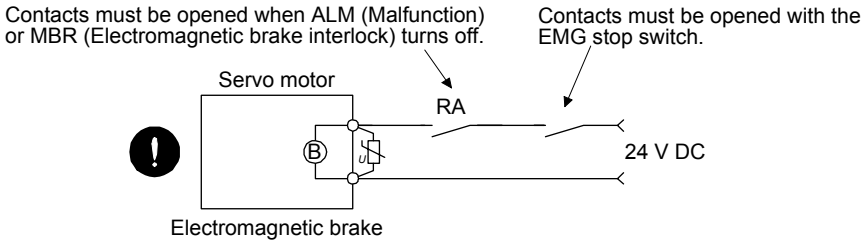

●The electromagnetic brake is provided for holding purpose and must not be used for ordinary braking.

●Before operating the servo motor, be sure to confirm that the electromagnetic brake operates properly.

●Do not use the 24 V DC interface power supply for the electromagnetic brake. Always use the power supply designed exclusively for the electromagnetic brake. Otherwise, it may cause a malfunction.

POINT

●Refer to "Servo Motor Instruction Manual (Vol. 3)" for specifications such as the power supply capacity and operation delay time of the electromagnetic brake.

●Refer to "Servo Motor Instruction Manual (Vol. 3)" for the selection of a surge absorber for the electromagnetic brake.

Note the following when the servo motor with an electromagnetic brake is used.

1) The brake will operate when the power (24 V DC) turns off.

2) Turn off the servo-on command after the servo motor stopped.

(1) Connection diagram

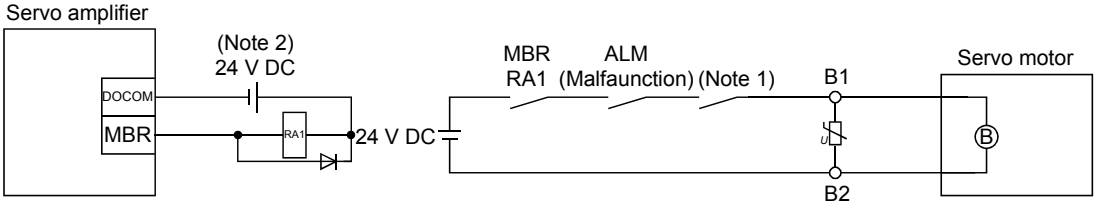

Note 1. Create the circuit in order to shut off by interlocking with the emergency stop switch.
2. Do not use the 24 V DC interface power supply for the electromagnetic brake.

(2) Setting

In [Pr. PC02 Electromagnetic brake sequence output], set a delay time (Tb) from MBR (Electromagnetic brake interlock) off to base circuit shut-off at a servo-off as in the timing chart in section 3.10.2.

3.10.2 Timing chart

(1) When you use the forced stop deceleration function

POINT
●To enable the function, set "2 _ _ _ (initial value)" in [Pr. PA04].

(a) Servo-on command (from controller) on/off

When servo-on command is turned off, the servo lock will be released after Tb [ms], and the servo motor will coast. If the electromagnetic brake is enabled during servo-lock, the brake life may be shorter. Therefore, set Tb about 1.5 times of the minimum delay time where the moving part will not drop down for a vertical axis system, etc.

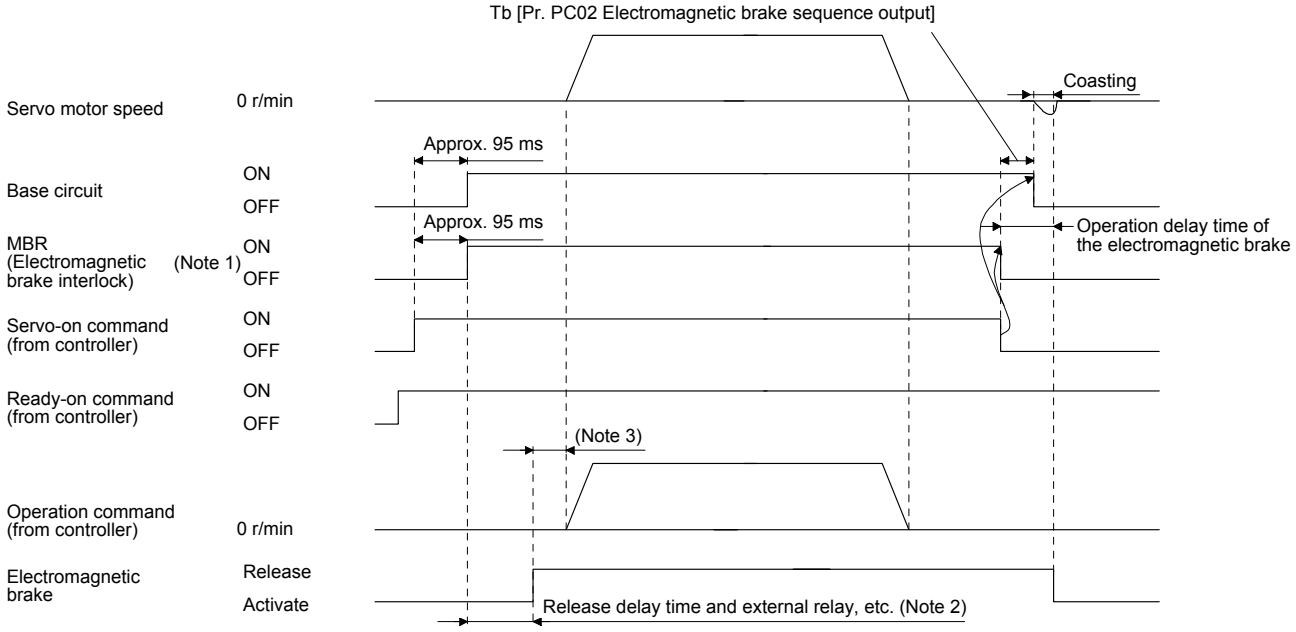

Note 1. ON: Electromagnetic brake is not activated.
OFF: Electromagnetic brake is activated.

2. Electromagnetic brake is released after delaying for the release delay time of electromagnetic brake and operation time of external circuit relay. For the release delay time of electromagnetic brake, refer to "Servo Motor Instruction Manual (Vol. 3)".

3. Give the operation command from the controller after the electromagnetic brake is released.

(b) Forced stop 2 on/off

POINT
●In the torque control mode, the forced stop deceleration function is not available.

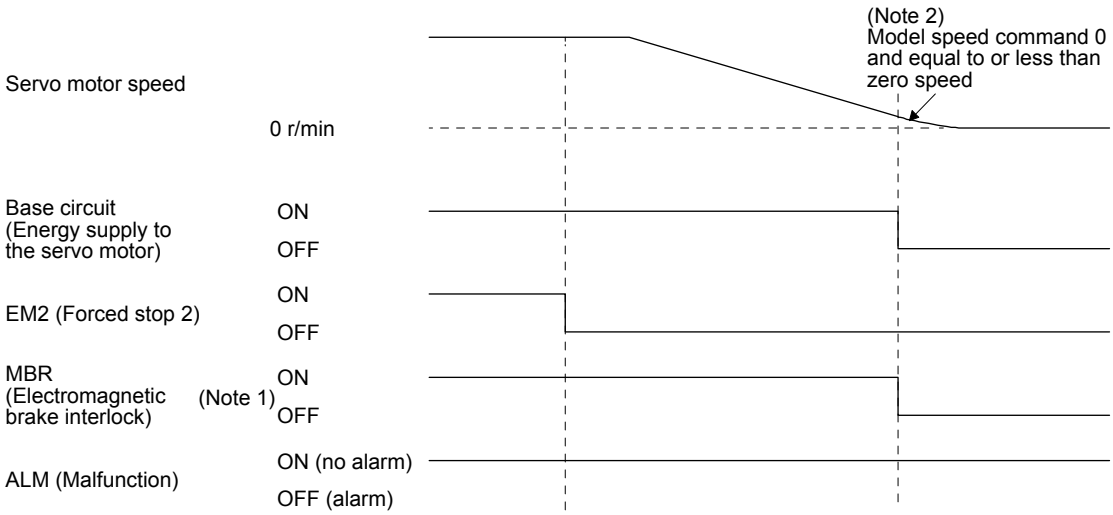

Note 1. ON: Electromagnetic brake is not activated.
OFF: Electromagnetic brake is activated.
2. The model speed command is a speed command generated in the servo amplifier for forced stop deceleration of the servo motor.

(c) Alarm occurrence
The operation status during an alarm is the same as section 3.7.

(d) Both main and control circuit power supplies off

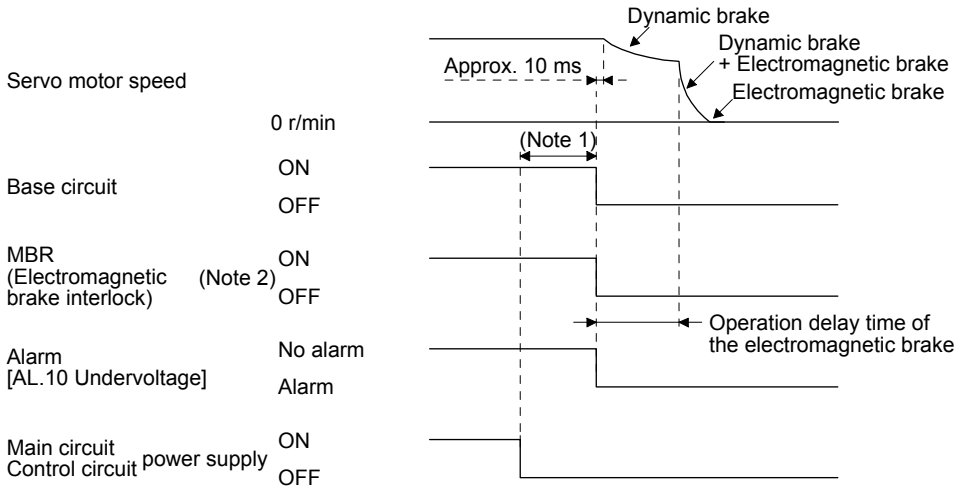

Note 1. Variable according to the operation status.
2. ON: Electromagnetic brake is not activated.
OFF: Electromagnetic brake is activated.

(e) Main circuit power supply off during control circuit power supply on

POINT
●In the torque control mode, the forced stop deceleration function is not available.

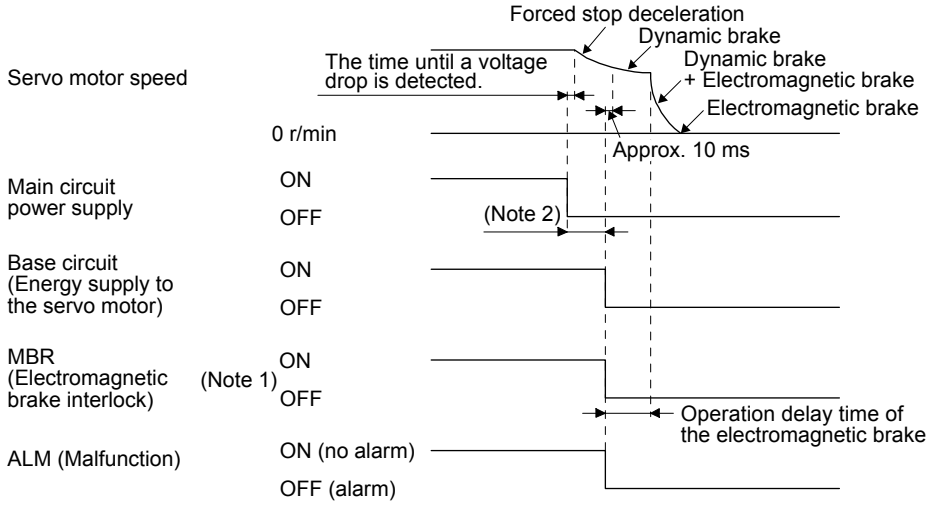

Note 1. ON: Electromagnetic brake is not activated.
OFF: Electromagnetic brake is activated.
2. Variable according to the operation status.

(f) Ready-off command from controller

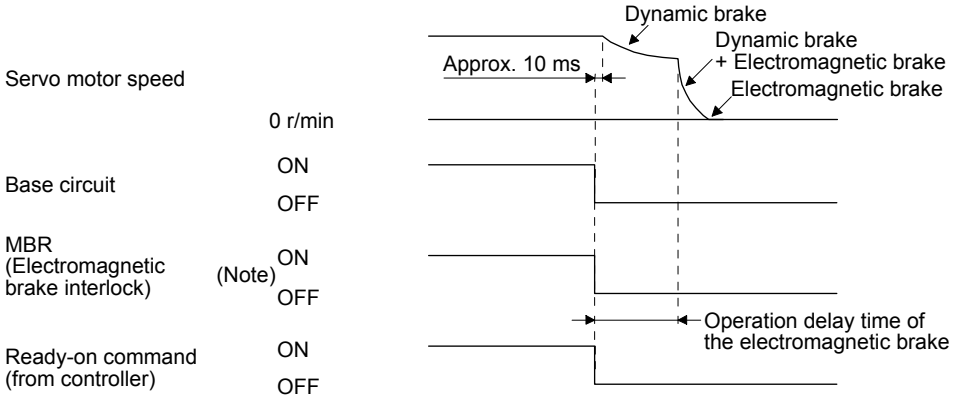

Note. ON: Electromagnetic brake is not activated.
OFF: Electromagnetic brake is activated.

(2) When you do not use the forced stop deceleration function

POINT
●To disable the function, set "0 _ _ _" in [Pr. PA04].

(a) Servo-on command (from controller) on/off
It is the same as (1) (a) in this section.

(b) Off/on of the forced stop command (from controller) or EM1 (Forced stop)

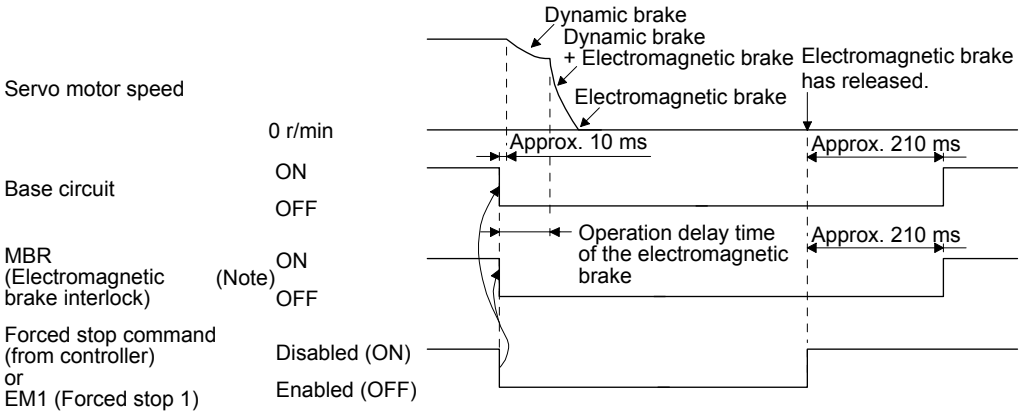

Note. ON: Electromagnetic brake is not activated.
OFF: Electromagnetic brake is activated.

(c) Alarm occurrence
The operation status during an alarm is the same as section 3.7.

(d) Both main and control circuit power supplies off
It is the same as (1) (d) of this section.

(e) Main circuit power supply off during control circuit power supply on

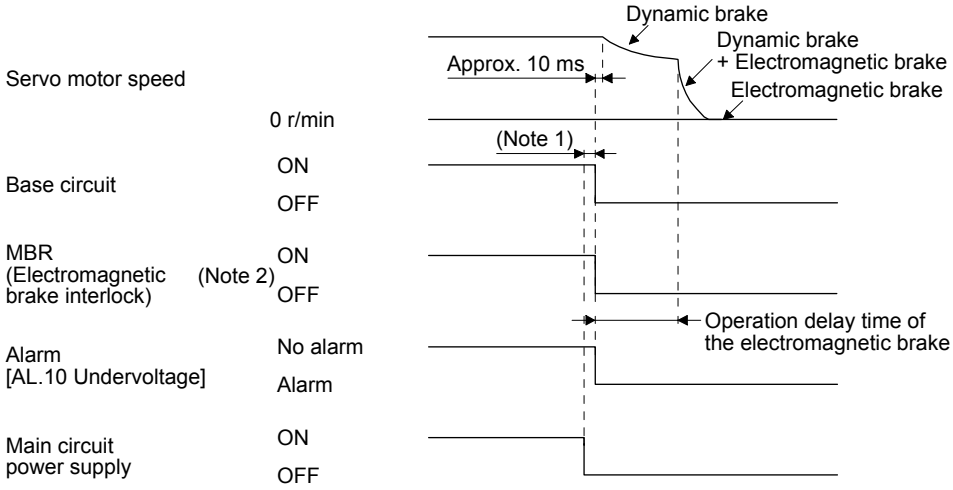

Note 1. Variable according to the operation status.
2. ON: Electromagnetic brake is not activated.
OFF: Electromagnetic brake is activated.

(f) Ready-off command from controller
It is the same as (1) (f) in this section.

3.11 Grounding

> ⚠WARNING
> ●Ground the servo amplifier and servo motor securely.
> ●To prevent an electric shock, always connect the protective earth (PE) terminal (marked ⏚) of the servo amplifier to the protective earth (PE) of the cabinet.

The servo amplifier switches the power transistor on-off to supply power to the servo motor. Depending on the wiring and ground cable routing, the servo amplifier may be affected by the switching noise (due to di/dt and dv/dt) of the transistor. To prevent such a fault, refer to the following diagram and always ground.
To conform to the EMC Directive, refer to the EMC Installation Guidelines (IB(NA)67310).

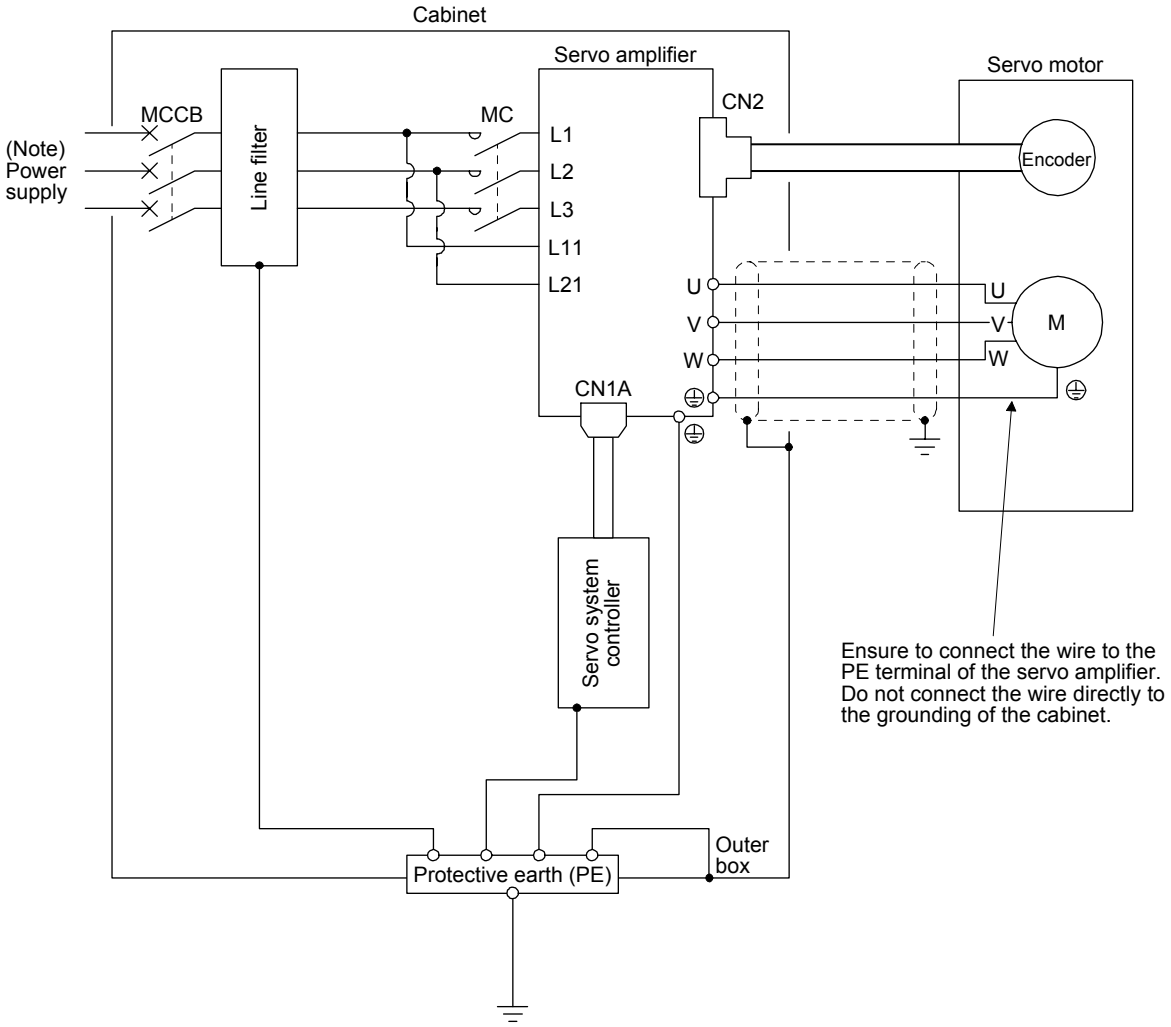

Note. For the power supply specifications, refer to section 1.3.

4. STARTUP

⚠WARNING	●Do not operate the switches with wet hands. Otherwise, it may cause an electric shock.

⚠CAUTION	●Before starting operation, check the parameters. Improper settings may cause some machines to operate unexpectedly. ●The servo amplifier heat sink, regenerative resistor, servo motor, etc. may be hot while power is on or for some time after power-off. Take safety measures, e.g. provide covers, to prevent accidental contact of hands and parts (cables, etc.) with them. ●During operation, never touch the rotor of the servo motor. Otherwise, it may cause injury.

POINT

●When you use a linear servo motor, replace the following left words to the right words.

Load to motor inertia ratio	→ Load to motor mass ratio
Torque	→ Thrust
(Servo motor) speed	→ (Linear servo motor) speed

4. STARTUP

4.1 Switching power on for the first time

When switching power on for the first time, follow this section to make a startup.

4.1.1 Startup procedure

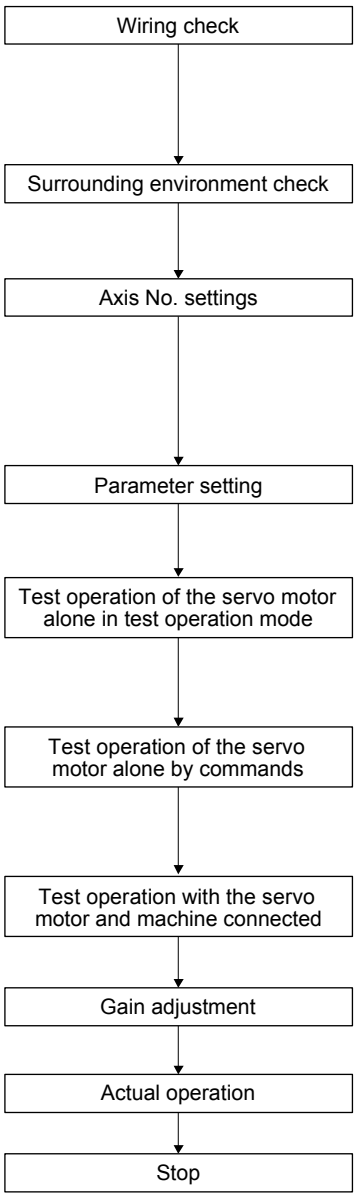

Check whether the servo amplifier and servo motor are wired correctly using visual inspection, DO forced output function (section 4.5.1), etc. (Refer to section 4.1.2.)

Check the surrounding environment of the servo amplifier and servo motor. (Refer to section 4.1.3.)

Confirm that the control axis No. set with the auxiliary axis number setting switches (SW2-3 and SW2-4) and with the axis selection rotary switch (SW1) match the control axis No. set with the servo system controller. (Refer to section 4.3.1 (3).)

Set the parameters as necessary, such as the used operation mode and regenerative option selection. (Refer to chapter 5.)

For the test operation, with the servo motor disconnected from the machine and operated at the speed as low as possible, check whether the servo motor rotates correctly. (Refer to section 4.5.)

For the test operation with the servo motor disconnected from the machine and operated at the speed as low as possible, give commands to the servo amplifier and check whether the servo motor rotates correctly.

After connecting the servo motor with the machine, check machine motions with sending operation commands from the servo system controller.

Make gain adjustment to optimize the machine motions. (Refer to chapter 6.)

Stop giving commands and stop operation.

4.1.2 Wiring check

(1) Power supply system wiring
Before switching on the main circuit and control circuit power supplies, check the following items.

(a) Power supply system wiring
1) The power supplied to the power input terminals (L1, L2, L3, L11, and L21) of the servo amplifier should satisfy the defined specifications. (Refer to section 1.3.)

2) When the power factor improving DC reactor is not used, between P3 and P4 should be connected.

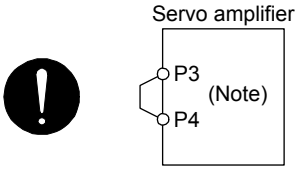

Note. The 100 V class servo amplifiers do not have P3 and P4.

(b) Connection of servo amplifier and servo motor
1) The servo amplifier power output (U, V, and W) should match in phase with the servo motor power input terminals (U, V, and W).

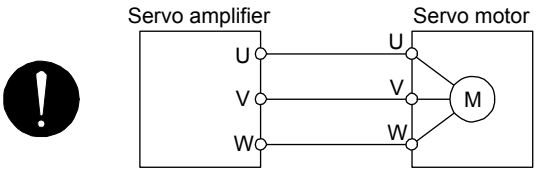

2) The power supplied to the servo amplifier should not be connected to the servo motor power terminals (U, V, and W). To do so will fail the connected servo amplifier and servo motor.

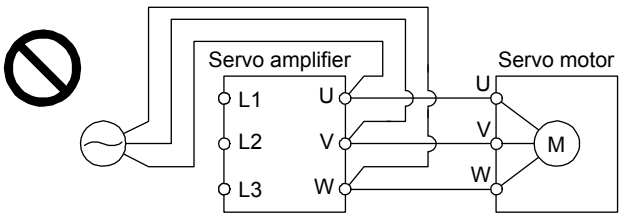

3) The grounding terminal of the servo motor is connected to the PE terminal of the servo amplifier.

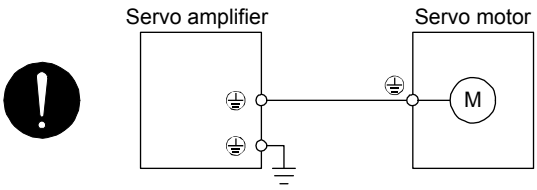

4) The CN2 connector of the servo amplifier should be connected to the encoder of the servo motor securely using the encoder cable.

(c) When you use an option and auxiliary equipment

1) 200 V class

a) When you use a regenerative option for 5 kW or less servo amplifiers

- The lead wire between P+ terminal and D terminal should not be connected.
- The regenerative option wire should be connected between P+ and C terminal.
- A twisted cable should be used. (Refer to section 11.2.4.)

b) When you use a regenerative option for 7 kW or more servo amplifiers

- For 7 kW servo amplifiers, the lead wire of the built-in regenerative resistor connected to P+ terminal and C terminal should not be connected.
- The regenerative option wire should be connected between P+ and C terminal.
- A twisted cable should be used. (Refer to section 11.2.4.)

c) When you use a brake unit and power regeneration converter for 5 kW or more servo amplifiers

- For 5 kW or less servo amplifiers, the lead wire between P+ terminal and D terminal should not be connected.
- For 7 kW servo amplifiers, the lead wire of the built-in regenerative resistor connected to P+ terminal and C terminal should not be connected.
- Brake unit, power regeneration converter should be connected to P+ terminal and N- terminal. (Refer to section 11.3 to 11.4.)
- A twisted cable should be used when wiring is over 5 m and under 10 m using a brake unit. (Refer to section 11.3)

d) When you use a power regeneration common converter

- For 5 kW or less servo amplifiers, the lead wire between P+ terminal and D terminal should not be connected.
- For 7 kW servo amplifiers, the lead wire of built-in regenerative resistor connected to P+ terminal and C terminal should not be connected.
- The wire of power regeneration common converter should be connected to P4 terminal and N- terminal. (Refer to section 11.5.)

e) The power factor improving DC reactor should be connected between P3 and P4. (Refer to section 11.11.)

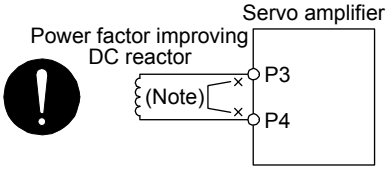

Note. Always disconnect between P3 and P4 terminals.

2) 400 V class

a) When you use a regenerative option for 3.5 kW or less servo amplifiers

- The lead wire between P+ terminal and D terminal should not be connected.
- The regenerative option should be connected to P+ terminal and C terminal.
- A twisted cable should be used. (Refer to section 11.2.4.)

b) When you use a regenerative option for 5 kW or more servo amplifiers

- For 5 kW or 7 kW servo amplifiers, the lead wire of the built-in regenerative resistor connected to P+ terminal and C terminal should not be connected.
- The regenerative option should be connected to P+ terminal and C terminal.
- A twisted cable should be used. (Refer to section 11.2.4.)

c) When you use a brake unit and power regeneration converter for 5 kW or more servo amplifiers
- For 5 kW or 7 kW servo amplifiers, the lead wire of the built-in regenerative resistor connected to P+ terminal and C terminal should not be connected.
- Brake unit, power regeneration converter should be connected to P+ terminal and N- terminal. (Refer to section 11.3 to 11.4.)
- A twisted cable should be used when wiring is over 5 m and under 10 m using a brake unit. (Refer to section 11.3)

d) When you use a power regeneration common converter for 11 kW or more servo amplifiers
- Power regeneration common converter should be connected to P4 terminal and N- terminal. (Refer to section 11.5.)

e) The power factor improving DC reactor should be connected between P3 and P4. (Refer to section 11.11.)

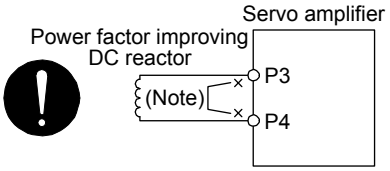

Note. Always disconnect between P3 and P4.

3) 100 V class
- The lead wire between P+ terminal and D terminal should not be connected.
- The regenerative option should be connected to P+ terminal and C terminal.
- A twisted cable should be used. (Refer to section 11.2.4.)

(2) I/O signal wiring

(a) The I/O signals should be connected correctly.
Use DO forced output to forcibly turn on/off the pins of the CN3 connector. This function can be used to perform a wiring check. In this case, switch on the control circuit power supply only.
Refer to section 3.2 for details of I/O signal connection.

(b) 24 V DC or higher voltage is not applied to the pins of the CN3 connector.

(c) SD and DOCOM of the CN3 connector is not shorted.

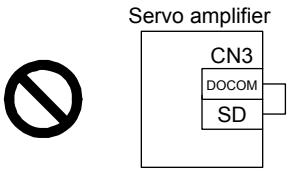

4.1.3 Surrounding environment

(1) Cable routing

(a) The wiring cables should not be stressed.

(b) The encoder cable should not be used in excess of its bending life. (Refer to section 10.4.)

(c) The connector of the servo motor should not be stressed.

(2) Environment

Signal cables and power cables are not shorted by wire offcuts, metallic dust or the like.

4.2 Startup

Connect the servo motor with a machine after confirming that the servo motor operates properly alone.

(1) Power on

When the main and control circuit power supplies are turned on, "b01" (for the first axis) appears on the servo amplifier display.
When the absolute position detection system is used in a rotary servo motor, first power-on results in [AL. 25 Absolute position erased] and the servo-on cannot be ready. The alarm can be deactivated by then switching power off once and on again.
Also, if power is switched on at the servo motor speed of 3000 r/min or higher, position mismatch may occur due to external force or the like. Power must therefore be switched on when the servo motor is at a stop.

(2) Parameter setting

POINT
●The following encoder cables are of four-wire type. When using any of these encoder cables, set [Pr. PC04] to "1 _ _ _" to select the four-wire type. Incorrect setting will result in [AL. 16 Encoder initial communication error 1]. MR-EKCBL30M-L MR-EKCBL30M-H MR-EKCBL40M-H MR-EKCBL50M-H

Set the parameters according to the structure and specifications of the machine. Refer to chapter 5 for details.
After setting the above parameters, turn power off as necessary. Then switch power on again to enable the parameter values.

(3) Servo-on

Enable the servo-on with the following procedure.

(a) Switch on main circuit power supply and control circuit power supply.

(b) Transmit the servo-on command with the servo system controller.

When the servo-on status is enabled, the servo amplifier is ready to operate and the servo motor is locked.

(4) Home position return

Always perform home position return before starting positioning operation.

(5) Stop

If any of the following situations occurs, the servo amplifier suspends the running of the servo motor and brings it to a stop.

Refer to section 3.10 for the servo motor with an electromagnetic brake.

	Operation/command	Stopping condition
Servo system controller	Servo-off command	The base circuit is shut off and the servo motor coasts.
	Ready-off command	The base circuit is shut off and the dynamic brake operates to bring the servo motor to a stop.
	Forced stop command	The servo motor decelerates to a stop with the command. [AL. E7 Controller forced stop warning] occurs.
Servo amplifier	Alarm occurrence	The servo motor decelerates to a stop with the command. With some alarms, however, the dynamic brake operates to bring the servo motor to a stop. (Refer to section 8. (Note))
	EM2 (Forced stop 2) off	The servo motor decelerates to a stop with the command. [AL. E6 Servo forced stop warning] occurs. EM2 has the same function as EM1 in the torque control mode. Refer to section 3.5 for EM1.
	STO (STO1, STO2) off	The base circuit is shut off and the dynamic brake operates to bring the servo motor to a stop.

Note. Only a list of alarms and warnings is listed in chapter 8. Refer to "MELSERVO-J4 Servo Amplifier Instruction Manual (Troubleshooting)" for details of alarms and warnings.

4.3 Switch setting and display of the servo amplifier

Switching to the test operation mode, deactivating control axes, and setting control axis No. are enabled with switches on the servo amplifier.
On the servo amplifier display (three-digit, seven-segment LED), check the status of communication with the servo system controller at power-on, and the axis number, and diagnose a malfunction at occurrence of an alarm.

4.3.1 Switches

⚠WARNING	●When switching the axis selection rotary switch (SW1) and auxiliary axis number setting switch (SW2), use insulated screw driver. Do not use a metal screw driver. Touching patterns on electronic boards, lead of electronic parts, etc. may cause an electric shock.

POINT

●Turning "ON (up)" all the control axis setting switches (SW2) enables an operation mode for manufacturer setting and displays "off". The mode is not available. Set the control axis setting switches (SW2) correctly according to this section.
●Cycling the main circuit power supply and control circuit power supply enables the setting of each switch.

The following explains the test operation select switch, the disabling control axis switch, auxiliary axis number setting switches, and the axis selection rotary switch.

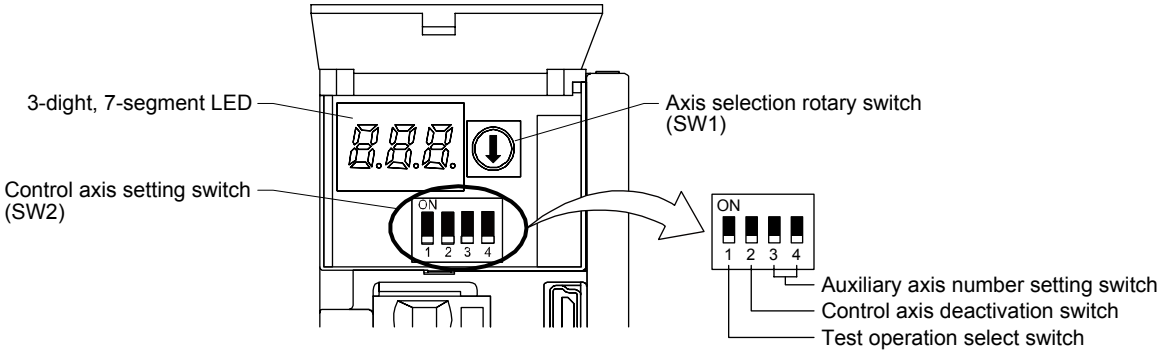

(1) Test operation select switch (SW2-1)
To use the test operation mode, turn "ON (up)" the switch. Turning "ON (up)" the switch enables the test operation mode. In the test operation mode, the functions such as JOG operation, positioning operation, and machine analyzer are available with MR Configurator2. Before turning "ON (up)" the test operation select switch, turn "OFF (down)" the disabling control axis switch.

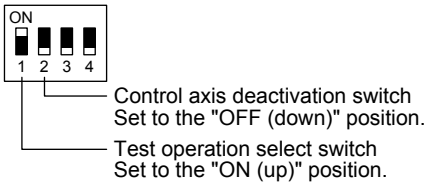

(2) Disabling control axis switch (SW2-2)
Turning "ON (up)" the disabling control axis switch disables the corresponding servo motor. The servo motor will be disabled-axis status and will not be recognized by the controller.

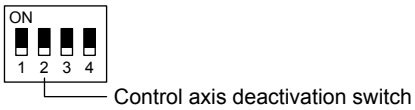

(3) Switches for setting control axis No.

POINT
●The control axis No. set to the auxiliary axis number setting switches (SW2-3 and SW2-4) and the axis selection rotary switch (SW1) should be the same as the one set to the servo system controller. The number of the axes you can set depends on the servo system controller. ●For setting the axis selection rotary switch, use a flat-blade screwdriver with the blade edge width of 2.1 mm to 2.3 mm and the blade edge thickness of 0.6 mm to 0.7 mm. ●When the test operation mode is selected with the test operation select switch (SW2-1), the SSCNET III/H communication for the servo amplifier in the test operation mode and the following servo amplifiers is blocked.

You can set the control axis No. between 1 and 64 by using auxiliary axis number setting switches with the axis selection rotary switch. (Refer to (3) (c) of this section.)
If the same numbers are set to different control axes in a single communication system, the system will not operate properly. The control axes may be set independently of the SSCNET III cable connection sequence. The following shows the description of each switch.

(a) Auxiliary axis number setting switches (SW2-3 and SW2-4)
Turning these switches "ON (up)" enables you to set the axis No. 17 or more.

(b) Axis selection rotary switch (SW1)
You can set the control axis No. between 1 and 64 by using auxiliary axis number setting switches with the axis selection rotary switch. (Refer to (3) (c) of this section.)

Axis selection rotary switch (SW1)

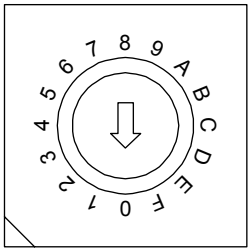

(c) Switch combination list for the control axis No. setting

The following lists show the setting combinations of the auxiliary axis number setting switches and the axis selection rotary switch.

Auxiliary axis number setting switch	Axis selection rotary switch	Control axis No.
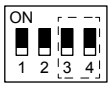	0	1
	1	2
	2	3
	3	4
	4	5
	5	6
	6	7
	7	8
	8	9
	9	10
	A	11
	B	12
	C	13
	D	14
	E	15
	F	16

Auxiliary axis number setting switch	Axis selection rotary switch	Control axis No.
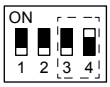	0	17
	1	18
	2	19
	3	20
	4	21
	5	22
	6	23
	7	24
	8	25
	9	26
	A	27
	B	28
	C	29
	D	30
	E	31
	F	32

Auxiliary axis number setting switch	Axis selection rotary switch	Control axis No.
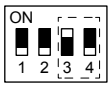	0	33
	1	34
	2	35
	3	36
	4	37
	5	38
	6	39
	7	40
	8	41
	9	42
	A	43
	B	44
	C	45
	D	46
	E	47
	F	48

Auxiliary axis number setting switch	Axis selection rotary switch	Control axis No.
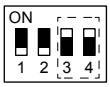	0	49
	1	50
	2	51
	3	52
	4	53
	5	54
	6	55
	7	56
	8	57
	9	58
	A	59
	B	60
	C	61
	D	62
	E	63
	F	64

4.3.2 Scrolling display

(1) Normal display

When there is no alarm, the axis No. and blank are displayed in rotation.

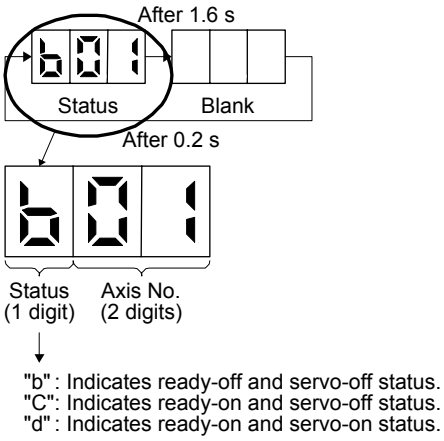

(2) Alarm display

When an alarm occurs, the alarm number (two digits) and the alarm detail (one digit) are displayed following the status display. For example, the following shows when [AL. 32 Overcurrent] is occurring.

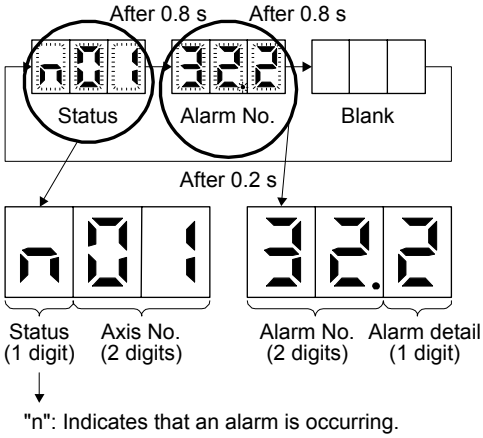

4.3.3 Status display of an axis

(1) Display sequence

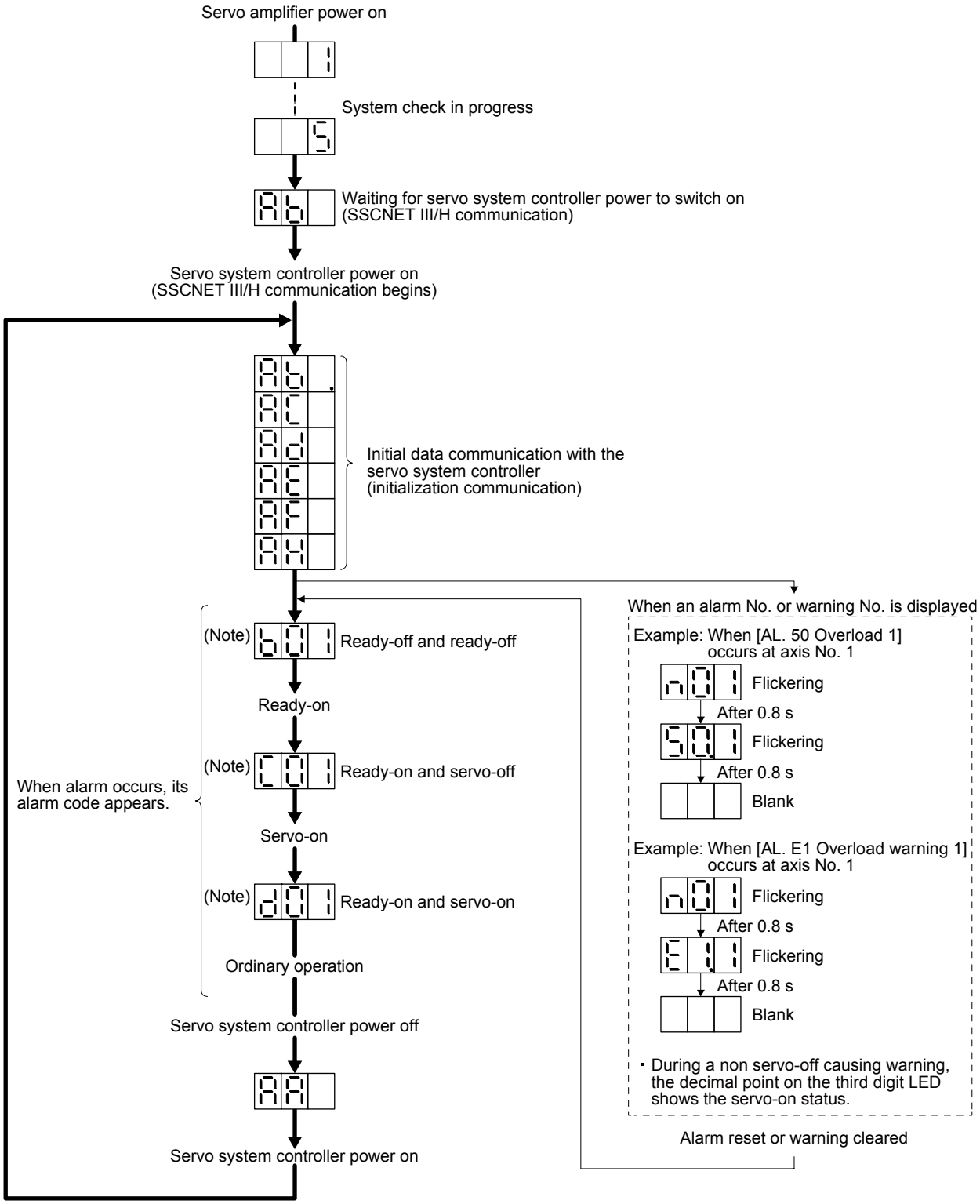

Note. 01 02 ··· 64 The segment of the last 2 digits shows the axis number.

Axis No. 1 Axis No. 2 Axis No. 64

(2) Indication list

Indication	Status	Description
1 ⋮ 5	Initializing	System check in progress
Ab	Initializing	・Power of the servo amplifier was switched on at the condition that the power of the servo system controller is off. ・The control axis No. set to the auxiliary axis number setting switches (SW2-3 and SW2-4) and the axis selection rotary switch (SW1) do not match the one set to the servo system controller. ・A servo amplifier malfunctioned, or communication error occured with the servo system controller or the previous axis servo amplifier. In this case, the indication changes as follows: "Ab", "AC", "Ad", and "Ab" ・The servo system controller is malfunctioning.
Ab.	Initializing	During initial setting for communication specifications
AC	Initializing	Initial setting for communication specifications completed, and then it synchronized with servo system controller.
Ad	Initializing	During initial parameter setting communication with servo system controller
AE	Initializing	During the servo motor/encoder information and telecommunication with servo system controller
AF	Initializing	During initial signal data communication with servo system controller
AH	Initializing completion	The process for initial data communication with the servo system controller is completed.
AA	Initializing standby	The power supply of servo system controller is turned off during the power supply of servo amplifier is on.
(Note 1) b##	Ready-off	The ready-off signal from the servo system controller was received.
(Note 1) d##	Servo-on	The ready-off signal from the servo system controller was received.
(Note 1) C##	Servo-off	The ready-off signal from the servo system controller was received.
(Note 2) ***	Alarm and warning	The alarm No. and the warning No. that occurred is displayed. (Refer to section 8. (Note 4))
888	CPU error	CPU watchdog error has occurred.
(Note 1) b##. d##. C##.	(Note 3) Test operation mode	Motor-less operation

Note 1. The meanings of ## are listed below.

##	Description
01	Axis No. 1
~	~
64	Axis No. 64

2. ** indicates the alarm No. and the warning No.
3. Requires the MR Configurator2.
4. Only a list of alarms and warnings is listed in chapter 8. Refer to "MELSERVO-J4 Servo Amplifier Instruction Manual (Troubleshooting)" for details of alarms and warnings.

4.4 Test operation

Before starting actual operation, perform test operation to make sure that the machine operates normally. Refer to section 4.2 for the power on and off methods of the servo amplifier.

> **POINT**
> ●If necessary, verify controller program by using motor-less operation. Refer to section 4.5.2 for the motor-less operation.

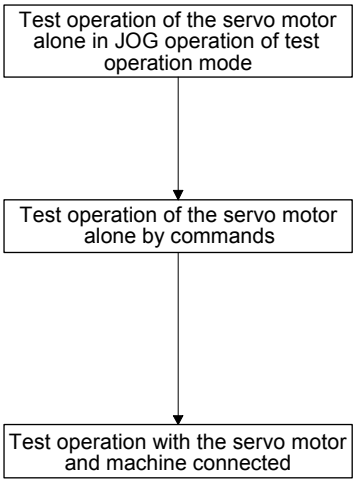

In this step, confirm that the servo amplifier and servo motor operate normally. With the servo motor disconnected from the machine, use the test operation mode and check whether the servo motor rotates correctly. Refer to section 4.5 for the test operation mode.

In this step, confirm that the servo motor rotates correctly under the commands from the controller.
Give a low speed command at first and check the rotation direction, etc. of the servo motor. If the machine does not operate in the intended direction, check the input signal.

In this step, connect the servo motor with the machine and confirm that the machine operates normally under the commands from the controller.
Give a low speed command at first and check the operation direction, etc. of the machine. If the machine does not operate in the intended direction, check the input signal.
Check any problems with the servo motor speed, load ratio, and other status display items with MR Configurator2.
Then, check automatic operation with the program of the controller.

4.5 Test operation mode

> **⚠CAUTION**
> ●The test operation mode is designed for checking servo operation. It is not for checking machine operation. Do not use this mode with the machine. Always use the servo motor alone.
> ●If the servo motor operates abnormally, use EM2 (Forced stop 2) to stop it.

> **POINT**
> ●The content described in this section indicates that the servo amplifier and a personal computer are directly connected.

By using a personal computer and MR Configurator2, you can execute jog operation, positioning operation, DO forced output program operation without connecting the servo system controller.

4.5.1 Test operation mode in MR Configurator2

POINT
●When the test operation mode is selected with the test operation select switch (SW2-1), the SSCNET III/H communication for the servo amplifier in the test operation mode and the following servo amplifiers is blocked.

(1) Test operation mode

(a) Jog operation

Jog operation can be performed without using the servo system controller. Use this operation with the forced stop reset. This operation may be used independently of whether the servo is on or off and whether the servo system controller is connected or not.
Exercise control on the jog operation screen of MR Configurator2.

1) Operation pattern

Item	initial value	Setting range
Speed [r/min]	200	0 to max. speed
Acceleration/deceleration time constant [ms]	1000	0 to 50000

2) Operation method

・When the check box of "Rotation only while the CCW or CW button is being pushed." is checked.

Operation	Screen control
Forward rotation start	Keep pressing the "Forward" button.
Reverse rotation start	Keep pressing the "Reverse" button.
Stop	Release the "Forward" or "Reverse" button.
Forced stop	Click the "Forced stop" button.

・When the check box of "Rotation only while the CCW or CW button is being pushed." is not checked.

Operation	Screen control
Forward rotation start	Click the "Forward" button.
Reverse rotation start	Click the "Reverse" button.
Stop	Click the "Stop" button.
Forced stop	Click the "Forced stop" button.

(b) Positioning operation

Positioning operation can be performed without using the servo system controller. Use this operation with the forced stop reset. This operation may be used independently of whether the servo is on or off and whether the servo system controller is connected or not.

Exercise control on the positioning operation screen of MR Configurator2.

1) Operation pattern

Item	initial value	Setting range
Travel distance [pulse]	4000	0 to 99999999
Speed [r/min]	200	0 to max. speed
Acceleration/deceleration time constant [ms]	1000	0 to 50000
Repeat pattern	Fwd. rot. (CCW) to rev. rot. (CW)	Fwd. rot. (CCW) to rev. rot. (CW) Fwd. rot. (CCW) to fwd. rot. (CCW) Rev. rot. (CW) to fwd. rot. (CCW) Rev. rot. (CW) to rev. rot. (CW)
Dwell time [s]	2.0	0.1 to 50.0
Number of repeats [time]	1	1 to 9999

2) Operation method

Operation	Screen control
Forward rotation start	Click the "Forward" button.
Reverse rotation start	Click the "Reverse" button.
Pause	Click the "Pause" button.
Stop	Click the "Stop" button.
Forced stop	Click the "Forced stop" button.

(c) Program operation

Positioning operation can be performed in two or more operation patterns combined, without using the servo system controller. Use this operation with the forced stop reset. This operation may be used independently of whether the servo is on or off and whether the servo system controller is connected or not.

Exercise control on the program operation screen of MR Configurator2. For full information, refer to the MR Configurator2 Installation Guide.

Operation	Screen control
Start	Click the "Start" button.
Pause	Click the "Pause" button.
Stop	Click the "Stop" button.
Forced stop	Click the "Forced stop" button.

(d) Output signal (DO) forced output

Output signals can be switched on/off forcibly independently of the servo status. Use this function for output signal wiring check, etc. Exercise control on the DO forced output screen of MR Configurator2.

(2) Operation procedure

1) Turn off the power.

2) Turn "ON (up)" SW2-1.

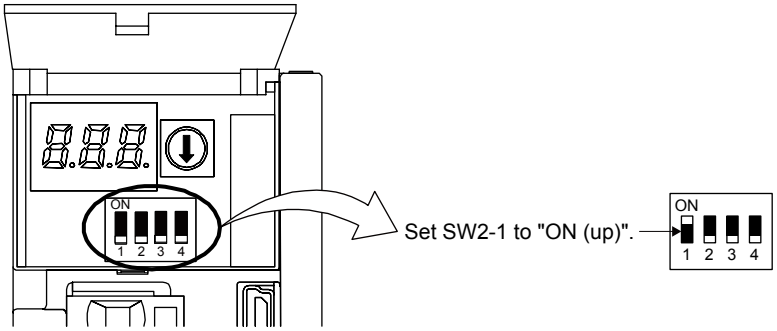

Turning "ON (up)" SW2-1 during power-on will not start the test operation mode.

3) Turn on the servo amplifier.
When initialization is completed, the decimal point on the first digit will flicker.

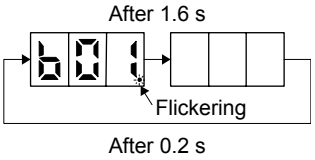

When an alarm or warning also occurs during the test operation, the decimal point on the first digit will flicker as follows.

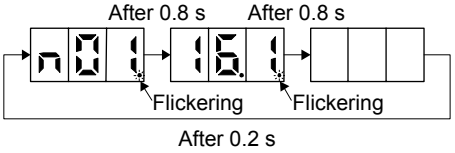

4) Start operation with the personal computer.

4.5.2 Motor-less operation in controller

POINT
●Use motor-less operation which is available by making the servo system controller parameter setting. ●Connect the servo system controller to the servo amplifier before the motor-less operation. ●The motor-less operation using a controller is available with rotary servo motors only. It will be available with linear servo motors and direct drive motors in the future.

(1) Motor-less operation

Without connecting the servo motor to the servo amplifier, output signals or status displays can be provided in response to the servo system controller commands as if the servo motor is actually running. This operation may be used to check the servo system controller sequence. Use this operation with the forced stop reset. Use this operation with the servo amplifier connected to the servo system controller. To stop the motor-less operation, set the motor-less operation selection to "Disable" in the servo parameter setting of the servo system controller. When the power supply is turned on next time, motor-less operation will be disabled.

(a) Load conditions

Load item	Condition
Load torque	0
Load to motor inertia ratio	Same as the moment of inertia of the servo motor

(b) Alarms

The following alarms and warning do not occur. However, the other alarms and warnings occur as when the servo motor is connected.

Alarm and warning	Rotary servo motor	Linear servo motor	Direct drive motor	(Note) Rotary servo motor in fully closed loop system
[AL. 16 Encoder initial communication error 1]	○	○	○	○
[AL. 1E Encoder initial communication error 2]	○	○	○	○
[AL. 1F Encoder initial communication error 3]	○	○	○	○
[AL. 20 Encoder normal communication error 1]	○	○	○	○
[AL. 21 Encoder normal communication error 2]	○	○	○	○
[AL. 25 Absolute position erased]	○		○	○
[AL. 28 Linear encoder error 2]		○		○
[AL. 2A Linear encoder error 1]		○		○
[AL. 2B Encoder counter error]			○	
[AL. 92 Battery cable disconnection warning]	○		○	○
[AL. 9F Battery warning]	○		○	○
[AL. 70 Load-side encoder error 1]				○
[AL. 71 Load-side encoder error 2]				○

Note. The fully closed loop system is available for the MR-J4-_B_(-RJ) servo amplifiers of which software version is A3 or above. Check the software version using MR Configurator2.

(2) Operation procedure

1) Set the servo amplifier to the servo-off status.

2) Set [Pr. PC05] to "_ _ _ 1", turn "OFF (down: normal condition side)" the test operation mode switch (SW2-1), and then turn on the power supply.

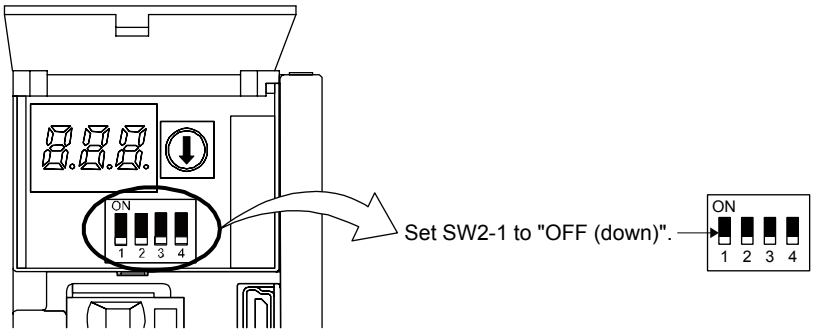

3) Start the motor-less operation with the servo system controller.
The display shows the following screen.

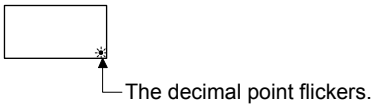

MEMO

5. PARAMETERS

⚠CAUTION	●Never make a drastic adjustment or change to the parameter values as doing so will make the operation unstable. ●If fixed values are written in the digits of a parameter, do not change these values. ●Do not change parameters for manufacturer setting. ●Do not set values other than described values to each parameter.

POINT

●When you connect the amplifier to a servo system controller, servo parameter values of the servo system controller will be written to each parameter.
●Setting may not be made to some parameters and their ranges depending on the servo system controller model, servo amplifier software version, and MR Configurator2 software version. For details, refer to the servo system controller user's manual.

5.1 Parameter list

POINT

●The parameter whose symbol is preceded by * is enabled with the following conditions:
*: After setting the parameter, cycle the power or reset the controller.
**: After setting the parameter, cycle the power.
●Abbreviations of operation modes indicate the followings.
Standard: Standard (semi closed loop system) use of the rotary servo motor
Full.: Fully closed loop system use of the rotary servo motor
Lin.: Linear servo motor use
D.D.: Direct drive (D.D.) motor use

5.1.1 Basic setting parameters ([Pr. PA_ _])

No.	Symbol	Name	Initial value	Unit	Operation mode			
					Standard	Full.	Lin.	D.D.
PA01	**STY	Operation mode	1000h		○	○	○	○
PA02	**REG	Regenerative option	0000h		○	○	○	○
PA03	*ABS	Absolute position detection system	0000h		○	○	○	○
PA04	*AOP1	Function selection A-1	2000h		○	○	○	○
PA05		For manufacturer setting	10000					
PA06			1					
PA07			1					
PA08	ATU	Auto tuning mode	0001h		○	○	○	○
PA09	RSP	Auto tuning response	16		○	○	○	○
PA10	INP	In-position range	1600	[pulse]	○	○	○	○
PA11		For manufacturer setting	1000.0					
PA12			1000.0					
PA13			0000h					
PA14	*POL	Rotation direction selection/travel direction selection	0		○	○	○	○
PA15	*ENR	Encoder output pulses	4000	[pulse/rev]	○	○	○	○
PA16	*ENR2	Encoder output pulses 2	1		○	○	○	○
PA17	**MSR	Servo motor series setting	0000h				○	
PA18	**MTY	Servo motor type setting	0000h				○	
PA19	*BLK	Parameter writing inhibit	00ABh		○	○	○	○
PA20	*TDS	Tough drive setting	0000h		○	○	○	○
PA21	*AOP3	Function selection A-3	0001h		○	○	○	○
PA22	**PCS	Position control composition selection	0000h		○			
PA23	DRAT	Drive recorder arbitrary alarm trigger setting	0000h		○	○	○	○
PA24	AOP4	Function selection A-4	0000h		○	○	○	○
PA25	OTHOV	One-touch tuning - Overshoot permissible level	0	[%]	○	○	○	○
PA26	*AOP5	Function selection A-5	0000h		○	○	○	○
PA27		For manufacturer setting	0000h					
PA28			0000h					
PA29			0000h					
PA30			0000h					
PA31			0000h					
PA32			0000h					

5.1.2 Gain/filter setting parameters ([Pr. PB_ _])

No.	Symbol	Name	Initial value	Unit	Operation mode			
					Standard	Full.	Lin.	D.D.
PB01	FILT	Adaptive tuning mode (adaptive filter II)	0000h		○	○	○	○
PB02	VRFT	Vibration suppression control tuning mode (advanced vibration suppression control II)	0000h		○	○	○	○
PB03	TFBGN	Torque feedback loop gain	18000	[rad/s]	○	○	○	○
PB04	FFC	Feed forward gain	0	[%]	○	○	○	○
PB05		For manufacturer setting	500					
PB06	GD2	Load to motor inertia ratio/load to motor mass ratio	7.00	[Multiplier]	○	○	○	○
PB07	PG1	Model loop gain	15.0	[rad/s]	○	○	○	○
PB08	PG2	Position loop gain	37.0	[rad/s]	○	○	○	○
PB09	VG2	Speed loop gain	823	[rad/s]	○	○	○	○
PB10	VIC	Speed integral compensation	33.7	[ms]	○	○	○	○
PB11	VDC	Speed differential compensation	980		○	○	○	○
PB12	OVA	Overshoot amount compensation	0	[%]	○	○	○	○
PB13	NH1	Machine resonance suppression filter 1	4500	[Hz]	○	○	○	○
PB14	NHQ1	Notch shape selection 1	0000h		○	○	○	○
PB15	NH2	Machine resonance suppression filter 2	4500	[Hz]	○	○	○	○
PB16	NHQ2	Notch shape selection 2	0000h		○	○	○	○
PB17	NHF	Shaft resonance suppression filter	0000h		○	○	○	○
PB18	LPF	Low-pass filter setting	3141	[rad/s]	○	○	○	○
PB19	VRF11	Vibration suppression control 1 - Vibration frequency	100.0	[Hz]	○	○	○	○
PB20	VRF12	Vibration suppression control 1 - Resonance frequency	100.0	[Hz]	○	○	○	○
PB21	VRF13	Vibration suppression control 1 - Vibration frequency damping	0.00		○	○	○	○
PB22	VRF14	Vibration suppression control 1 - Resonance frequency damping	0.00		○	○	○	○
PB23	VFBF	Low-pass filter selection	0000h		○	○	○	○
PB24	*MVS	Slight vibration suppression control	0000h		○	○	○	○
PB25		For manufacturer setting	0000h					
PB26	*CDP	Gain switching function	0000h		○	○	○	○
PB27	CDL	Gain switching condition	10	[kpulse/s]/ [pulse]/ [r/min]	○	○	○	○
PB28	CDT	Gain switching time constant	1	[ms]	○	○	○	○
PB29	GD2B	Load to motor inertia ratio/load to motor mass ratio after gain switching	7.00	[Multiplier]	○	○	○	○
PB30	PG2B	Position loop gain after gain switching	0.0	[rad/s]	○	○	○	○
PB31	VG2B	Speed loop gain after gain switching	0	[rad/s]	○	○	○	○
PB32	VICB	Speed integral compensation after gain switching	0.0	[ms]	○	○	○	○
PB33	VRF11B	Vibration suppression control 1 - Vibration frequency after gain switching	0.0	[Hz]	○	○	○	○
PB34	VRF12B	Vibration suppression control 1 - Resonance frequency after gain switching	0.0	[Hz]	○	○	○	○
PB35	VRF13B	Vibration suppression control 1 - Vibration frequency damping after gain switching	0.00		○	○	○	○
PB36	VRF14B	Vibration suppression control 1 - Resonance frequency damping after gain switching	0.00		○	○	○	○
PB37		For manufacturer setting	1600					
PB38			0.00					
PB39			0.00					
PB40			0.00					
PB41			0					
PB42			0					
PB43			0000h					
PB44			0.00					
PB45	CNHF	Command notch filter	0000h		○	○	○	○

No.	Symbol	Name	Initial value	Unit	Operation mode			
					Standard	Full.	Lin.	D.D.
PB46	NH3	Machine resonance suppression filter 3	4500	[Hz]	○	○	○	○
PB47	NHQ3	Notch shape selection 3	0000h		○	○	○	○
PB48	NH4	Machine resonance suppression filter 4	4500	[Hz]	○	○	○	○
PB49	NHQ4	Notch shape selection 4	0000h		○	○	○	○
PB50	NH5	Machine resonance suppression filter 5	4500	[Hz]	○	○	○	○
PB51	NHQ5	Notch shape selection 5	0000h		○	○	○	○
PB52	VRF21	Vibration suppression control 2 - Vibration frequency	100.0	[Hz]	○	○	○	○
PB53	VRF22	Vibration suppression control 2 - Resonance frequency	100.0	[Hz]	○	○	○	○
PB54	VRF23	Vibration suppression control 2 - Vibration frequency damping	0.00		○	○	○	○
PB55	VRF24	Vibration suppression control 2 - Resonance frequency damping	0.00		○	○	○	○
PB56	VRF21B	Vibration suppression control 2 - Vibration frequency after gain switching	0.0	[Hz]	○	○	○	○
PB57	VRF22B	Vibration suppression control 2 - Resonance frequency after gain switching	0.0	[Hz]	○	○	○	○
PB58	VRF23B	Vibration suppression control 2 - Vibration frequency damping after gain switching	0.00		○	○	○	○
PB59	VRF24B	Vibration suppression control 2 - Resonance frequency damping after gain switching	0.00		○	○	○	○
PB60	PG1B	Model loop gain after gain switching	0.0	[rad/s]	○	○	○	○
PB61		For manufacturer setting	0.0					
PB62			0000h					
PB63			0000h					
PB64			0000h					

5.1.3 Extension setting parameters ([Pr. PC_ _])

No.	Symbol	Name	Initial value	Unit	Operation mode			
					Standard	Full.	Lin.	D.D.
PC01	ERZ	Error excessive alarm level	0	[rev]/ [mm]	○	○	○	○
PC02	MBR	Electromagnetic brake sequence output	0	[ms]	○	○	○	○
PC03	*ENRS	Encoder output pulse selection	0000h		○	○	○	○
PC04	**COP1	Function selection C-1	0000h		○	○	○	○
PC05	**COP2	Function selection C-2	0000h		○			
PC06	*COP3	Function selection C-3	0000h		○	○	○	○
PC07	ZSP	Zero speed	50	[r/min]/ [mm/s]	○	○	○	○
PC08	OSL	Overspeed alarm detection level	0	[r/min]/ [mm/s]	○	○	○	○
PC09	MOD1	Analog monitor 1 output	0000h		○	○	○	○
PC10	MOD2	Analog monitor 2 output	0001h		○	○	○	○
PC11	MO1	Analog monitor 1 offset	0	[mV]	○	○	○	○
PC12	MO2	Analog monitor 2 offset	0	[mV]	○	○	○	○
PC13	MOSDL	Analog monitor - Feedback position output standard data - Low	0	[pulse]	○	○	○	○
PC14	MOSDH	Analog monitor - Feedback position output standard data - High	0	[10000pulses]	○	○	○	○
PC15		For manufacturer setting	0					
PC16			0000h					
PC17	**COP4	Function selection C-4	0000h		○	○	○	○
PC18	*COP5	Function selection C-5	0000h		○	○	○	○
PC19		For manufacturer setting	0000h					
PC20	*COP7	Function selection C-7	0000h		○	○	○	○

No.	Symbol	Name	Initial value	Unit	Operation mode			
					Standard	Full.	Lin.	D.D.
PC21	*BPS	Alarm history clear	0000h		○	○	○	○
PC22		For manufacturer setting	0					
PC23			0000h					
PC24	RSBR	Forced stop deceleration time constant	100	[ms]	○	○	○	○
PC25		For manufacturer setting	0					
PC26	**COP8	Function selection C-8	0000h		○ (Note)	○	○	○
PC27	**COP9	Function selection C-9	0000h		○ (Note)	○	○	
PC28		For manufacturer setting	0000h					
PC29	*COPB	Function selection C-B	0000h		○		○	○
PC30		For manufacturer setting	0					
PC31	RSUP1	Vertical axis freefall prevention compensation amount	0	[0.0001rev]/ [0.01mm]	○	○	○	○
PC32		For manufacturer setting	0000h					
PC33			0					
PC34			100					
PC35			0000h					
PC36			0000h					
PC37			0000h					
PC38			0000h					
PC39			0000h					
PC40			0000h					
PC41			0000h					
PC42			0000h					
PC43			0000h					
PC44			0000h					
PC45			0000h					
PC46			0000h					
PC47			0000h					
PC48			0000h					
PC49			0000h					
PC50			0000h					
PC51			0000h					
PC52			0000h					
PC53			0000h					
PC54			0000h					
PC55			0000h					
PC56			0000h					
PC57			0000h					
PC58			0000h					
PC59			0000h					
PC60			0000h					
PC61			0000h					
PC62			0000h					
PC63			0000h					
PC64			0000h					

Note. It is available when the scale measurement function is enabled ([Pr. PA22] is "1 _ _ _" or "2 _ _ _").

5.1.4 I/O setting parameters ([Pr. PD_ _])

No.	Symbol	Name	Initial value	Unit	Operation mode			
					Standard	Full.	Lin.	D.D.
PD01		For manufacturer setting	0000h					
PD02	*DIA2	Input signal automatic on selection 2	0000h		○	○	○	○
PD03		For manufacturer setting	0020h					
PD04			0021h					
PD05			0022h					
PD06			0000h					
PD07	*DO1	Output device selection 1	0005h		○	○	○	○
PD08	*DO2	Output device selection 2	0004h		○	○	○	○
PD09	*DO3	Output device selection 3	0003h		○	○	○	○
PD10		For manufacturer setting	0000h					
PD11	*DIF	Input filter setting (Note)	0004h	[ms]	○	○	○	○
PD12	*DOP1	Function selection D-1	0000h		○	○	○	○
PD13		For manufacturer setting	0000h					
PD14	*DOP3	Function selection D-3	0000h		○	○	○	○
PD15	*IDCS	Driver communication setting	0000h		○	○		
PD16	*MD1	Driver communication setting - Master - Transmit data selection 1	0000h		○	○		
PD17	*MD2	Driver communication setting - Master - Transmit data selection 2	0000h		○	○		
PD18		For manufacturer setting	0000h					
PD19			0000h					
PD20	*SLA1	Driver communication setting - Slave - Master axis No. selection 1	0		○			
PD21		For manufacturer setting	0					
PD22			0					
PD23			0					
PD24			0000h					
PD25			0000h					
PD26			0000h					
PD27			0000h					
PD28			0000h					
PD29			0000h					
PD30	TLC	Master-slave operation - Torque command coefficient on slave	0		○			
PD31	VLC	Master-slave operation - Speed limit coefficient on slave	0		○			
PD32	VLL	Master-slave operation - Speed limit adjusted value on slave	0	[r/min]	○			
PD33		For manufacturer setting	0000h					
PD34			0000h					
PD35			0000h					
PD36			0000h					
PD37			0000h					
PD38			0000h					
PD39			0000h					
PD40			0000h					
PD41			0000h					
PD42			0000h					
PD43			0000h					
PD44			0000h					
PD45			0000h					
PD46			0000h					
PD47			0000h					
PD48			0000h					

Note. Refer to the servo system controller instruction manual for the setting.

5.1.5 Extension setting 2 parameters ([Pr. PE_ _])

No.	Symbol	Name	Initial value	Unit	Operation mode			
					Standard	Full.	Lin.	D.D.
PE01	**FCT1	Fully closed loop function selection 1	0000h			○		
PE02		For manufacturer setting	0000h					
PE03	*FCT2	Fully closed loop function selection 2	0003h			○		
PE04	**FBN	Fully closed loop control - Feedback pulse electronic gear 1 - Numerator	1			○		
PE05	**FBD	Fully closed loop control - Feedback pulse electronic gear 1 - Denominator	1			○		
PE06	BC1	Fully closed loop control - Speed deviation error detection level	400	[r/min]		○		
PE07	BC2	Fully closed loop control - Position deviation error detection level	100	[kpulse]		○		
PE08	DUF	Fully closed loop dual feedback filter	10	[rad/s]		○		
PE09		For manufacturer setting	0000h					
PE10	FCT3	Fully closed loop function selection 3	0000h		○	○		
PE11		For manufacturer setting	0000h					
PE12			0000h					
PE13			0000h					
PE14			0111h					
PE15			20					
PE16			0000h					
PE17			0000h					
PE18			0000h					
PE19			0000h					
PE20			0000h					
PE21			0000h					
PE22			0000h					
PE23			0000h					
PE24			0000h					
PE25			0000h					
PE26			0000h					
PE27			0000h					
PE28			0000h					
PE29			0000h					
PE30			0000h					
PE31			0000h					
PE32			0000h					
PE33			0000h					
PE34	**FBN2	Fully closed loop control - Feedback pulse electronic gear 2 - Numerator	1			○		
PE35	**FBD2	Fully closed loop control - Feedback pulse electronic gear 2 - Denominator	1			○		
PE36		For manufacturer setting	0.0					
PE37			0.00					
PE38			0.00					
PE39			20					
PE40			0000h					
PE41	EOP3	Function selection E-3	0000h		○	○	○	○
PE42		For manufacturer setting	0					
PE43			0.0					
PE44			0000h					
PE45			0000h					
PE46			0000h					
PE47			0000h					
PE48			0000h					
PE49			0000h					
PE50			0000h					

No.	Symbol	Name	Initial value	Unit	Operation mode			
					Standard	Full.	Lin.	D.D.
PE51		For manufacturer setting	0000h					
PE52			0000h					
PE53			0000h					
PE54			0000h					
PE55			0000h					
PE56			0000h					
PE57			0000h					
PE58			0000h					
PE59			0000h					
PE60			0000h					
PE61			0.00					
PE62			0.00					
PE63			0.00					
PE64			0.00					

5.1.6 Extension setting 3 parameters ([Pr. PF_ _])

No.	Symbol	Name	Initial value	Unit	Operation mode			
					Standard	Full.	Lin.	D.D.
PF01		For manufacturer setting	0000h					
PF02			0000h					
PF03			0000h					
PF04			0					
PF05			0000h					
PF06	*FOP5	Function selection F-5	0000h		○	○	○	○
PF07		For manufacturer setting	0000h					
PF08			0000h					
PF09			0					
PF10			0					
PF11			0					
PF12	DBT	Electronic dynamic brake operating time	2000	[ms]	○	○	○	○
PF13		For manufacturer setting	0000h					
PF14			10					
PF15			0000h					
PF16			0000h					
PF17			0000h					
PF18			0000h					
PF19			0000h					
PF20			0000h					
PF21	DRT	Drive recorder switching time setting	0	[s]	○	○	○	○
PF22		For manufacturer setting	200					
PF23	OSCL1	Vibration tough drive - Oscillation detection level	50	[%]	○	○	○	○
PF24	*OSCL2	Vibration tough drive function selection	0000h		○	○	○	○
PF25	CVAT	SEMI-F47 function - Instantaneous power failure detection time	200	[ms]	○	○	○	○
PF26		For manufacturer setting	0					
PF27			0					
PF28			0					

No.	Symbol	Name	Initial value	Unit	Operation mode			
					Standard	Full.	Lin.	D.D.
PF29		For manufacturer setting	0000h					
PF30			0					
PF31	FRIC	Machine diagnosis function - Friction judgement speed	0	[r/min]/ [mm/s]	○	○	○	○
PF32		For manufacturer setting	50					
PF33			0000h					
PF34			0000h					
PF35			0000h					
PF36			0000h					
PF37			0000h					
PF38			0000h					
PF39			0000h					
PF40			0000h					
PF41			0000h					
PF42			0000h					
PF43			0000h					
PF44			0000h					
PF45			0000h					
PF46			0000h					
PF47			0000h					
PF48			0000h					

5.1.7 Linear servo motor/DD motor setting parameters ([Pr. PL_ _])

No.	Symbol	Name	Initial value	Unit	Operation mode			
					Standard	Full.	Lin.	D.D.
PL01	**LIT1	Linear servo motor/DD motor function selection 1	0301h				○	○
PL02	**LIM	Linear encoder resolution - Numerator	1000	[μm]			○	
PL03	**LID	Linear encoder resolution - Denominator	1000	[μm]			○	
PL04	*LIT2	Linear servo motor/DD motor function selection 2	0003h				○	○
PL05	LB1	Position deviation error detection level	0	[mm]/ [0.01rev]			○	○
PL06	LB2	Speed deviation error detection level	0	[r/min]/ [mm/s]			○	○
PL07	LB3	Torque/thrust deviation error detection level	100	[%]			○	○
PL08	*LIT3	Linear servo motor/DD motor function selection 3	0010h				○	○
PL09	LPWM	Magnetic pole detection voltage level	30	[%]			○	○
PL10		For manufacturer setting	5					
PL11			100					
PL12			500					
PL13			0000h					
PL14			0					
PL15			20					
PL16			0					
PL17	LTSTS	Magnetic pole detection - Minute position detection method - Function selection	0000h				○	○
PL18	IDLV	Magnetic pole detection - Minute position detection method - Identification signal amplitude	0	[%]			○	○

No.	Symbol	Name	Initial value	Unit	Operation mode			
					Standard	Full.	Lin.	D.D.
PL19		For manufacturer setting	0					
PL20			0					
PL21			0					
PL22			0					
PL23			0000h					
PL24			0					
PL25			0000h					
PL26			0000h					
PL27			0000h					
PL28			0000h					
PL29			0000h					
PL30			0000h					
PL31			0000h					
PL32			0000h					
PL33			0000h					
PL34			0000h					
PL35			0000h					
PL36			0000h					
PL37			0000h					
PL38			0000h					
PL39			0000h					
PL40			0000h					
PL41			0000h					
PL42			0000h					
PL43			0000h					
PL44			0000h					
PL45			0000h					
PL46			0000h					
PL47			0000h					
PL48			0000h					

5.2 Detailed list of parameters

POINT
●Set a value to each "x" in the "Setting digit" columns.

5.2.1 Basic setting parameters ([Pr. PA_ _])

<table>
<tr><th>No.</th><th>Symbol</th><th>Name and function</th><th>Initial value [unit]</th><th>Setting range</th></tr>
<tr><td>PA01</td><td>**STY</td><td>Operation mode
Select a operation mode.
<table>
<tr><th>Setting digit</th><th>Explanation</th><th>Initial value</th></tr>
<tr><td>_ _ _ x</td><td>For manufacturer setting</td><td>0h</td></tr>
<tr><td>_ _ x _</td><td>Operation mode selection
0: Standard control mode
1: Fully closed loop control mode
4. Linear servo motor control mode
6: DD motor control mode (Except 400 V class servo amplifiers)
Setting other than above will result in [AL. 37 Parameter error]. The fully closed loop system is available for the MR-J4-_B_(-RJ) servo amplifiers of which software version is A3 or above.</td><td>0h</td></tr>
<tr><td>_ x _ _</td><td>For manufacturer setting</td><td>0h</td></tr>
<tr><td>x _ _ _</td><td>Operation mode selection
To change this digit, use an application software "MR-J4(W)-B mode selection". When you change it without the application, [AL. 3E Operation mode error] will occur.
0: J3 compatibility mode
1: J4 mode</td><td>1h</td></tr>
</table></td><td colspan="2">Refer to Name and function column.</td></tr>
</table>

No.	Symbol	Name and function	Initial value [unit]	Setting range
PA02	**REG	Regenerative option Used to select the regenerative option. Incorrect setting may cause the regenerative option to burn. If a selected regenerative option is not for use with the servo amplifier, [AL. 37 Parameter error] occurs.	Refer to Name and function column.	

Setting digit	Explanation	Initial value
_ _ x x	Regenerative option selection 00: Regenerative option is not used. ・For servo amplifier of 100 W, regenerative resistor is not used. ・For servo amplifier of 0.2 kW to 7 kW, built-in regenerative resistor is used. ・Supplied regenerative resistors or regenerative option is used with the servo amplifier of 11 kW to 22 kW. 01: FR-RC-(H)/FR-CV-(H)/FR-BU2-(H) When you use FR-RC-(H), FR-CV-(H) or FR-BU2-(H), select "Mode 2 (_ _ _ 1)" of "Undervoltage alarm detection mode selection" in [Pr. PC20]. 02: MR-RB032 03: MR-RB12 04: MR-RB32 05: MR-RB30 06: MR-RB50 (Cooling fan is required.) 08: MR-RB31 09: MR-RB51 (Cooling fan is required.) 0B: MR-RB3N 0C: MR-RB5N (Cooling fan is required.) 80: MR-RB1H-4 81: MR-RB3M-4 (Cooling fan is required.) 82: MR-RB3G-4 (Cooling fan is required.) 83: MR-RB5G-4 (Cooling fan is required.) 84: MR-RB34-4 (Cooling fan is required.) 85: MR-RB54-4 (Cooling fan is required.) 91: MR-RB3U-4 (Cooling fan is required.) 92: MR-RB5U-4 (Cooling fan is required.) FA: When the supplied regenerative resistors or the regenerative option is cooled by the cooling fan to increase the ability with the servo amplifier of 11 kW to 22 kW.	00h
_ x _ _	For manufacturer setting	0h
x _ _ _		0h

No.	Symbol	Name and function	Initial value [unit]	Setting range
PA03	*ABS	Absolute position detection system Set this parameter when using the absolute position detection system. The parameter is not available in the speed control mode and torque control mode.	Refer to Name and function column.	

Setting digit	Explanation	Initial value
_ _ _ x	Absolute position detection system selection 0: Disabled (used in incremental system) 1: Enabled (used in absolute position detection system)	0h
_ _ x _	For manufacturer setting	0h
_ x _ _		0h
x _ _ _		0h

No.	Symbol	Name and function	Initial value [unit]	Setting range
PA04	*AOP1	Function selection A-1 This is used to select the forced stop input and forced stop deceleration function.	Refer to Name and function column.	

Setting digit	Explanation	Initial value
_ _ _ x	For manufacturer setting	0h
_ _ x _		0h
_ x _ _	Servo forced stop selection 0: Enabled (The forced stop input EM2 or EM1 is used.) 1: Disabled (The forced stop input EM2 and EM1 are not used.) Refer to table 5.1 for details.	0h
x _ _ _	Forced stop deceleration function selection 0: Forced stop deceleration function disabled (EM1) 2: Forced stop deceleration function enabled (EM2) Refer to table 5.1 for details.	2h

Table 5.1 Deceleration method

Setting value	EM2/EM1	Deceleration method	
		EM2 or EM1 is off	Alarm occurred
0 0 _ _	EM1	MBR (Electromagnetic brake interlock) turns off without the forced stop deceleration.	MBR (Electromagnetic brake interlock) turns off without the forced stop deceleration.
2 0 _ _	EM2	MBR (Electromagnetic brake interlock) turns off after the forced stop deceleration.	MBR (Electromagnetic brake interlock) turns off after the forced stop deceleration.
0 1 _ _	Not using EM2 or EM1		MBR (Electromagnetic brake interlock) turns off without the forced stop deceleration.
2 1 _ _	Not using EM2 or EM1		MBR (Electromagnetic brake interlock) turns off after the forced stop deceleration.

No.	Symbol	Name and function	Initial value [unit]	Setting range
PA08	ATU	Auto tuning mode Select the gain adjustment mode.	Refer to Name and function column.	

Setting digit	Explanation	Initial value
_ _ _ x	Gain adjustment mode selection 0: 2 gain adjustment mode 1 (interpolation mode) 1: Auto tuning mode 1 2: Auto tuning mode 2 3: Manual mode 4: 2 gain adjustment mode 2 Refer to table 5.2 for details.	1h
_ _ x _	For manufacturer setting	0h
_ x _ _		0h
x _ _ _		0h

Table 5.2 Gain adjustment mode selection

Setting value	Gain adjustment mode	Automatically adjusted parameter
_ _ _ 0	2 gain adjustment mode 1 (interpolation mode)	[Pr. PB06 Load to motor inertia ratio/load to motor mass ratio] [Pr. PB08 Position loop gain] [Pr. PB09 Speed loop gain] [Pr. PB10 Speed integral compensation]
_ _ _ 1	Auto tuning mode 1	[Pr. PB06 Load to motor inertia ratio/load to motor mass ratio] [Pr. PB07 Model loop gain] [Pr. PB08 Position loop gain] [Pr. PB09 Speed loop gain] [Pr. PB10 Speed integral compensation]
_ _ _ 2	Auto tuning mode 2	[Pr. PB07 Model loop gain] [Pr. PB08 Position loop gain] [Pr. PB09 Speed loop gain] [Pr. PB10 Speed integral compensation]
_ _ _ 3	Manual mode	
_ _ _ 4	2 gain adjustment mode 2	[Pr. PB08 Position loop gain] [Pr. PB09 Speed loop gain] [Pr. PB10 Speed integral compensation]

No.	Symbol	Name and function	Initial value [unit]	Setting range
PA09	RSP	Auto tuning response Set a response of the auto tuning.	16	1 to 40
PA10	INP	In-position range Set an in-position range per command pulse.	1600 [pulse]	0 to 65535

Setting value	Machine characteristic	
	Response	Guideline for machine resonance frequency [Hz]
1	Low response	2.7
2		3.6
3		4.9
4		6.6
5		10.0
6		11.3
7		12.7
8		14.3
9		16.1
10		18.1
11		20.4
12		23.0
13		25.9
14		29.2
15		32.9
16		37.0
17		41.7
18		47.0
19	Middle response	52.9
20		59.6

Setting value	Machine characteristic	
	Response	Guideline for machine resonance frequency [Hz]
21	Middle response	67.1
22		75.6
23		85.2
24		95.9
25		108.0
26		121.7
27		137.1
28		154.4
29		173.9
30		195.9
31		220.6
32		248.5
33		279.9
34		315.3
35		355.1
36		400.0
37		446.6
38		501.2
39	High response	571.5
40		642.7

<table>
<tr><th>No.</th><th>Symbol</th><th>Name and function</th><th>Initial value [unit]</th><th>Setting range</th></tr>
<tr><td>PA14</td><td>*POL</td><td>Rotation direction selection/travel direction selection
This is used to select a rotation direction or travel direction.
For the setting for the master-slave operation function, refer to section 17.2.

<table>
<tr><th rowspan="2">Setting value</th><th colspan="2">Servo motor rotation direction/linear servo motor travel direction</th></tr>
<tr><th>Positioning address increase</th><th>Positioning address decrease</th></tr>
<tr><td>0</td><td>CCW or positive direction</td><td>CW or negative direction</td></tr>
<tr><td>1</td><td>CW or negative direction</td><td>CCW or positive direction</td></tr>
</table>
The following shows the servo motor rotation directions.
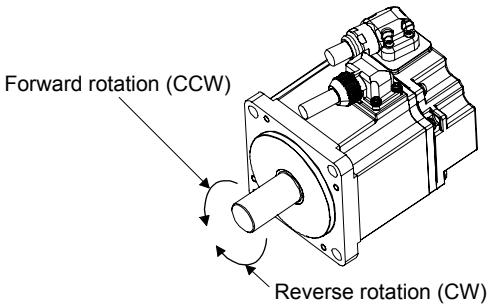

The positive/negative directions of the linear servo motor are as follows.
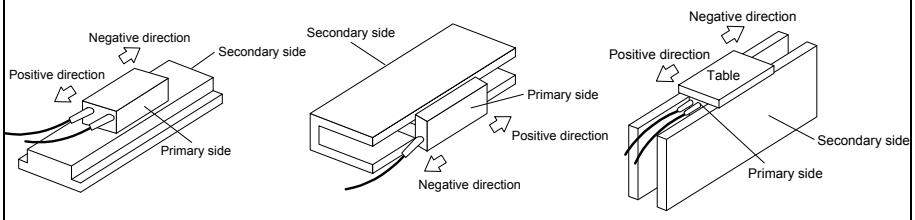

LM-H3/LM-F series LM-U2 series LM-K2 series</td><td>0</td><td>0 to 1</td></tr>
<tr><td>PA15</td><td>*ENR</td><td>Encoder output pulses
Set the encoder output pulses from the servo amplifier by using the number of output pulses per revolution, dividing ratio, or electronic gear ratio. (after multiplication by 4)
To set a numerator of the electronic gear, select "A-phase/B-phase pulse electronic gear setting (_ _ 3 _)" of "Encoder output pulse setting selection" in [Pr. PC03].
The maximum output frequency is 4.6 Mpulses/s. Set the parameter within this range.</td><td>4000 [pulse/ rev]</td><td>1 to 65535</td></tr>
<tr><td>PA16</td><td>*ENR2</td><td>Encoder output pulses 2
Set a denominator of the electronic gear for the A/B-phase pulse output. To set a denominator of the electronic gear, select "A-phase/B-phase pulse electronic gear setting (_ _ 3 _)" of "Encoder output pulse setting selection" in [Pr. PC03].</td><td>1</td><td>1 to 65535</td></tr>
</table>

No.	Symbol	Name and function	Initial value [unit]	Setting range
PA17	**MSR	Servo motor series setting When you use a linear servo motor, select its model from [Pr. PA17] and [Pr. PA18]. Set this and [Pr. PA18] at a time. Refer to the following table for settings.	0000h	Refer to Name and function column.

Linear servo motor series	Servo motor model (primary side)	Parameter	
		[Pr. PA17] setting	[Pr. PA18] setting
LM-H3	LM-H3P2A-07P-BSS0	00BBh	2101h
	LM-H3P3A-12P-CSS0		3101h
	LM-H3P3B-24P-CSS0		3201h
	LM-H3P3C-36P-CSS0		3301h
	LM-H3P3D-48P-CSS0		3401h
	LM-H3P7A-24P-ASS0		7101h
	LM-H3P7B-48P-ASS0		7201h
	LM-H3P7C-72P-ASS0		7301h
	LM-H3P7D-96P-ASS0		7401h
LM-U2	LM-U2PAB-05M-0SS0	00B4h	A201h
	LM-U2PAD-10M-0SS0		A401h
	LM-U2PAF-15M-0SS0		A601h
	LM-U2PBB-07M-1SS0		B201h
	LM-U2PBD-15M-1SS0		B401h
	LM-U2PBF-22M-1SS0		2601h
	LM-U2P2B-40M-2SS0		2201h
	LM-U2P2C-60M-2SS0		2301h
	LM-U2P2D-80M-2SS0		2401h
LM-F	LM-FP2B-06M-1SS0 (natural cooling)	00B2h	2201h
	LM-FP2D-12M-1SS0 (natural cooling)		2401h
	LM-FP2F-18M-1SS0 (natural cooling)		2601h
	LM-FP4B-12M-1SS0 (natural cooling)		4201h
	LM-FP4D-24M-1SS0 (natural cooling)		4401h
	LM-FP4F-36M-1SS0 (natural cooling)		4601h
	LM-FP4H-48M-1SS0 (natural cooling)		4801h
	LM-FP5H-60M-1SS0 (natural cooling)		5801h
	LM-FP2B-06M-1SS0 (liquid cooling)		2202h
	LM-FP2D-12M-1SS0 (liquid cooling)		2402h
	LM-FP2F-18M-1SS0 (liquid cooling)		2602h
	LM-FP4B-12M-1SS0 (liquid cooling)		4202h
	LM-FP4D-24M-1SS0 (liquid cooling)		4402h
	LM-FP4F-36M-1SS0 (liquid cooling)		4602h
	LM-FP4H-48M-1SS0 (liquid cooling)		4802h
	LM-FP5H-60M-1SS0 (liquid cooling)		5802h

<table>
<tr><th>No.</th><th>Symbol</th><th>Name and function</th><th>Initial value [unit]</th><th>Setting range</th></tr>
<tr><td>PA17</td><td>**MSR</td><td>
<table>
<tr><th>Linear servo motor series</th><th>Servo motor model (primary side)</th><th colspan="2">Parameter</th></tr>
<tr><td rowspan="7">LM-K2</td><td>LM-K2P1A-01M-2SS1</td><td rowspan="7">00B8h</td><td>1101h</td></tr>
<tr><td>LM-K2P1C-03M-2SS1</td><td>1301h</td></tr>
<tr><td>LM-K2P2A-02M-1SS1</td><td>2101h</td></tr>
<tr><td>LM-K2P2C-07M-1SS1</td><td>2301h</td></tr>
<tr><td>LM-K2P2E-12M-1SS1</td><td>2501h</td></tr>
<tr><td>LM-K2P3C-14M-1SS1</td><td>3301h</td></tr>
<tr><td>LM-K2P3E-24M-1SS1</td><td>3501h</td></tr>
</table>
</td><td>0000h</td><td>Refer to Name and function column.</td></tr>
<tr><td>PA18</td><td>**MTY</td><td>Servo motor type setting
When you use a linear servo motor, select its model from [Pr. PA17] and [Pr. PA18]. Set this and [Pr. PA17] at a time.
Refer to the table of [Pr. PA17] for settings.</td><td>0000h</td><td>Refer to Name and function column of [Pr. PA17].</td></tr>
<tr><td>PA19</td><td>*BLK</td><td>Parameter writing inhibit
Select a reference range and writing range of the parameter.
Refer to table 5.3 for settings.
Table 5.3 [Pr. PA19] setting value and reading/writing range
<table>
<tr><th>PA19</th><th>Setting operation</th><th>PA</th><th>PB</th><th>PC</th><th>PD</th><th>PE</th><th>PF</th><th>PL</th></tr>
<tr><td rowspan="2">Other than below</td><td>Reading</td><td>○</td><td></td><td></td><td></td><td></td><td></td><td></td></tr>
<tr><td>Writing</td><td>○</td><td></td><td></td><td></td><td></td><td></td><td></td></tr>
<tr><td rowspan="2">000Ah</td><td>Reading</td><td>Only 19</td><td></td><td></td><td></td><td></td><td></td><td></td></tr>
<tr><td>Writing</td><td>Only 19</td><td></td><td></td><td></td><td></td><td></td><td></td></tr>
<tr><td rowspan="2">000Bh</td><td>Reading</td><td>○</td><td>○</td><td>○</td><td></td><td></td><td></td><td></td></tr>
<tr><td>Writing</td><td>○</td><td>○</td><td>○</td><td></td><td></td><td></td><td></td></tr>
<tr><td rowspan="2">000Ch</td><td>Reading</td><td>○</td><td>○</td><td>○</td><td>○</td><td></td><td></td><td></td></tr>
<tr><td>Writing</td><td>○</td><td>○</td><td>○</td><td>○</td><td></td><td></td><td></td></tr>
<tr><td rowspan="2">000Fh</td><td>Reading</td><td>○</td><td>○</td><td>○</td><td>○</td><td>○</td><td></td><td>○</td></tr>
<tr><td>Writing</td><td>○</td><td>○</td><td>○</td><td>○</td><td>○</td><td></td><td>○</td></tr>
<tr><td rowspan="2">00AAh</td><td>Reading</td><td>○</td><td>○</td><td>○</td><td>○</td><td>○</td><td>○</td><td></td></tr>
<tr><td>Writing</td><td>○</td><td>○</td><td>○</td><td>○</td><td>○</td><td>○</td><td></td></tr>
<tr><td rowspan="2">00ABh (initial value)</td><td>Reading</td><td>○</td><td>○</td><td>○</td><td>○</td><td>○</td><td>○</td><td>○</td></tr>
<tr><td>Writing</td><td>○</td><td>○</td><td>○</td><td>○</td><td>○</td><td>○</td><td>○</td></tr>
<tr><td rowspan="2">100Bh</td><td>Reading</td><td>○</td><td></td><td></td><td></td><td></td><td></td><td></td></tr>
<tr><td>Writing</td><td>Only 19</td><td></td><td></td><td></td><td></td><td></td><td></td></tr>
<tr><td rowspan="2">100Ch</td><td>Reading</td><td>○</td><td>○</td><td>○</td><td>○</td><td></td><td></td><td></td></tr>
<tr><td>Writing</td><td>Only 19</td><td></td><td></td><td></td><td></td><td></td><td></td></tr>
<tr><td rowspan="2">100Fh</td><td>Reading</td><td>○</td><td>○</td><td>○</td><td>○</td><td>○</td><td></td><td>○</td></tr>
<tr><td>Writing</td><td>Only 19</td><td></td><td></td><td></td><td></td><td></td><td></td></tr>
<tr><td rowspan="2">10AAh</td><td>Reading</td><td>○</td><td>○</td><td>○</td><td>○</td><td>○</td><td>○</td><td></td></tr>
<tr><td>Writing</td><td>Only 19</td><td></td><td></td><td></td><td></td><td></td><td></td></tr>
<tr><td rowspan="2">10ABh</td><td>Reading</td><td>○</td><td>○</td><td>○</td><td>○</td><td>○</td><td>○</td><td>○</td></tr>
<tr><td>Writing</td><td>Only 19</td><td></td><td></td><td></td><td></td><td></td><td></td></tr>
</table>
</td><td>00ABh</td><td>Refer to Name and function column.</td></tr>
</table>

<table>
<tr><th>No.</th><th>Symbol</th><th>Name and function</th><th>Initial value [unit]</th><th>Setting range</th></tr>
<tr><td>PA20</td><td>*TDS</td><td>Tough drive setting
Alarms may not be avoided with the tough drive function depending on the situations of the power supply and load fluctuation.
You can assign MTTR (During tough drive) to pins CN3-9, CN3-13 and CN3-15 with [Pr. PD07] to [Pr. PD09].
<table>
<tr><th>Setting digit</th><th>Explanation</th><th>Initial value</th></tr>
<tr><td>_ _ _ x</td><td>For manufacturer setting</td><td>0h</td></tr>
<tr><td>_ _ x _</td><td>Vibration tough drive selection
0: Disabled
1: Enabled

Selecting "1" enables to suppress vibrations by automatically changing setting values of [Pr. PB13 Machine resonance suppression filter 1] and [Pr. PB15 Machine resonance suppression filter 2] in case that the vibration exceed the value of the oscillation level set in [Pr. PF23].
Refer to section 7.3 for details.</td><td>0h</td></tr>
<tr><td>_ x _ _</td><td>SEMI-F47 function selection
0: Disabled
1: Enabled

Selecting "1" enables to avoid occurring [AL. 10 Undervoltage] using the electrical energy charged in the capacitor in case that an instantaneous power failure occurs during operation. Set the time of until [AL. 10.1 Voltage drop in the control circuit power] occurs in [Pr. PF25 SEMI-F47 function - Instantaneous power failure detection time].</td><td>0h</td></tr>
<tr><td>x _ _ _</td><td>For manufacturer setting</td><td>0h</td></tr>
</table></td><td colspan="2">Refer to Name and function column.</td></tr>
<tr><td>PA21</td><td>*AOP3</td><td>Function selection A-3
<table>
<tr><th>Setting digit</th><th>Explanation</th><th>Initial value</th></tr>
<tr><td>_ _ _ x</td><td>One-touch tuning function selection
0: Disabled
1: Enabled

When the digit is "0", the one-touch tuning with MR Configurator2 will be disabled.</td><td>1h</td></tr>
<tr><td>_ _ x _</td><td rowspan="3">For manufacturer setting</td><td>0h</td></tr>
<tr><td>_ x _ _</td><td>0h</td></tr>
<tr><td>x _ _ _</td><td>0h</td></tr>
</table></td><td colspan="2">Refer to Name and function column.</td></tr>
</table>

<table>
<tr><th>No.</th><th>Symbol</th><th>Name and function</th><th>Initial value [unit]</th><th>Setting range</th></tr>
<tr><td>PA22</td><td>**PCS</td><td>Position control composition selection
<table>
<tr><th>Setting digit</th><th>Explanation</th><th>Initial value</th></tr>
<tr><td>_ _ _ x</td><td rowspan="3">For manufacturer setting</td><td>0h</td></tr>
<tr><td>_ _ x _</td><td>0h</td></tr>
<tr><td>_ x _ _</td><td>0h</td></tr>
<tr><td>x _ _ _</td><td>Scale measurement mode selection
0: Disabled
1: Used in absolute position detection system
2: Used in incremental system

The absolute position detection system cannot be used while an incremental type encoder is used. Enabling absolute position detection system will trigger [AL. 37 Parameter error].
Additionally, the setting is enabled only in the standard control mode. Setting other than "0" in other operation modes triggers [AL. 37 Parameter error].</td><td>0h</td></tr>
</table></td><td colspan="2">Refer to Name and function column.</td></tr>
<tr><td>PA23</td><td>DRAT</td><td>Drive recorder arbitrary alarm trigger setting
<table>
<tr><th>Setting digit</th><th>Explanation</th><th>Initial value</th></tr>
<tr><td>_ _ x x</td><td>Alarm detail No. setting
Set the digits when you execute the trigger with arbitrary alarm detail No. for the drive recorder function.
When these digits are "0 0", only the arbitrary alarm No. setting will be enabled.</td><td>00h</td></tr>
<tr><td>x x _ _</td><td>Alarm No. setting
Set the digits when you execute the trigger with arbitrary alarm No. for the drive recorder function.
When "0 0" are set, arbitrary alarm trigger of the drive recorder will be disabled.</td><td>00h</td></tr>
</table>
Setting example:
To activate the drive recorder when [AL. 50 Overload 1] occurs, set "5 0 0 0".
To activate the drive recorder when [AL. 50.3 Thermal overload error 4 during operation] occurs, set "5 0 0 3".</td><td colspan="2">Refer to Name and function column.</td></tr>
<tr><td>PA24</td><td>AOP4</td><td>Function selection A-4
<table>
<tr><th>Setting digit</th><th>Explanation</th><th>Initial value</th></tr>
<tr><td>_ _ _ x</td><td>Vibration suppression function selection
0: Standard mode
1: 3 inertia mode
2: Low response mode
When two low resonance frequencies are generated, select "3 inertia mode (_ _ _ 1)". When the load to motor inertia ratio exceeds the recommended load to motor inertia ratio, select "Low response mode (_ _ _ 2)".
When you select the standard mode or low response mode, "Vibration suppression control 2" is not available.
When you select the 3 inertia mode, the feed forward gain is not available.
Before changing the control mode with the controller during the 3 inertia mode or low response mode, stop the motor.</td><td>0h</td></tr>
<tr><td>_ _ x _</td><td rowspan="3">For manufacturer setting</td><td>0h</td></tr>
<tr><td>_ x _ _</td><td>0h</td></tr>
<tr><td>x _ _ _</td><td>0h</td></tr>
</table></td><td colspan="2">Refer to Name and function column.</td></tr>
</table>

<table>
<tr><th>No.</th><th>Symbol</th><th>Name and function</th><th>Initial value [unit]</th><th>Setting range</th></tr>
<tr><td>PA25</td><td>OTHOV</td><td>One-touch tuning - Overshoot permissible level
This is used to set a permissible value of overshoot amount with a percentage to in-position range.
However, setting "0" will be 50%.</td><td>0
[%]</td><td>0 to 100</td></tr>
<tr><td>PA26</td><td>*AOP</td><td>Function selection A-5
<table>
<tr><th>Setting digit</th><th>Explanation</th><th>Initial value</th></tr>
<tr><td>_ _ _ x</td><td>Torque limit function selection at instantaneous power failure (instantaneous power failure tough drive selection)
0: Disabled
1: Enabled
When an instantaneous power failure occurs during operation, you can save electric energy charged in the capacitor in the servo amplifier by limiting torque at acceleration. You can also delay the time until [AL. 10.2 Voltage drop in the main circuit power] occurs with instantaneous power failure tough drive function. Doing this will enable you to set a longer time in [Pr. PF25 SEMI-F47 function - Instantaneous power failure detection time].
To enable the torque limit function at instantaneous power failure, select "Enabled (_ 1 _ _)" of "SEMI-F47 function selection" in [Pr. PA20].
This parameter setting is used with servo amplifier with software version A6 or later.</td><td>0h</td></tr>
<tr><td>_ _ x _</td><td rowspan="3">For manufacturer setting</td><td>0h</td></tr>
<tr><td>_ x _ _</td><td>0h</td></tr>
<tr><td>x _ _ _</td><td>0h</td></tr>
</table></td><td colspan="2">Refer to Name and function column.</td></tr>
</table>

5.2.2 Gain/filter setting parameters ([Pr. PB_ _])

<table>
<tr><th>No.</th><th>Symbol</th><th>Name and function</th><th>Initial value [unit]</th><th>Setting range</th></tr>
<tr><td>PB01</td><td>FILT</td><td>Adaptive tuning mode (adaptive filter II)
Set the adaptive filter tuning.
<table>
<tr><th>Setting digit</th><th>Explanation</th><th>Initial value</th></tr>
<tr><td>_ _ _ x</td><td>Filter tuning mode selection
Select the adjustment mode of the machine resonance suppression filter 1. Refer to section 7.1.2 for details.
0: Disabled
1: Automatic setting
2: Manual setting</td><td>0h</td></tr>
<tr><td>_ _ x _</td><td rowspan="3">For manufacturer setting</td><td>0h</td></tr>
<tr><td>_ x _ _</td><td>0h</td></tr>
<tr><td>x _ _ _</td><td>0h</td></tr>
</table></td><td colspan="2">Refer to Name and function column.</td></tr>
<tr><td>PB02</td><td>VRFT</td><td>Vibration suppression control tuning mode (advanced vibration suppression control II)
This is used to set the vibration suppression control tuning. Refer to section 7.1.5 for details.
<table>
<tr><th>Setting digit</th><th>Explanation</th><th>Initial value</th></tr>
<tr><td>_ _ _ x</td><td>Vibration suppression control 1 tuning mode selection
Select the tuning mode of the vibration suppression control 1.
0: Disabled
1: Automatic setting
2: Manual setting</td><td>0h</td></tr>
<tr><td>_ _ x _</td><td>Vibration suppression control 2 tuning mode selection
Select the tuning mode of the vibration suppression control 2. To enable the digit, select "3 inertia mode (_ _ _ 1)" of "Vibration suppression mode selection" in [Pr. PA24 Function selection A-4].
0: Disabled
1: Automatic setting
2: Manual setting</td><td>0h</td></tr>
<tr><td>_ x _ _</td><td rowspan="2">For manufacturer setting</td><td>0h</td></tr>
<tr><td>x _ _ _</td><td>0h</td></tr>
</table></td><td colspan="2">Refer to Name and function column.</td></tr>
<tr><td>PB03</td><td>TFBGN</td><td>Torque feedback loop gain
This is used to set a torque feedback loop gain in the continuous operation to torque control mode.
Decreasing the setting value will also decrease a collision load during continuous operation to torque control mode.
Setting a value less than 6 rad/s will be 6 rad/s.</td><td>18000 [rad/s]</td><td>0 to 18000</td></tr>
<tr><td>PB04</td><td>FFC</td><td>Feed forward gain
Set the feed forward gain.
When the setting is 100%, the droop pulses during operation at constant speed are nearly zero. However, sudden acceleration/deceleration will increase the overshoot. As a guideline, when the feed forward gain setting is 100%, set 1 s or more as the acceleration time constant up to the rated speed.</td><td>0 [%]</td><td>0 to 100</td></tr>
</table>

<table>
<tr><th>No.</th><th>Symbol</th><th>Name and function</th><th>Initial value [unit]</th><th>Setting range</th></tr>
<tr><td>PB06</td><td>GD2</td><td>Load to motor inertia ratio/load to motor mass ratio
This is used to set the load to motor inertia ratio or load to motor mass ratio.
The setting of the parameter will be the automatic setting or manual setting depending on the [Pr. PA08] setting. Refer to the following table for details. When the parameter is automatic setting, the value will vary between 0.00 and 100.00.
<table>
<tr><th>Pr. PA08</th><th>This parameter</th></tr>
<tr><td>_ _ _ 0 (2 gain adjustment mode 1 (interpolation mode))</td><td rowspan="2">Automatic setting</td></tr>
<tr><td>_ _ _ 1 (Auto tuning mode 1)</td></tr>
<tr><td>_ _ _ 2 (Auto tuning mode 2)</td><td rowspan="3">Manual setting</td></tr>
<tr><td>_ _ _ 3 (Manual mode)</td></tr>
<tr><td>_ _ _ 4 (2 gain adjustment mode 2)</td></tr>
</table></td><td>7.00
Multiplier</td><td>0.00 to
300.00</td></tr>
<tr><td>PB07</td><td>PG1</td><td>Model loop gain
Set the response gain up to the target position.
Increasing the setting value will also increase the response level to the position command but will be liable to generate vibration and/or noise.
The setting of the parameter will be the automatic setting or manual setting depending on the [Pr. PA08] setting. Refer to the following table for details.
<table>
<tr><th>Pr. PA08</th><th>This parameter</th></tr>
<tr><td>_ _ _ 0 (2 gain adjustment mode 1 (interpolation mode))</td><td>Manual setting</td></tr>
<tr><td>_ _ _ 1 (Auto tuning mode 1)</td><td rowspan="2">Automatic setting</td></tr>
<tr><td>_ _ _ 2 (Auto tuning mode 2)</td></tr>
<tr><td>_ _ _ 3 (Manual mode)</td><td rowspan="2">Manual setting</td></tr>
<tr><td>_ _ _ 4 (2 gain adjustment mode 2)</td></tr>
</table></td><td>15.0
[rad/s]</td><td>1.0 to
2000.0</td></tr>
<tr><td>PB08</td><td>PG2</td><td>Position loop gain
This is used to set the gain of the position loop.
Set this parameter to increase the position response to level load disturbance.
Increasing the setting value will also increase the response level to the load disturbance but will be liable to generate vibration and/or noise.
The setting of the parameter will be the automatic setting or manual setting depending on the [Pr. PA08] setting. Refer to the following table for details.
<table>
<tr><th>Pr. PA08</th><th>This parameter</th></tr>
<tr><td>_ _ _ 0 (2 gain adjustment mode 1 (interpolation mode))</td><td rowspan="3">Automatic setting</td></tr>
<tr><td>_ _ _ 1 (Auto tuning mode 1)</td></tr>
<tr><td>_ _ _ 2 (Auto tuning mode 2)</td></tr>
<tr><td>_ _ _ 3 (Manual mode)</td><td>Manual setting</td></tr>
<tr><td>_ _ _ 4 (2 gain adjustment mode 2)</td><td>Automatic setting</td></tr>
</table></td><td>37.0
[rad/s]</td><td>1.0 to
2000.0</td></tr>
<tr><td>PB09</td><td>VG2</td><td>Speed loop gain
This is used to set the gain of the speed loop.
Set this parameter when vibration occurs on machines of low rigidity or large backlash.
Increasing the setting value will also increase the response level but will be liable to generate vibration and/or noise.
The setting of the parameter will be the automatic setting or manual setting depending on the [Pr. PA08] setting. Refer to the table of [Pr. PB08] for details.</td><td>823
[rad/s]</td><td>20 to
65535</td></tr>
<tr><td>PB10</td><td>VIC</td><td>Speed integral compensation
This is used to set the integral time constant of the speed loop.
Decreasing the setting value will increase the response level but will be liable to generate vibration and/or noise.
The setting of the parameter will be the automatic setting or manual setting depending on the [Pr. PA08] setting. Refer to the table of [Pr. PB08] for details.</td><td>33.7
[ms]</td><td>0.1 to
1000.0</td></tr>
</table>

<table>
<tr><th>No.</th><th>Symbol</th><th>Name and function</th><th>Initial value [unit]</th><th>Setting range</th></tr>
<tr><td>PB11</td><td>VDC</td><td>Speed differential compensation
This is used to set the differential compensation.
To enable the parameter, select "Continuous PID control enabled (_ _ 3 _)" of "PI-PID switching control selection" in [Pr. PB24].</td><td>980</td><td>0 to 1000</td></tr>
<tr><td>PB12</td><td>OVA</td><td>Overshoot amount compensation
This is used to set a viscous friction torque or thrust to rated torque in percentage unit at servo motor rated speed or linear servo motor rated speed.
When the response level is low or when the torque/thrust is limited, the efficiency of the parameter may be lower.</td><td>0
[%]</td><td>0 to 100</td></tr>
<tr><td>PB13</td><td>NH1</td><td>Machine resonance suppression filter 1
Set the notch frequency of the machine resonance suppression filter 1.
When you select "Automatic setting (_ _ _ 1)" of "Filter tuning mode selection" in [Pr. PB01], this parameter will be adjusted automatically.
When you select "Manual setting (_ _ _ 2)" of "Filter tuning mode selection" in [Pr. PB01], the setting value will be enabled.</td><td>4500
[Hz]</td><td>10
to
4500</td></tr>
<tr><td>PB14</td><td>NHQ1</td><td>Notch shape selection 1
Set the shape of the machine resonance suppression filter 1.
When you select "Automatic setting (_ _ _ 1)" of "Filter tuning mode selection" in [Pr. PB01], this parameter will be adjusted automatically.
Set manually for the manual setting.
<table>
<tr><th>Setting digit</th><th>Explanation</th><th>Initial value</th></tr>
<tr><td>_ _ _ x</td><td>For manufacturer setting</td><td>0h</td></tr>
<tr><td>_ _ x _</td><td>Notch depth selection
0: -40 dB
1: -14 dB
2: -8 dB
3: -4 dB</td><td>0h</td></tr>
<tr><td>_ x _ _</td><td>Notch width selection
0: α = 2
1: α = 3
2: α = 4
3: α = 5</td><td>0h</td></tr>
<tr><td>x _ _ _</td><td>For manufacturer setting</td><td>0h</td></tr>
</table></td><td colspan="2">Refer to Name and function column.</td></tr>
<tr><td>PB15</td><td>NH2</td><td>Machine resonance suppression filter 2
Set the notch frequency of the machine resonance suppression filter 2.
To enable the setting value, select "Enabled (_ _ _ 1)" of "Machine resonance suppression filter 2 selection" in [Pr. PB16].</td><td>4500
[Hz]</td><td>10
to
4500</td></tr>
<tr><td>PB16</td><td>NHQ2</td><td>Notch shape selection 2
Set the shape of the machine resonance suppression filter 2.
<table>
<tr><th>Setting digit</th><th>Explanation</th><th>Initial value</th></tr>
<tr><td>_ _ _ x</td><td>Machine resonance suppression filter 2 selection
0: Disabled
1: Enabled</td><td>0h</td></tr>
<tr><td>_ _ x _</td><td>Notch depth selection
0: -40 dB
1: -14 dB
2: -8 dB
3: -4 dB</td><td>0h</td></tr>
<tr><td>_ x _ _</td><td>Notch width selection
0: α = 2
1: α = 3
2: α = 4
3: α = 5</td><td>0h</td></tr>
<tr><td>x _ _ _</td><td>For manufacturer setting</td><td>0h</td></tr>
</table></td><td colspan="2">Refer to Name and function column.</td></tr>
</table>

<table>
<tr><th>No.</th><th>Symbol</th><th>Name and function</th><th>Initial value [unit]</th><th>Setting range</th></tr>
<tr><td>PB17</td><td>NHF</td><td>Shaft resonance suppression filter
This is used for setting the shaft resonance suppression filter.
This is used to suppress a low-frequency machine vibration.
When you select "Automatic setting (_ _ _ 0)" of "Shaft resonance suppression filter selection" in [Pr. PB23], the value will be calculated automatically from the servo motor you use and load to motor inertia ratio. It will not automatically calculated for the liner servo motor. Set manually for "Manual setting (_ _ _ 1)".
When "Shaft resonance suppression filter selection" is "Disabled (_ _ _ 2)" in [Pr. PB23], the setting value of this parameter will be disabled.
When you select "Enabled (_ _ _ 1)" of "Machine resonance suppression filter 4 selection" in [Pr. PB49], the shaft resonance suppression filter is not available.
<table>
<tr><th>Setting digit</th><th>Explanation</th><th>Initial value</th></tr>
<tr><td>_ _ x x</td><td>Shaft resonance suppression filter setting frequency selection
This is used for setting the shaft resonance suppression filter.
Refer to table 5.4 for settings.
Set the value closest to the frequency you need.</td><td>00h</td></tr>
<tr><td>_ x _ _</td><td>Notch depth selection
0: -40 dB
1: -14 dB
2: -8 dB
3: -4 dB</td><td>0h</td></tr>
<tr><td>x _ _ _</td><td>For manufacturer setting</td><td>0h</td></tr>
</table>
Table 5.4 Shaft resonance suppression filter setting frequency selection
<table>
<tr><th>Setting value</th><th>Frequency [Hz]</th><th>Setting value</th><th>Frequency [Hz]</th></tr>
<tr><td>00</td><td>Disabled</td><td>10</td><td>562</td></tr>
<tr><td>01</td><td>Disabled</td><td>11</td><td>529</td></tr>
<tr><td>02</td><td>4500</td><td>12</td><td>500</td></tr>
<tr><td>03</td><td>3000</td><td>13</td><td>473</td></tr>
<tr><td>04</td><td>2250</td><td>14</td><td>450</td></tr>
<tr><td>05</td><td>1800</td><td>15</td><td>428</td></tr>
<tr><td>06</td><td>1500</td><td>16</td><td>409</td></tr>
<tr><td>07</td><td>1285</td><td>17</td><td>391</td></tr>
<tr><td>08</td><td>1125</td><td>18</td><td>375</td></tr>
<tr><td>09</td><td>1000</td><td>19</td><td>360</td></tr>
<tr><td>0A</td><td>900</td><td>1A</td><td>346</td></tr>
<tr><td>0B</td><td>818</td><td>1B</td><td>333</td></tr>
<tr><td>0C</td><td>750</td><td>1C</td><td>321</td></tr>
<tr><td>0D</td><td>692</td><td>1D</td><td>310</td></tr>
<tr><td>0E</td><td>642</td><td>1E</td><td>300</td></tr>
<tr><td>0F</td><td>600</td><td>1F</td><td>290</td></tr>
</table></td><td>Refer to Name and function column.</td><td></td></tr>
<tr><td>PB18</td><td>LPF</td><td>Low-pass filter setting
Set the low-pass filter.
The following shows a relation of a required parameter to this parameter.
<table>
<tr><th>[Pr. PB23]</th><th>[Pr. PB18]</th></tr>
<tr><td>_ _ 0 _ (Initial value)</td><td>Automatic setting</td></tr>
<tr><td>_ _ 1 _</td><td>Setting value enabled</td></tr>
<tr><td>_ _ 2 _</td><td>Setting value disabled</td></tr>
</table></td><td>3141 [rad/s]</td><td>100 to 18000</td></tr>
</table>

No.	Symbol	Name and function	Initial value [unit]	Setting range
PB19	VRF11	Vibration suppression control 1 - Vibration frequency Set the vibration frequency for vibration suppression control 1 to suppress low-frequency machine vibration. When "Vibration suppression control 1 tuning mode selection" is "Automatic setting (_ _ _ 1)" in [Pr. PB02], this parameter will be set automatically. Set manually for "Manual setting (_ _ _ 2)". Refer to section 7.1.5 for details.	100.0 [Hz]	0.1 to 300.0
PB20	VRF12	Vibration suppression control 1 - Resonance frequency Set the resonance frequency for vibration suppression control 1 to suppress low-frequency machine vibration. When "Vibration suppression control 1 tuning mode selection" is "Automatic setting (_ _ _ 1)" in [Pr. PB02], this parameter will be set automatically. Set manually for "Manual setting (_ _ _ 2)". Refer to section 7.1.5 for details.	100.0 [Hz]	0.1 to 300.0
PB21	VRF13	Vibration suppression control 1 - Vibration frequency damping Set a damping of the vibration frequency for vibration suppression control 1 to suppress low-frequency machine vibration. When "Vibration suppression control 1 tuning mode selection" is "Automatic setting (_ _ _ 1)" in [Pr. PB02], this parameter will be set automatically. Set manually for "Manual setting (_ _ _ 2)". Refer to section 7.1.5 for details.	0.00	0.00 to 0.30
PB22	VRF14	Vibration suppression control 1 - Resonance frequency damping Set a damping of the resonance frequency for vibration suppression control 1 to suppress low-frequency machine vibration. When "Vibration suppression control 1 tuning mode selection" is "Automatic setting (_ _ _ 1)" in [Pr. PB02], this parameter will be set automatically. Set manually for "Manual setting (_ _ _ 2)". Refer to section 7.1.5 for details.	0.00	0.00 to 0.30
PB23	VFBF	Low-pass filter selection Select the shaft resonance suppression filter and low-pass filter.	Refer to Name and function column.	

Setting digit	Explanation	Initial value
_ _ _ x	Shaft resonance suppression filter selection 0: Automatic setting 1: Manual setting 2: Disabled When you select "Enabled (_ _ _ 1)" of "Machine resonance suppression filter 4 selection" in [Pr. PB49], the shaft resonance suppression filter is not available.	0h
_ _ x _	Low-pass filter selection 0: Automatic setting 1: Manual setting 2: Disabled	0h
_ x _ _	For manufacturer setting	0h
x _ _ _		0h

<table>
<tr><th>No.</th><th>Symbol</th><th>Name and function</th><th>Initial value [unit]</th><th>Setting range</th></tr>
<tr><td>PB24</td><td>*MVS</td><td>Slight vibration suppression control
Select the slight vibration suppression control and PI-PID switching control.
<table>
<tr><th>Setting digit</th><th>Explanation</th><th>Initial value</th></tr>
<tr><td>_ _ _ x</td><td>Slight vibration suppression control selection
0: Disabled
1: Enabled
To enable the slight vibration suppression control, select "Manual mode (_ _ _ 3)" of "Gain adjustment mode selection" in [Pr. PA08].
Slight vibration suppression control cannot be used in the speed control mode.</td><td>0h</td></tr>
<tr><td>_ _ x _</td><td>PI-PID switching control selection
0: PI control enabled
(Switching to PID control is possible with commands of servo system controller.)
3: Continuous PID control enabled
If the servo motor at a stop is rotated even one pulse due to any external factor, it generates torque to compensate for a position shift. When the servo motor shaft is to be locked mechanically after positioning completion (stop), enabling PID control and completing positioning simultaneously will suppress the unnecessary torque generated to compensate for a position shift.</td><td>0h</td></tr>
<tr><td>_ x _ _</td><td rowspan="2">For manufacturer setting</td><td>0h</td></tr>
<tr><td>x _ _ _</td><td>0h</td></tr>
</table></td><td>Refer to Name and function column.</td><td></td></tr>
<tr><td>PB26</td><td>*CDP</td><td>Gain switching function
Select the gain switching condition.
Set conditions to enable the gain switching values set in [Pr. PB29] to [Pr. PB36] and [Pr. PB56] to [Pr. PB60].
<table>
<tr><th>Setting digit</th><th>Explanation</th><th>Initial value</th></tr>
<tr><td>_ _ _ x</td><td>Gain switching selection
0: Disabled
1: Control command from controller is enabled
2: Command frequency
3: Droop pulses
4: Servo motor speed/linear servo motor speed</td><td>0h</td></tr>
<tr><td>_ _ x _</td><td>Gain switching condition selection
0: Gain after switching is enabled with gain switching condition or more
1: Gain after switching is enabled with gain switching condition or less</td><td>0h</td></tr>
<tr><td>_ x _ _</td><td rowspan="2">For manufacturer setting</td><td>0h</td></tr>
<tr><td>x _ _ _</td><td>0h</td></tr>
</table></td><td>Refer to Name and function column.</td><td></td></tr>
<tr><td>PB27</td><td>CDL</td><td>Gain switching condition
This is used to set the value of gain switching (command frequency, droop pulses, and servo motor speed/linear servo motor speed) selected in [Pr. PB26].
The set value unit differs depending on the switching condition item. (Refer to section 7.2.3.)
The unit "r/min" will be "mm/s" for linear servo motors.</td><td>10
[kpulse/s]
/[pulse]
/[r/min]</td><td>0 to 65535</td></tr>
<tr><td>PB28</td><td>CDT</td><td>Gain switching time constant
This is used to set the time constant at which the gains will change in response to the conditions set in [Pr. PB26] and [Pr. PB27].</td><td>1
[ms]</td><td>0 to 100</td></tr>
<tr><td>PB29</td><td>GD2B</td><td>Load to motor inertia ratio/load to motor mass ratio after gain switching
This is used to set the load to motor inertia ratio/load to motor mass ratio when gain switching is enabled.
This parameter is enabled only when you select "Manual mode (_ _ _ 3)" of "Gain adjustment mode selection" in [Pr. PA08].</td><td>7.00
[Multiplier]</td><td>0.00 to 300.00</td></tr>
</table>

No.	Symbol	Name and function	Initial value [unit]	Setting range
PB30	PG2B	Position loop gain after gain switching Set the position loop gain when the gain switching is enabled. When you set a value less than 1.0 rad/s, the value will be the same as [Pr. PB08]. This parameter is enabled only when you select "Manual mode (_ _ _ 3)" of "Gain adjustment mode selection" in [Pr. PA08].	0.0 [rad/s]	0.0 to 2000.0
PB31	VG2B	Speed loop gain after gain switching Set the speed loop gain when the gain switching is enabled. When you set a value less than 20 rad/s, the value will be the same as [Pr. PB09]. This parameter is enabled only when you select "Manual mode (_ _ _ 3)" of "Gain adjustment mode selection" in [Pr. PA08].	0 [rad/s]	0 to 65535
PB32	VICB	Speed integral compensation after gain switching Set the speed integral compensation when the gain changing is enabled. When you set a value less than 0.1 ms, the value will be the same as [Pr. PB10]. This parameter is enabled only when you select "Manual mode (_ _ _ 3)" of "Gain adjustment mode selection" in [Pr. PA08].	0.0 [ms]	0.0 to 5000.0
PB33	VRF11B	Vibration suppression control 1 - Vibration frequency after gain switching Set the vibration frequency for vibration suppression control 1 when the gain switching is enabled. When you set a value less than 0.1 Hz, the value will be the same as [Pr. PB19]. This parameter will be enabled only when the following conditions are fulfilled. ・"Gain adjustment mode selection" in [Pr. PA08] is "Manual mode (_ _ _ 3)". ・"Vibration suppression control 1 tuning mode selection" in [Pr. PB02] is "Manual setting (_ _ _ 2)". ・"Gain switching selection" in [Pr. PB26] is "Control command from controller is enabled (_ _ _ 1)". Switching during driving may cause a shock. Be sure to switch them after the servo motor or linear servo motor stops.	0.0 [Hz]	0.0 to 300.0
PB34	VRF12B	Vibration suppression control 1 - Resonance frequency after gain switching Set the resonance frequency for vibration suppression control 1 when the gain switching is enabled. When you set a value less than 0.1 Hz, the value will be the same as [Pr. PB20]. This parameter will be enabled only when the following conditions are fulfilled. ・"Gain adjustment mode selection" in [Pr. PA08] is "Manual mode (_ _ _ 3)". ・"Vibration suppression control 1 tuning mode selection" in [Pr. PB02] is "Manual setting (_ _ _ 2)". ・"Gain switching selection" in [Pr. PB26] is "Control command from controller is enabled (_ _ _ 1)". Switching during driving may cause a shock. Be sure to switch them after the servo motor or linear servo motor stops.	0.0 [Hz]	0.0 to 300.0
PB35	VRF13B	Vibration suppression control 1 - Vibration frequency damping after gain switching Set a damping of the vibration frequency for vibration suppression control 1 when the gain switching is enabled. This parameter will be enabled only when the following conditions are fulfilled. ・"Gain adjustment mode selection" in [Pr. PA08] is "Manual mode (_ _ _ 3)". ・"Vibration suppression control 1 tuning mode selection" in [Pr. PB02] is "Manual setting (_ _ _ 2)". ・"Gain switching selection" in [Pr. PB26] is "Control command from controller is enabled (_ _ _ 1)". Switching during driving may cause a shock. Be sure to switch them after the servo motor or linear servo motor stops.	0.00	0.00 to 0.30
PB36	VRF14B	Vibration suppression control 1 - Resonance frequency damping after gain switching Set a damping of the resonance frequency for vibration suppression control 1 when the gain switching is enabled. This parameter will be enabled only when the following conditions are fulfilled. ・"Gain adjustment mode selection" in [Pr. PA08] is "Manual mode (_ _ _ 3)". ・"Vibration suppression control 1 tuning mode selection" in [Pr. PB02] is "Manual setting (_ _ _ 2)". ・"Gain switching selection" in [Pr. PB26] is "Control command from controller is enabled (_ _ _ 1)". Switching during driving may cause a shock. Be sure to switch them after the servo motor or linear servo motor stops.	0.00	0.00 to 0.30

No.	Symbol	Name and function	Initial value [unit]	Setting range
PB45	CNHF	Command notch filter Set the command notch filter.	Refer to Name and function column.	

Setting digit	Explanation	Initial value
_ _ x x	Command notch filter setting frequency selection Refer to table 5.5 for the relation of setting values to frequency.	00h
_ x _ _	Notch depth selection Refer to table 5.6 for details.	0h
x _ _ _	For manufacturer setting	0h

Table 5.5 Command notch filter setting frequency selection

Setting value	Frequency [Hz]	Setting value	Frequency [Hz]	Setting value	Frequency [Hz]
00	Disabled	20	70	40	17.6
01	2250	21	66	41	16.5
02	1125	22	62	42	15.6
03	750	23	59	43	14.8
04	562	24	56	44	14.1
05	450	25	53	45	13.4
06	375	26	51	46	12.8
07	321	27	48	47	12.2
08	281	28	46	48	11.7
09	250	29	45	49	11.3
0A	225	2A	43	4A	10.8
0B	204	2B	41	4B	10.4
0C	187	2C	40	4C	10
0D	173	2D	38	4D	9.7
0E	160	2E	37	4E	9.4
0F	150	2F	36	4F	9.1
10	140	30	35.2	50	8.8
11	132	31	33.1	51	8.3
12	125	32	31.3	52	7.8
13	118	33	29.6	53	7.4
14	112	34	28.1	54	7.0
15	107	35	26.8	55	6.7
16	102	36	25.6	56	6.4
17	97	37	24.5	57	6.1
18	93	38	23.4	58	5.9
19	90	39	22.5	59	5.6
1A	86	3A	21.6	5A	5.4
1B	83	3B	20.8	5B	5.2
1C	80	3C	20.1	5C	5.0
1D	77	3D	19.4	5D	4.9
1E	75	3E	18.8	5E	4.7
1F	72	3F	18.2	5F	4.5

<table>
<tr><th>No.</th><th>Symbol</th><th>Name and function</th><th>Initial value [unit]</th><th>Setting range</th></tr>
<tr><td>PB45</td><td>CNHF</td><td>Table 5.6 Notch depth selection
<table>
<tr><th>Setting value</th><th>Depth [dB]</th></tr>
<tr><td>0</td><td>-40.0</td></tr>
<tr><td>1</td><td>-24.1</td></tr>
<tr><td>2</td><td>-18.1</td></tr>
<tr><td>3</td><td>-14.5</td></tr>
<tr><td>4</td><td>-12.0</td></tr>
<tr><td>5</td><td>-10.1</td></tr>
<tr><td>6</td><td>-8.5</td></tr>
<tr><td>7</td><td>-7.2</td></tr>
</table>
<table>
<tr><th>Setting value</th><th>Depth [dB]</th></tr>
<tr><td>8</td><td>-6.0</td></tr>
<tr><td>9</td><td>-5.0</td></tr>
<tr><td>A</td><td>-4.1</td></tr>
<tr><td>B</td><td>-3.3</td></tr>
<tr><td>C</td><td>-2.5</td></tr>
<tr><td>D</td><td>-1.8</td></tr>
<tr><td>E</td><td>-1.2</td></tr>
<tr><td>F</td><td>-0.6</td></tr>
</table></td><td colspan="2">Refer to Name and function column.</td></tr>
<tr><td>PB46</td><td>NH3</td><td>Machine resonance suppression filter 3
Set the notch frequency of the machine resonance suppression filter 3.
To enable the setting value, select "Enabled (_ _ _ 1)" of "Machine resonance suppression filter 3 selection" in [Pr. PB47].</td><td>4500 [Hz]</td><td>10 to 4500</td></tr>
<tr><td>PB47</td><td>NHQ3</td><td>Notch shape selection 3
Set the shape of the machine resonance suppression filter 3.
<table>
<tr><th>Setting digit</th><th>Explanation</th><th>Initial value</th></tr>
<tr><td>_ _ _ x</td><td>Machine resonance suppression filter 3 selection
0: Disabled
1: Enabled</td><td>0h</td></tr>
<tr><td>_ _ x _</td><td>Notch depth selection
0: -40 dB
1: -14 dB
2: -8 dB
3: -4 dB</td><td>0h</td></tr>
<tr><td>_ x _ _</td><td>Notch width selection
0: α = 2
1: α = 3
2: α = 4
3: α = 5</td><td>0h</td></tr>
<tr><td>x _ _ _</td><td>For manufacturer setting</td><td>0h</td></tr>
</table></td><td colspan="2">Refer to Name and function column.</td></tr>
<tr><td>PB48</td><td>NH4</td><td>Machine resonance suppression filter 4
Set the notch frequency of the machine resonance suppression filter 4.
To enable the setting value, select "Enabled (_ _ _ 1)" of "Machine resonance suppression filter 4 selection" in [Pr. PB49].</td><td>4500 [Hz]</td><td>10 to 4500</td></tr>
</table>

<table>
<tr><th>No.</th><th>Symbol</th><th>Name and function</th><th>Initial value [unit]</th><th>Setting range</th></tr>
<tr><td>PB49</td><td>NHQ4</td><td>Notch shape selection 4
Set the shape of the machine resonance suppression filter 4.
<table>
<tr><th>Setting digit</th><th>Explanation</th><th>Initial value</th></tr>
<tr><td>_ _ _ x</td><td>Machine resonance suppression filter 4 selection
0: Disabled
1: Enabled
When you select "Enabled" of this digit, [Pr. PB17 Shaft resonance suppression filter] is not available.</td><td>0h</td></tr>
<tr><td>_ _ x _</td><td>Notch depth selection
0: -40 dB
1: -14 dB
2: -8 dB
3: -4 dB</td><td>0h</td></tr>
<tr><td>_ x _ _</td><td>Notch width selection
0: α = 2
1: α = 3
2: α = 4
3: α = 5</td><td>0h</td></tr>
<tr><td>x _ _ _</td><td>For manufacturer setting</td><td>0h</td></tr>
</table></td><td colspan="2">Refer to Name and function column.</td></tr>
<tr><td>PB50</td><td>NH5</td><td>Machine resonance suppression filter 5
Set the notch frequency of the machine resonance suppression filter 5.
To enable the setting value, select "Enabled (_ _ _ 1)" of "Machine resonance suppression filter 5 selection" in [Pr. PB51].</td><td>4500 [Hz]</td><td>10 to 4500</td></tr>
<tr><td>PB51</td><td>NHQ5</td><td>Notch shape selection 5
Set the shape of the machine resonance suppression filter 5.
When you select "Enabled (_ _ _ 1)" of "Robust filter selection" in [Pr. PE41], the machine resonance suppression filter 5 is not available.
<table>
<tr><th>Setting digit</th><th>Explanation</th><th>Initial value</th></tr>
<tr><td>_ _ _ x</td><td>Machine resonance suppression filter 5 selection
0: Disabled
1: Enabled</td><td>0h</td></tr>
<tr><td>_ _ x _</td><td>Notch depth selection
0: -40 dB
1: -14 dB
2: -8 dB
3: -4 dB</td><td>0h</td></tr>
<tr><td>_ x _ _</td><td>Notch width selection
0: α = 2
1: α = 3
2: α = 4
3: α = 5</td><td>0h</td></tr>
<tr><td>x _ _ _</td><td>For manufacturer setting</td><td>0h</td></tr>
</table></td><td colspan="2">Refer to Name and function column.</td></tr>
<tr><td>PB52</td><td>VRF21</td><td>Vibration suppression control 2 - Vibration frequency
Set the vibration frequency for vibration suppression control 2 to suppress low-frequency machine vibration.
To enable this, select "3 inertia mode (_ _ _ 1)" of "Vibration suppression mode selection" in [Pr. PA24].
When "Vibration suppression control 2 tuning mode selection" is "Automatic setting (_ _ 1 _)" in [Pr. PB02], this parameter will be set automatically. Set manually for "Manual setting (_ _ 2 _)".</td><td>100.0 [Hz]</td><td>0.1 to 300.0</td></tr>
</table>

No.	Symbol	Name and function	Initial value [unit]	Setting range
PB53	VRF22	Vibration suppression control 2 - Resonance frequency Set the resonance frequency for vibration suppression control 2 to suppress low-frequency machine vibration. To enable this, select "3 inertia mode (_ _ _ 1)" of "Vibration suppression mode selection" in [Pr. PA24]. When "Vibration suppression control 2 tuning mode selection" is "Automatic setting (_ _ 1 _)" in [Pr. PB02], this parameter will be set automatically. Set manually for "Manual setting (_ _ 2 _)".	100.0 [Hz]	0.1 to 300.0
PB54	VRF23	Vibration suppression control 2 - Vibration frequency damping Set a damping of the vibration frequency for vibration suppression control 2 to suppress low-frequency machine vibration. To enable this, select "3 inertia mode (_ _ _ 1)" of "Vibration suppression mode selection" in [Pr. PA24]. When "Vibration suppression control 2 tuning mode selection" is "Automatic setting (_ _ 1 _)" in [Pr. PB02], this parameter will be set automatically. Set manually for "Manual setting (_ _ 2 _)".	0.00	0.00 to 0.30
PB55	VRF24	Vibration suppression control 2 - Resonance frequency damping Set a damping of the resonance frequency for vibration suppression control 2 to suppress low-frequency machine vibration. To enable this, select "3 inertia mode (_ _ _ 1)" of "Vibration suppression mode selection" in [Pr. PA24]. When "Vibration suppression control 2 tuning mode selection" is "Automatic setting (_ _ 1 _)" in [Pr. PB02], this parameter will be set automatically. Set manually for "Manual setting (_ _ 2 _)".	0.00	0.00 to 0.30
PB56	VRF21B	Vibration suppression control 2 - Vibration frequency after gain switching Set the vibration frequency for vibration suppression control 2 when the gain switching is enabled. To enable this, select "3 inertia mode (_ _ _ 1)" of "Vibration suppression mode selection" in [Pr. PA24]. This parameter will be enabled only when the following conditions are fulfilled. ・"Gain adjustment mode selection" in [Pr. PA08] is "Manual mode (_ _ _ 3)". ・"Vibration suppression control 2 tuning mode selection" in [Pr. PB02] is "Manual setting (_ _ 2 _)". ・"Gain switching selection" in [Pr. PB26] is "Control command from controller is enabled (_ _ _ 1)". Switching during driving may cause a shock. Be sure to switch them after the servo motor or linear servo motor stops.	0.0 [Hz]	0.0 to 300.0
PB57	VRF22B	Vibration suppression control 2 - Resonance frequency after gain switching Set the resonance frequency for vibration suppression control 2 when the gain switching is enabled. To enable this, select "3 inertia mode (_ _ _ 1)" of "Vibration suppression mode selection" in [Pr. PA24]. This parameter will be enabled only when the following conditions are fulfilled. ・"Gain adjustment mode selection" in [Pr. PA08] is "Manual mode (_ _ _ 3)". ・"Vibration suppression control 2 tuning mode selection" in [Pr. PB02] is "Manual setting (_ _ 2 _)". ・"Gain switching selection" in [Pr. PB26] is "Control command from controller is enabled (_ _ _ 1)". Switching during driving may cause a shock. Be sure to switch them after the servo motor or linear servo motor stops.	0.0 [Hz]	0.0 to 300.0

No.	Symbol	Name and function	Initial value [unit]	Setting range
PB58	VRF23B	Vibration suppression control 2 - Vibration frequency damping after gain switching Set a damping of the vibration frequency for vibration suppression control 2 when the gain switching is enabled. To enable this, select "3 inertia mode (_ _ _ 1)" of "Vibration suppression mode selection" in [Pr. PA24]. This parameter will be enabled only when the following conditions are fulfilled. ・"Gain adjustment mode selection" in [Pr. PA08] is "Manual mode (_ _ _ 3)". ・"Vibration suppression control 2 tuning mode selection" in [Pr. PB02] is "Manual setting (_ _ 2 _)". ・"Gain switching selection" in [Pr. PB26] is "Control command from controller is enabled (_ _ _ 1)". Switching during driving may cause a shock. Be sure to switch them after the servo motor or linear servo motor stops.	0.00	0.00 to 0.30
PB59	VRF24B	Vibration suppression control 2 - Resonance frequency damping after gain switching Set a damping of the resonance frequency for vibration suppression control 2 when the gain switching is enabled. To enable this, select "3 inertia mode (_ _ _ 1)" of "Vibration suppression mode selection" in [Pr. PA24]. This parameter will be enabled only when the following conditions are fulfilled. ・"Gain adjustment mode selection" in [Pr. PA08] is "Manual mode (_ _ _ 3)". ・"Vibration suppression control 2 tuning mode selection" in [Pr. PB02] is "Manual setting (_ _ 2 _)". ・"Gain switching selection" in [Pr. PB26] is "Control command from controller is enabled (_ _ _ 1)". Switching during driving may cause a shock. Be sure to switch them after the servo motor or linear servo motor stops.	0.00	0.00 to 0.30
PB60	PG1B	Model loop gain after gain switching Set the model loop gain when the gain switching is enabled. When you set a value less than 1.0 rad/s, the value will be the same as [Pr. PB07]. This parameter will be enabled only when the following conditions are fulfilled. ・"Gain adjustment mode selection" in [Pr. PA08] is "Manual mode (_ _ _ 3)". ・"Gain switching selection" in [Pr. PB26] is "Control command from controller is enabled (_ _ _ 1)". Switching during driving may cause a shock. Be sure to switch them after the servo motor or linear servo motor stops.	0.0 [rad/s]	0.0 to 2000.0

5.2.3 Extension setting parameters ([Pr. PC_ _])

No.	Symbol	Name and function	Initial value [unit]	Setting range
PC01	ERZ	Error excessive alarm level Set an error excessive alarm level. Set this per rev. for rotary servo motors and direct drive motors. Setting "0" will be 3 rev. Setting over 200 rev will be clamped with 200 rev. Set this per mm for linear servo motors. Setting "0" will be 100 mm. Note. Setting can be changed in [Pr. PC06].	0 [rev]/ [mm] (Note)	0 to 1000
PC02	MBR	Electromagnetic brake sequence output This is used to set the delay time between MBR (Electromagnetic brake interlock) and the base drive circuit is shut-off.	0 [ms]	0 to 1000
PC03	*ENRS	Encoder output pulse selection This is used to select the encoder pulse direction and encoder output pulse setting.	Refer to Name and function column.	

Setting digit	Explanation	Initial value
_ _ _ x	Encoder output pulse phase selection 0: Increasing A-phase 90° in CCW or positive direction 1: Increasing A-phase 90° in CW or negative direction	0h
_ _ x _	Encoder output pulse setting selection 0: Output pulse setting (When "_ 1 0 _" is set to this parameter, [AL. 37 Parameter error] will occur.) 1: Division ratio setting 3: A-phase/B-phase pulse electronic gear setting A/B-phase pulse through output setting For linear servo motors, selecting "0" will output as division ratio setting because the output pulse setting is not available. Setting "4" will be enabled only when A/B/Z-phase differential output linear encoder is used. And "Encoder output pulse phase selection (_ _ _ x)" will be disabled. When another encoder is connected, [AL. 37 Parameter error] will occur. Selecting "Standard control mode (_ _ 0 _)" in [Pr. PA01 Operation mode] will trigger [AL. 37 Parameter error].	0h
_ x _ _	Selection of the encoders for encoder output pulse This is used for selecting an encoder for servo amplifier output. 0: Servo motor encoder 1: Load-side encoder Selecting "1" in other than fully closed loop system or standard control system (scale measurement function: enabled) triggers [AL. 37 Parameter error].	0h
x _ _ _	For manufacturer setting	0h

Setting value	Servo motor rotation direction/ linear servo motor travel direction	
	CCW or positive direction	CW or negative direction
0	A-phase B-phase	A-phase B-phase
1	A-phase B-phase	A-phase B-phase

<table>
<tr><th>No.</th><th>Symbol</th><th>Name and function</th><th>Initial value [unit]</th><th>Setting range</th></tr>
<tr><td>PC04</td><td>**COP1</td><td>Function selection C-1
Select the encoder cable communication method selection.
<table>
<tr><th>Setting digit</th><th>Explanation</th><th>Initial value</th></tr>
<tr><td>_ _ _ x</td><td rowspan="3">For manufacturer setting</td><td>0h</td></tr>
<tr><td>_ _ x _</td><td>0h</td></tr>
<tr><td>_ x _ _</td><td>0h</td></tr>
<tr><td>x _ _ _</td><td>Encoder cable communication method selection
0: Two-wire type
1: Four-wire type
Incorrect setting will result in [AL. 16 Encoder initial communication error 1]. Or [AL. 20 Encoder initial communication error 1] will occur. Setting "1" will trigger [AL. 37] while "Fully closed loop control mode (_ _ 1 _)" is selected in [Pr. PA01] (except MR-J4-_B_-RJ).</td><td>0h</td></tr>
</table></td><td colspan="2">Refer to Name and function column.</td></tr>
<tr><td>PC05</td><td>**COP2</td><td>Function selection C-2
This is used to select the motor-less operation. This is not used in linear servo motor control mode, fully closed loop control, and DD motor control mode.
<table>
<tr><th>Setting digit</th><th>Explanation</th><th>Initial value</th></tr>
<tr><td>_ _ _ x</td><td>Motor-less operation selection
0: Disabled
1: Enabled</td><td>0h</td></tr>
<tr><td>_ _ x _</td><td rowspan="3">For manufacturer setting</td><td>0h</td></tr>
<tr><td>_ x _ _</td><td>0h</td></tr>
<tr><td>x _ _ _</td><td>0h</td></tr>
</table></td><td colspan="2">Refer to Name and function column.</td></tr>
<tr><td>PC06</td><td>*COP3</td><td>Function selection C-3
Select the error excessive alarm level setting for [Pr. PC01]. The parameter is not available in the speed control mode and torque control mode.
<table>
<tr><th>Setting digit</th><th>Explanation</th><th>Initial value</th></tr>
<tr><td>_ _ _ x</td><td rowspan="3">For manufacturer setting</td><td>0h</td></tr>
<tr><td>_ _ x _</td><td>0h</td></tr>
<tr><td>_ x _ _</td><td>0h</td></tr>
<tr><td>x _ _ _</td><td>Error excessive alarm level unit selection
0: Per 1 rev or 1 mm
1: Per 0.1 rev or 0.1 mm
2: Per 0.01 rev or 0.01 mm
3: Per 0.001 rev or 0.001 mm</td><td>0h</td></tr>
</table></td><td colspan="2">Refer to Name and function column.</td></tr>
<tr><td>PC07</td><td>ZSP</td><td>Zero speed
Used to set the output range of ZSP (Zero speed detection).
ZSP (Zero speed detection) has hysteresis of 20 r/min or 20 mm/s.</td><td>50
[r/min]/
[mm/s]</td><td>0
to
10000</td></tr>
<tr><td>PC08</td><td>OSL</td><td>Overspeed alarm detection level
This is used to set an overspeed alarm detection level.
When you set a value more than "servo motor maximum speed × 120%" or "linear servo motor maximum speed × 120%", the set value will be clamped.
When you set "0", the value of "(linear) servo motor maximum speed × 120%" will be set.</td><td>0
[r/min]/
[mm/s]</td><td>0
to
20000</td></tr>
</table>

No.	Symbol	Name and function	Initial value [unit]	Setting range
PC09	MOD1	Analog monitor 1 output Select a signal to output to MO1 (Analog monitor 1). Refer to appendix 11 (3) for detection point of output selection.	Refer to Name and function column.	

Setting digit	Explanation	Initial value
_ _ x x	Analog monitor 1 output selection Refer to table 5.7 for settings.	00h
_ x _ _	For manufacturer setting	0h
x _ _ _		0h

Table 5.7 Analog monitor setting value

Setting value	Item	Operation mode (Note 1)			
		Standard	Full.	Lin.	D.D.
00	(Linear) servo motor speed (±8 V/max. speed)	○	○	○	○
01	Torque or thrust (±8 V/max. torque or max. thrust)	○	○	○	○
02	(Linear) servo motor speed (+8V/max. speed)	○	○	○	○
03	Torque or thrust (+8 V/max. torque or max. thrust)	○	○	○	○
04	Current command (±8 V/max. current command)	○	○	○	○
05	Speed command (±8 V/max. speed)	○	○	○	○
06	Servo motor-side droop pulses (±10 V/100 pulses) (Note 2)	○	○	○	○
07	Servo motor-side droop pulses (±10 V/1000 pulses) (Note 2)	○	○	○	○
08	Servo motor-side droop pulses (±10 V/10000 pulses) (Note 2)	○	○	○	○
09	Servo motor-side droop pulses (±10 V/100000 pulses) (Note 2)	○	○	○	○
0A	Feedback position (±10 V/1 Mpulse) (Note 2)	○			
0B	Feedback position (±10 V/10 Mpulses) (Note 2)	○			
0C	Feedback position (±10 V/100 Mpulses) (Note 2)	○			
0D	Bus voltage (200 V class and 100 V class: +8 V/400 V, 400 V class: +8 V/800 V)	○	○	○	○
0E	Speed command 2 (±8 V/max. speed)	○	○	○	○
10	Load-side droop pulses (±10 V/100 pulses) (Note 2)		○		
11	Load-side droop pulses (±10 V/1000 pulses) (Note 2)		○		
12	Load-side droop pulses (±10 V/10000 pulses) (Note 2)		○		
13	Load-side droop pulses (±10 V/100000 pulses) (Note 2)		○		
14	Load-side droop pulses (±10 V/1 Mpulse) (Note 2)		○		
15	Servo motor-side/load-side position deviation (±10 V/100000 pulses)		○		
16	Servo motor-side/load-side speed deviation (±8 V/max. speed)		○		
17	Encoder inside temperature (±10 V/±128 ˚C)	○	○		○

Note 1. Items with ○ are available for each operation mode.
Standard: Standard (semi closed loop system) use of the rotary servo motor
Full.: Fully closed loop system use of the rotary servo motor
Lin.: Linear servo motor use
D.D.: Direct drive (D.D.) motor use
2. Encoder pulse unit

<table>
<tr><th>No.</th><th>Symbol</th><th>Name and function</th><th>Initial value [unit]</th><th>Setting range</th></tr>
<tr><td>PC10</td><td>MOD2</td><td>Analog monitor 2 output
Select a signal to output to MO2 (Analog monitor 2). Refer to appendix 11 (3) for detection point of output selection.
<table>
<tr><th>Setting digit</th><th>Explanation</th><th>Initial value</th></tr>
<tr><td>_ _ x x</td><td>Analog monitor 2 output selection
Refer to [Pr. PC09] for settings.</td><td>01h</td></tr>
<tr><td>_ x _ _</td><td rowspan="2">For manufacturer setting</td><td>0h</td></tr>
<tr><td>x _ _ _</td><td>0h</td></tr>
</table></td><td colspan="2">Refer to Name and function column.</td></tr>
<tr><td>PC11</td><td>MO1</td><td>Analog monitor 1 offset
This is used to set the offset voltage of MO1 (Analog monitor 1).</td><td>0 [mV]</td><td>-999 to 999</td></tr>
<tr><td>PC12</td><td>MO2</td><td>Analog monitor 2 offset
This is used to set the offset voltage of MO2 (Analog monitor 2).</td><td>0 [mV]</td><td>-999 to 999</td></tr>
<tr><td>PC13</td><td>MOSDL</td><td>Analog monitor - Feedback position output standard data - Low
Set a monitor output standard position (lower 4 digits) for the feedback position for when selecting "Feedback position" for MO1 (Analog monitor 1) and MO2 (Analog monitor 2).
Monitor output standard position = [Pr. PC14] setting × 10000 + [Pr. PC13] setting</td><td>0 [pulse]</td><td>-9999 to 9999</td></tr>
<tr><td>PC14</td><td>MOSDH</td><td>Analog monitor - Feedback position output standard data - High
Set a monitor output standard position (higher 4 digits) for the feedback position for when selecting "Feedback position" for MO1 (Analog monitor 1) and MO2 (Analog monitor 2).
Monitor output standard position = [Pr. PC14] setting × 10000 + [Pr. PC13] setting</td><td>0 [10000 pulses]</td><td>-9999 to 9999</td></tr>
<tr><td>PC17</td><td>**COP4</td><td>Function selection C-4
This is used to select a home position setting condition.
<table>
<tr><th>Setting digit</th><th>Explanation</th><th>Initial value</th></tr>
<tr><td>_ _ _ x</td><td>Selection of home position setting condition
0: Need to pass servo motor Z-phase after power on
1: Not need to pass servo motor Z-phase after power on</td><td>0h</td></tr>
<tr><td>_ _ x _</td><td rowspan="3">For manufacturer setting</td><td>0h</td></tr>
<tr><td>_ x _ _</td><td>0h</td></tr>
<tr><td>x _ _ _</td><td>0h</td></tr>
</table></td><td colspan="2">Refer to Name and function column.</td></tr>
<tr><td>PC18</td><td>*COP5</td><td>Function selection C-5
This is used to select an occurring condition of [AL. E9 Main circuit off warning].
<table>
<tr><th>Setting digit</th><th>Explanation</th><th>Initial value</th></tr>
<tr><td>_ _ _ x</td><td rowspan="3">For manufacturer setting</td><td>0h</td></tr>
<tr><td>_ _ x _</td><td>0h</td></tr>
<tr><td>_ x _ _</td><td>0h</td></tr>
<tr><td>x _ _ _</td><td>[AL. E9 Main circuit off warning] selection
0: Detection with ready-on and servo-on command
1: Detection with servo-on command</td><td>0h</td></tr>
</table></td><td colspan="2">Refer to Name and function column.</td></tr>
</table>

<table>
<tr><th>No.</th><th>Symbol</th><th>Name and function</th><th>Initial value [unit]</th><th>Setting range</th></tr>
<tr><td>PC20</td><td>*COP7</td><td>Function selection C-7
This is used to select an undervoltage alarm detection method.
<table>
<tr><th>Setting digit</th><th>Explanation</th><th>Initial value</th></tr>
<tr><td>_ _ _ x</td><td>[AL. 10 Undervoltage] detection method selection
This is set when FR-RC-(H) or FR-CV-(H) is used and if [AL. 10 undervoltage] occurs due to distorted power supply voltage waveform.
0: [AL. 10] not occurrence
1: [AL. 10] occurrence</td><td>0h</td></tr>
<tr><td>_ _ x _</td><td rowspan="3">For manufacturer setting</td><td>0h</td></tr>
<tr><td>_ x _ _</td><td>0h</td></tr>
<tr><td>x _ _ _</td><td>0h</td></tr>
</table></td><td colspan="2">Refer to Name and function column.</td></tr>
<tr><td>PC21</td><td>*BPS</td><td>Alarm history clear
Used to clear the alarm history.
<table>
<tr><th>Setting digit</th><th>Explanation</th><th>Initial value</th></tr>
<tr><td>_ _ _ x</td><td>Alarm history clear selection
0: Disabled
1: Enabled
When you select "Enabled", the alarm history will be cleared at next power-on. After the alarm history is cleared, the setting is automatically disabled.</td><td>0h</td></tr>
<tr><td>_ _ x _</td><td rowspan="3">For manufacturer setting</td><td>0h</td></tr>
<tr><td>_ x _ _</td><td>0h</td></tr>
<tr><td>x _ _ _</td><td>0h</td></tr>
</table></td><td colspan="2">Refer to Name and function column.</td></tr>
<tr><td>PC24</td><td>RSBR</td><td>Forced stop deceleration time constant
This is used to set deceleration time constant when you use the forced stop deceleration function.
Set the time per ms from the rated speed to 0 r/min or 0 mm/s.
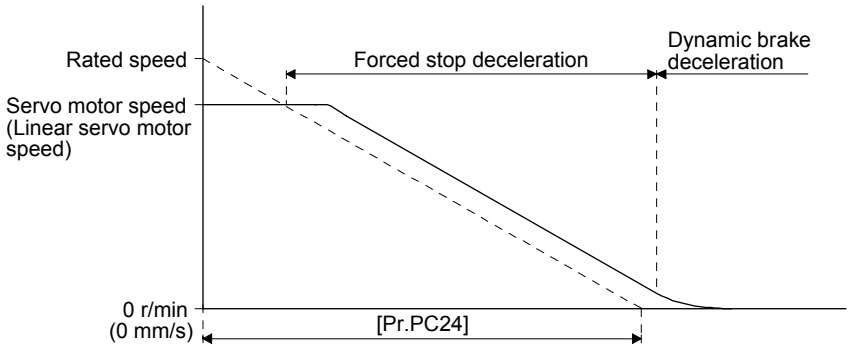

[Precautions]
・If the servo motor torque or linear servo motor thrust is saturated at the maximum torque during forced stop deceleration because the set time is too short, the time to stop will be longer than the set time constant.
・[AL. 50 Overload alarm 1] or [AL. 51 Overload alarm 2] may occur during forced stop deceleration, depending on the set value.
・After an alarm that leads to a forced stop deceleration, if an alarm that does not lead to a forced stop deceleration occurs or if the control circuit power supply is cut, dynamic braking will start regardless of the deceleration time constant setting.
・Set a longer time than deceleration time at quick stop of the controller. If a shorter time is set, [AL. 52 Error excessive] may occur.</td><td>100 [ms]</td><td>0 to 20000</td></tr>
</table>

<table>
<tr><th>No.</th><th>Symbol</th><th>Name and function</th><th>Initial value [unit]</th><th>Setting range</th></tr>
<tr><td>PC26</td><td>**COP8</td><td>Function selection C-8
Used to select the communication method of the encoder cable to be connected to the CN2L connector of MR-J4-_B_-RJ.
<table>
<tr><th>Setting digit</th><th>Explanation</th><th>Initial value</th></tr>
<tr><td>_ _ _ x</td><td rowspan="3">For manufacturer setting</td><td>0h</td></tr>
<tr><td>_ _ x _</td><td>0h</td></tr>
<tr><td>_ x _ _</td><td>0h</td></tr>
<tr><td>x _ _ _</td><td>Load-side encoder communication method
0: Two-wire type
1: Four-wire type
Setting "1" by using a servo amplifier other than MR-J4-_B_-RJ will trigger [AL. 37].</td><td>0h</td></tr>
</table></td><td colspan="2">Refer to Name and function column.</td></tr>
<tr><td>PC27</td><td>**COP9</td><td>Function selection C-9
This is used to select a polarity of the linear encoder or load-side encoder.
<table>
<tr><th>Setting digit</th><th>Explanation</th><th>Initial value</th></tr>
<tr><td>_ _ _ x</td><td>Encoder pulse count polarity selection
0: Encoder pulse increasing direction in the servo motor CCW or positive direction
1: Encoder pulse decreasing direction in the servo motor CCW or positive direction</td><td>0h</td></tr>
<tr><td>_ _ x _</td><td>For manufacturer setting</td><td>0h</td></tr>
<tr><td>_ x _ _</td><td>Selection of A/B/Z-phase input interface encoder Z-phase connection judgement function
This is used to select a non-signal detection of A/B/Z-phase input interface encoder pulse train signal used as linear encoder or load-side encoder.
This digit is enabled only when you use an A/B/Z-phase input interface encoder.
<table>
<tr><th rowspan="2">Setting value</th><th>Detection of disconnection</th><th colspan="3">Alarm status</th></tr>
<tr><th>Z-phase-side non-signal</th><th>Standard (scale measurement enabled)</th><th>Fully closed loop system</th><th>Linear servo system</th></tr>
<tr><td>0</td><td>Enabled</td><td>[AL. 20.6] (Z-phase)</td><td>[AL. 71.6] (Z-phase)</td><td>[AL. 20.6] (Z-phase)</td></tr>
<tr><td>1</td><td>Disabled</td><td></td><td></td><td></td></tr>
</table></td><td>0h</td></tr>
<tr><td>x _ _ _</td><td>For manufacturer setting</td><td>0h</td></tr>
</table></td><td colspan="2">Refer to Name and function column.</td></tr>
<tr><td>PC29</td><td>*COPB</td><td>Function selection C-B
This is used to select the POL reflection at torque control.
<table>
<tr><th>Setting digit</th><th>Explanation</th><th>Initial value</th></tr>
<tr><td>_ _ _ x</td><td rowspan="3">For manufacturer setting</td><td>0h</td></tr>
<tr><td>_ _ x _</td><td>0h</td></tr>
<tr><td>_ x _ _</td><td>0h</td></tr>
<tr><td>x _ _ _</td><td>POL reflection selection at torque control
0: Enabled
1: Disabled</td><td>0h</td></tr>
</table></td><td colspan="2">Refer to Name and function column.</td></tr>
</table>

No.	Symbol	Name and function	Initial value [unit]	Setting range
PC31	RSUP1	Vertical axis freefall prevention compensation amount Set the compensation amount of the vertical axis freefall prevention function. Set it per servo motor rotation amount or linear servo motor travel distance. When a positive value is set, compensation is performed to the address increasing direction. When a negative value is set, compensation is performed to the address decreasing direction. The vertical axis freefall prevention function is performed when all of the following conditions are met. 1) Position control mode 2) The value of the parameter is other than "0". 3) The forced stop deceleration function is enabled. 4) Alarm occurs or EM2 turns off when the (linear) servo motor speed is zero speed or less. 5) MBR (Electromagnetic brake interlock) was enabled in [Pr. PD07] to [Pr. PD09], and the base circuit shut-off delay time was set in [Pr. PC16].	0 [0.0001 rev]/ [0.01mm]	-25000 to 25000

5.2.4 I/O setting parameters ([Pr. PD_ _])

No.	Symbol	Name and function	Initial value [unit]	Setting range
PD02	*DIA2	Input signal automatic on selection 2	Refer to Name and function column.	

Setting digit HEX.	Setting digit BIN.	Explanation	Initial value
_ _ _ x	_ _ _ x	FLS (Upper stroke limit) selection 0: Disabled 1: Enabled	0h
	_ _ x _	RLS (Lower stroke limit) selection 0: Disabled 1: Enabled	
	_ x _ _	For manufacturer setting	
	x _ _ _		
_ _ x _		For manufacturer setting	0h
_ x _ _			0h
x _ _ _			0h

Convert the setting value into hexadecimal as follows.

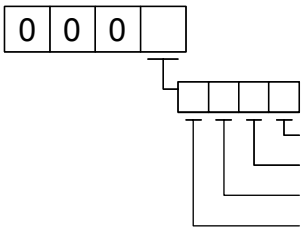

Signal name	Initial value BIN	Initial value HEX
FLS (Upper stroke limit) selection	0	0
RLS (Lower stroke limit) selection	0	
	0	
	0	

BIN 0: Use for an external input signal.
BIN 1: Automatic on

<table>
<tr><th>No.</th><th>Symbol</th><th>Name and function</th><th>Initial value [unit]</th><th>Setting range</th></tr>
<tr><td>PD07</td><td>*DO1</td><td>Output device selection 1
You can assign any output device to the CN3-13 pin.
<table>
<tr><th>Setting digit</th><th>Explanation</th><th>Initial value</th></tr>
<tr><td>_ _ x x</td><td>Device selection
Refer to table 5.8 for settings.</td><td>05h</td></tr>
<tr><td>_ x _ _</td><td rowspan="2">For manufacturer setting</td><td>0h</td></tr>
<tr><td>x _ _ _</td><td>0h</td></tr>
</table>
Table 5.8 Selectable output devices
<table>
<tr><th>Setting value</th><th>Output device</th></tr>
<tr><td>00</td><td>Always off</td></tr>
<tr><td>02</td><td>RD (Ready)</td></tr>
<tr><td>03</td><td>ALM (Malfunction)</td></tr>
<tr><td>04</td><td>INP (In-position)</td></tr>
<tr><td>05</td><td>MBR (Electromagnetic brake interlock)</td></tr>
<tr><td>06</td><td>DB (Dynamic brake interlock)</td></tr>
<tr><td>07</td><td>TLC (Limiting torque)</td></tr>
<tr><td>08</td><td>WNG (Warning)</td></tr>
<tr><td>09</td><td>BWNG (Battery warning)</td></tr>
<tr><td>0A</td><td>SA (Speed reached)</td></tr>
<tr><td>0C</td><td>ZSP (Zero speed detection)</td></tr>
<tr><td>0F</td><td>CDPS (Variable gain selection)</td></tr>
<tr><td>10</td><td>CLDS (During fully closed loop control)</td></tr>
<tr><td>11</td><td>ABSV (Absolute position undetermined)</td></tr>
<tr><td>17</td><td>MTTR (During tough drive)</td></tr>
</table></td><td colspan="2">Refer to Name and function column.</td></tr>
<tr><td>PD08</td><td>*DO2</td><td>Output device selection 2
You can assign any output device to the CN3-9 pin. INP (In-position) is assigned as the initial value.
The devices that can be assigned and the setting method are the same as in [Pr. PD07].
<table>
<tr><th>Setting digit</th><th>Explanation</th><th>Initial value</th></tr>
<tr><td>_ _ x x</td><td>Device selection
Refer to table 5.8 in [Pr. PD07] for settings.</td><td>04h</td></tr>
<tr><td>_ x _ _</td><td rowspan="2">For manufacturer setting</td><td>0h</td></tr>
<tr><td>x _ _ _</td><td>0h</td></tr>
</table></td><td colspan="2">Refer to Name and function column.</td></tr>
<tr><td>PD09</td><td>*DO3</td><td>Output device selection 3
You can assign any output device to the CN3-15 pin. ALM (Malfunction) is assigned as the initial value.
The devices that can be assigned and the setting method are the same as in [Pr. PD07].
<table>
<tr><th>Setting digit</th><th>Explanation</th><th>Initial value</th></tr>
<tr><td>_ _ x x</td><td>Device selection
Refer to table 5.8 in [Pr. PD07] for settings.</td><td>03h</td></tr>
<tr><td>_ x _ _</td><td rowspan="2">For manufacturer setting</td><td>0h</td></tr>
<tr><td>x _ _ _</td><td>0h</td></tr>
</table></td><td colspan="2">Refer to Name and function column.</td></tr>
</table>

<table>
<tr><th>No.</th><th>Symbol</th><th>Name and function</th><th>Initial value [unit]</th><th>Setting range</th></tr>
<tr><td>PD11</td><td>*DIF</td><td>Input filter setting
Select the input filter.
<table>
<tr><th>Setting digit</th><th>Explanation</th><th>Initial value</th></tr>
<tr><td>_ _ _ x</td><td>Input signal filter selection
Refer to the servo system controller instruction manual for the setting.
If external input signal causes chattering due to noise, etc., input filter is used to suppress it.
0: None
1: 0.888 [ms]
2: 1.777 [ms]
3: 2.666 [ms]
4: 3.555 [ms]</td><td>4h</td></tr>
<tr><td>_ _ x _</td><td rowspan="3">For manufacturer setting</td><td>0h</td></tr>
<tr><td>_ x _ _</td><td>0h</td></tr>
<tr><td>x _ _ _</td><td>0h</td></tr>
</table></td><td>Refer to Name and function column.</td><td></td></tr>
<tr><td>PD12</td><td>*DOP1</td><td>Function selection D-1
<table>
<tr><th>Setting digit</th><th>Explanation</th><th>Initial value</th></tr>
<tr><td>_ _ _ x</td><td rowspan="3">For manufacturer setting</td><td>0h</td></tr>
<tr><td>_ _ x _</td><td>0h</td></tr>
<tr><td>_ x _ _</td><td>0h</td></tr>
<tr><td>x _ _ _</td><td>Servo motor or linear servo motor thermistor enabled/disabled selection
(Supported by servo amplifiers with software version A5 or above.)
0: Enabled
1: Disabled
For servo motors or linear servo motor without thermistor, the setting will be disabled.</td><td>0h</td></tr>
</table></td><td>Refer to Name and function column.</td><td></td></tr>
<tr><td>PD14</td><td>*DOP3</td><td>Function selection D-3
<table>
<tr><th>Setting digit</th><th>Explanation</th><th>Initial value</th></tr>
<tr><td>_ _ _ x</td><td>For manufacturer setting</td><td>0h</td></tr>
<tr><td>_ _ x _</td><td>Selection of output device at warning occurrence
Select WNG (Warning) and ALM (Malfunction) output status at warning occurrence.

Servo amplifier output
<table>
<tr><th>Setting value</th><th>(Note 1) Device status</th></tr>
<tr><td>0</td><td> 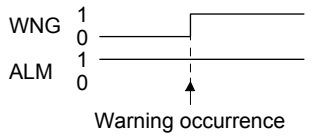
</td></tr>
<tr><td>1</td><td> 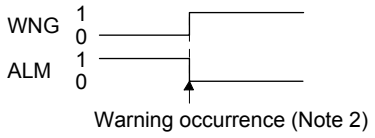
</td></tr>
</table>
Note 1. 0: Off
1: On
2. Although ALM is turned off upon occurrence of the warning, the forced stop deceleration is performed.</td><td>0h</td></tr>
<tr><td>_ x _ _</td><td rowspan="2">For manufacturer setting</td><td>0h</td></tr>
<tr><td>x _ _ _</td><td>0h</td></tr>
</table></td><td>Refer to Name and function column.</td><td></td></tr>
</table>

<table>
<tr><th>No.</th><th>Symbol</th><th>Name and function</th><th>Initial value [unit]</th><th>Setting range</th></tr>
<tr><td>PD15</td><td>*IDCS</td><td>Driver communication setting
This parameter is supported with software version A8 or later. Check the software version using MR Configurator2.
This parameter is used to select master/slave axis for the driver communication.
This is available only when the deceleration to a stop function is disabled. When the deceleration to a stop function is enabled, [AL. 37] will occur.
<table>
<tr><th>Setting digit</th><th>Explanation</th><th>Initial value</th></tr>
<tr><td>_ _ _ x</td><td>Master axis operation selection
Setting "1" other than in standard control mode and fully closed loop control mode will trigger [AL. 37].
0: Disabled (not using master-slave operation function)
1: Enabled (this servo amplifier: master axis)</td><td>0h</td></tr>
<tr><td>_ _ x _</td><td>Slave axis operation selection
Setting "1" other than in standard control mode will trigger [AL. 37].
0: Disabled (not using master-slave operation function)
1: Enabled (this servo amplifier: slave axis)</td><td>0h</td></tr>
<tr><td>_ x _ _</td><td rowspan="2">For manufacturer setting</td><td>0h</td></tr>
<tr><td>x _ _ _</td><td>0h</td></tr>
</table>
<table>
<tr><th colspan="2">Master-slave operation function</th><th>Setting value</th></tr>
<tr><td>Not used</td><td></td><td>0000</td></tr>
<tr><td rowspan="2">Used</td><td>Master</td><td>0001</td></tr>
<tr><td>Slave</td><td>0010</td></tr>
</table></td><td colspan="2">Refer to Name and function column.</td></tr>
<tr><td>PD16</td><td>*MD1</td><td>Driver communication setting - Master - Transmit data selection 1
This parameter is supported with software version A8 or later. Check the software version using MR Configurator2.
This parameter is used to select transmit data from master axis to slave axis.
When setting this amplifier as master axis ([Pr. PD15] is "_ _ 0 1".), select "_ _ 3 8 (torque command)" with this parameter.
<table>
<tr><th>Setting digit</th><th>Explanation</th><th>Initial value</th></tr>
<tr><td>_ _ x x</td><td>Transmission data selection
00: Disabled
38: Torque command</td><td>00h</td></tr>
<tr><td>_ x _ _</td><td rowspan="2">For manufacturer setting</td><td>0h</td></tr>
<tr><td>x _ _ _</td><td>0h</td></tr>
</table></td><td colspan="2">Refer to Name and function column.</td></tr>
<tr><td>PD17</td><td>*MD2</td><td>Driver communication setting - Master - Transmit data selection 2
This parameter is supported with software version A8 or later. Check the software version using MR Configurator2.
This parameter is used to select transmit data from master axis to slave axis.
When setting this amplifier as master axis ([Pr. PD15] is "_ _ 0 1".), select "_ _ 3 A (speed limit command)" with this parameter.
<table>
<tr><th>Setting digit</th><th>Explanation</th><th>Initial value</th></tr>
<tr><td>_ _ x x</td><td>Transmission data selection
00: Disabled
3A: speed limit command</td><td>00h</td></tr>
<tr><td>_ x _ _</td><td rowspan="2">For manufacturer setting</td><td>0h</td></tr>
<tr><td>x _ _ _</td><td>0h</td></tr>
</table></td><td colspan="2">Refer to Name and function column.</td></tr>
</table>

No.	Symbol	Name and function	Initial value [unit]	Setting range
PD20	*SLA1	Driver communication setting - Slave - Master axis No. selection 1 This parameter is supported with software version A8 or later. Check the software version using MR Configurator2. Select a master axis when this amplifier is slave axis. When setting this amplifier as slave axis ([Pr. PD15] is "_ _ 1 0".), set the axis No. of the servo amplifier of master. Refer to section 4.3.1 for details of axis Nos. Setting "0" disables this parameter.	0	0 to 32
PD30	TLC	Master-slave operation - Torque command coefficient on slave This parameter is supported with software version A8 or later. Check the software version using MR Configurator2. This parameter is used to set a internal torque command coefficient to torque command value received from master axis. This parameter is enabled when this amplifier is set as slave axis ([Pr. PD15] is "_ _ 1 0".). The maximum value is 500. Setting over 500 will be 500. Setting 100 [%] means multiplication of one. The torque ratio will be 100 (master) to 100 (slave). Setting 90 [%] means multiplication of 0.9. The torque ratio will be 100 (master) to 90 (slave).	0 [%]	0 to 500
PD31	VLC	Master-slave operation - Speed limit coefficient on slave This parameter is supported with software version A8 or later. Check the software version using MR Configurator2. This parameter is used to set a internal speed limit value coefficient to speed limit command value received from master axis. This parameter is enabled when this amplifier is set as slave axis ([Pr. PD15] is "_ _ 1 0".). The maximum value is 500. Setting over 500 will be 500. Setting 100 [%] means multiplication of one. Setting example: [Pr. PD31 (VLC)] = 140 [%], [Pr. PD32 (VLL)] = 300 [r/min], and master side acceleration/deceleration at 1000 [r/min] 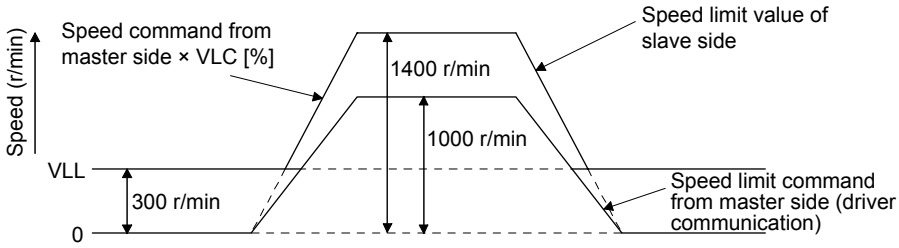 	0 [%]	0 to 500
PD32	VLL	Master-slave operation - Speed limit adjusted value on slave This parameter is supported with software version A8 or later. Check the software version using MR Configurator2. This parameter is used to set a minimum value for internal speed limit value. This parameter is enabled when this amplifier is set as slave axis ([Pr. PD15] is "_ _ 1 0".). The speed limit value will not be this setting value or lower. This parameter ensures torque control range at low speed driving (avoid area likely to reach speed limit). Set 100 to 500 [r/min] normally as a reference. Refer to [Pr. PD31] for the setting example.	0 [r/min]	0 to 32767

5.2.5 Extension setting 2 parameters ([Pr. PE_ _])

<table>
<tr><th>No.</th><th>Symbol</th><th>Name and function</th><th>Initial value [unit]</th><th>Setting range</th></tr>
<tr><td>PE01</td><td>**FCT1</td><td>Fully closed loop function selection 1
<table>
<tr><th>Setting digit</th><th>Explanation</th><th>Initial value</th></tr>
<tr><td>_ _ _ x</td><td>Fully closed loop function selection
0: Always enabled
1: Switching with the control command of controller (switching semi./full.)
<table>
<tr><th>Switching with the control command of controller</th><th>Control method</th></tr>
<tr><td>Off</td><td>Semi closed loop control</td></tr>
<tr><td>On</td><td>Fully closed loop control</td></tr>
</table>
To enable the digit, select "Fully closed loop control mode (_ _ 1 _)" of "operation mode selection" in [Pr. PA01].</td><td>0h</td></tr>
<tr><td>_ _ x _</td><td rowspan="3">For manufacturer setting</td><td>0h</td></tr>
<tr><td>_ x _ _</td><td>0h</td></tr>
<tr><td>x _ _ _</td><td>0h</td></tr>
</table></td><td colspan="2">Refer to Name and function column.</td></tr>
<tr><td>PE03</td><td>*FCT2</td><td>Fully closed loop function selection 2
<table>
<tr><th>Setting digit</th><th>Explanation</th><th>Initial value</th></tr>
<tr><td>_ _ _ x</td><td>Fully closed loop control error detection function selection
0: Disabled
1: Speed deviation error detection
2: Position deviation error detection
3: Speed deviation error/position deviation error detection</td><td>3h</td></tr>
<tr><td>_ _ x _</td><td>Position deviation error detection system selection
0: Continuous detection system
1: Detection system at stop (detected with command set to "0")</td><td>0h</td></tr>
<tr><td>_ x _ _</td><td>For manufacturer setting</td><td>0h</td></tr>
<tr><td>x _ _ _</td><td>Fully closed loop control error reset selection
0: Reset disabled (reset by powering off/on enabled)
1: Reset enabled</td><td>0h</td></tr>
</table></td><td colspan="2">Refer to Name and function column.</td></tr>
<tr><td>PE04</td><td>**FBN</td><td>Fully closed loop control - Feedback pulse electronic gear 1 - Numerator
This is used to set a numerator of electronic gear for the servo motor encoder pulse at the fully closed loop control.
Set the electronic gear so that the number of servo motor encoder pulses for one servo motor revolution is converted to the resolution of the load-side encoder.</td><td>1</td><td>1 to 65535</td></tr>
<tr><td>PE05</td><td>**FBD</td><td>Fully closed loop control - Feedback pulse electronic gear 1 - Denominator
This is used to set a denominator of electronic gear for the servo motor encoder pulse at the fully closed loop control.
Set the electronic gear so that the number of servo motor encoder pulses for one servo motor revolution is converted to the resolution of the load-side encoder.</td><td>1</td><td>1 to 65535</td></tr>
<tr><td>PE06</td><td>BC1</td><td>Fully closed loop control - Speed deviation error detection level
This is used to set [AL. 42.9 Fully closed loop control error by speed deviation] of the fully closed loop control error detection.
When the speed deviation between the servo motor encoder and load-side encoder becomes larger than the setting value, the alarm will occur.</td><td>400 [r/min]</td><td>1 to 50000</td></tr>
<tr><td>PE07</td><td>BC2</td><td>Fully closed loop control - Position deviation error detection level
This is used to set [AL. 42.8 Fully closed loop control error by position deviation] of the fully closed loop control error detection.
When the position deviation between the servo motor encoder and load-side encoder becomes larger than the setting value, the alarm will occur.</td><td>100 [kpulse]</td><td>1 to 20000</td></tr>
</table>

<table>
<tr><th>No.</th><th>Symbol</th><th>Name and function</th><th>Initial value [unit]</th><th>Setting range</th></tr>
<tr><td>PE08</td><td>DUF</td><td>Fully closed loop dual feedback filter
This is used to set a dual feedback filter band.
Refer to section 16.3.1 (7) for details.</td><td>10
[rad/s]</td><td>0 to
4500</td></tr>
<tr><td>PE10</td><td>FCT3</td><td>Fully closed loop function selection 3
<table>
<tr><th>Setting digit</th><th>Explanation</th><th>Initial value</th></tr>
<tr><td>_ _ _ x</td><td>For manufacturer setting</td><td>0h</td></tr>
<tr><td>_ _ x _</td><td>Fully closed loop control - Position deviation error detection level - Unit selection
0: 1 kplulse unit
1: 1 pulse unit</td><td>0h</td></tr>
<tr><td>_ x _ _</td><td>Droop pulse monitor selection for controller display
0: Servo motor encoder
1: Load-side encoder
2: Deviation between the servo motor and load side</td><td>0h</td></tr>
<tr><td>x _ _ _</td><td>Cumulative feedback pulses monitor selection for controller display
0: Servo motor encoder
1: Load-side encoder
The setting of this digit is used for the fully closed loop system and scale measurement function.</td><td>0h</td></tr>
</table></td><td colspan="2">Refer to Name and function column.</td></tr>
<tr><td>PE34</td><td>**FBN2</td><td>Fully closed loop control - Feedback pulse electronic gear 2 - Numerator
This is used to set a numerator of electronic gear for the servo motor encoder pulse at the fully closed loop control.
Set the electronic gear so that the number of servo motor encoder pulses for one servo motor revolution is converted to the resolution of the load-side encoder.
Refer to section 16.3.1 (5) for details.</td><td>1</td><td>1 to
65535</td></tr>
<tr><td>PE35</td><td>**FBD2</td><td>Fully closed loop control - Feedback pulse electronic gear 2 - Denominator
This is used to set a denominator of electronic gear for the servo motor encoder pulse at the fully closed loop control.
Set the electronic gear so that the number of servo motor encoder pulses for one servo motor revolution is converted to the resolution of the load-side encoder.
Refer to section 16.3.1 (5) for details.</td><td>1</td><td>1 to
65535</td></tr>
<tr><td>PE41</td><td>EOP3</td><td>Function selection E-3
<table>
<tr><th>Setting digit</th><th>Explanation</th><th>Initial value</th></tr>
<tr><td>_ _ _ x</td><td>Robust filter selection
0: Disabled
1: Enabled
When you select "Enabled" of this digit, the machine resonance suppression filter 5 set in [Pr. PB51] is not available.</td><td>0h</td></tr>
<tr><td>_ _ x _</td><td rowspan="3">For manufacturer setting</td><td>0h</td></tr>
<tr><td>_ x _ _</td><td>0h</td></tr>
<tr><td>x _ _ _</td><td>0h</td></tr>
</table></td><td colspan="2">Refer to Name and function column.</td></tr>
</table>

5.2.6 Extension setting 3 parameters ([Pr. PF_ _])

<table>
<tr><th>No.</th><th>Symbol</th><th>Name and function</th><th>Initial value [unit]</th><th>Setting range</th></tr>
<tr><td>PF06</td><td>*FOP5</td><td>Function selection F-5
<table>
<tr><th>Setting digit</th><th>Explanation</th><th>Initial value</th></tr>
<tr><td>_ _ _ x</td><td>Electronic dynamic brake selection
0: Automatic (enabled only for specified servo motors)
2: Disabled
Refer to the following table for the specified servo motors.
<table>
<tr><th>Series</th><th>Servo motor</th></tr>
<tr><td>HG-KR</td><td>HG-KR053/HG-KR13/HG-KR23/HG-KR43</td></tr>
<tr><td>HG-MR</td><td>HG-MR053/HG-MR13/HG-MR23/HG-MR43</td></tr>
<tr><td>HG-SR</td><td>HG-SR51/HG-SR52</td></tr>
</table></td><td>0h</td></tr>
<tr><td>_ _ x _</td><td rowspan="3">For manufacturer setting</td><td>0h</td></tr>
<tr><td>_ x _ _</td><td>0h</td></tr>
<tr><td>x _ _ _</td><td>0h</td></tr>
</table></td><td colspan="2">Refer to Name and function column.</td></tr>
<tr><td>PF12</td><td>DBT</td><td>Electronic dynamic brake operating time
Set a operating time for the electronic dynamic brake.</td><td>2000
[ms]</td><td>0 to 10000</td></tr>
<tr><td>PF21</td><td>DRT</td><td>Drive recorder switching time setting
This is used to set a drive recorder switching time.
When a USB communication is cut during using a graph function, the function will be changed to the drive recorder function after the settling time of this parameter.
When a value from "1" to "32767" is set, it will switch after the setting value.
However, when "0" is set, it will switch after 600 s.
When "-1" is set, the drive recorder function is disabled.</td><td>0
[s]</td><td>-1 to 32767</td></tr>
<tr><td>PF23</td><td>OSCL1</td><td>Vibration tough drive - Oscillation detection level
This is used to set a filter readjustment sensitivity of [Pr. PB13 Machine resonance suppression filter 1] and [Pr. PB15 Machine resonance suppression filter 2] while the vibration tough drive is enabled.
However, setting "0" will be 50%.
Example: When you set "50" to the parameter, the filter will be readjusted at the time of 50% or more oscillation level.</td><td>50
[%]</td><td>0 to 100</td></tr>
<tr><td>PF24</td><td>*OSCL2</td><td>Vibration tough drive function selection
<table>
<tr><th>Setting digit</th><th>Explanation</th><th>Initial value</th></tr>
<tr><td>_ _ _ x</td><td>Oscillation detection alarm selection
0: [AL. 54 Oscillation detection] will occur at oscillation detection.
1: [AL. F3.1 Oscillation detection warning] will occur at oscillation detection.
2: Oscillation detection function disabled
Select alarm or warning when a oscillation continues at a filter readjustment sensitivity level of [Pr. PF23].
The digit is continuously enabled regardless of the vibration tough drive in [Pr. PA20].</td><td>0h</td></tr>
<tr><td>_ _ x _</td><td rowspan="3">For manufacturer setting</td><td>0h</td></tr>
<tr><td>_ x _ _</td><td>0h</td></tr>
<tr><td>x _ _ _</td><td>0h</td></tr>
</table></td><td colspan="2">Refer to Name and function column.</td></tr>
<tr><td>PF25</td><td>CVAT</td><td>SEMI-F47 function - Instantaneous power failure detection time
Set the time of the [AL. 10.1 Voltage drop in the control circuit power] occurrence.
To disable the parameter, select "Disabled (_ 0 _ _)" of "SEMI-F47 function selection" in [Pr. PA20].</td><td>200
[ms]</td><td>30 to 200</td></tr>
</table>

No.	Symbol	Name and function	Initial value [unit]	Setting range
PF31	FRIC	Machine diagnosis function - Friction judgement speed Set a (linear) servo motor speed to divide a friction estimation area into high and low for the friction estimation process of the machine diagnosis. However, setting "0" will be the value half of the rated speed. When your operation pattern is under rated speed, we recommend that you set half value to the maximum speed with this. 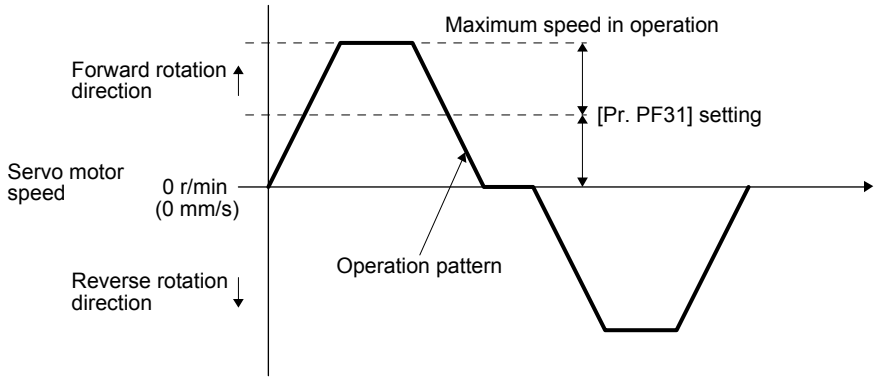 	0 [r/min]/ [mm/s]	0 to permiss -ible speed

5.2.7 Linear servo motor/DD motor setting parameters ([Pr. PL_ _])

No.	Symbol	Name and function	Initial value [unit]	Setting range
PL01	**LIT1	Linear servo motor/DD motor function selection 1 Select a magnetic pole detection timing of the linear servo motor/DD motor and stop interval of the home position returning. Setting digit / Explanation / Initial value _ _ _ x: Linear servo motor/DD motor magnetic pole detection selection (1h) The setting value "0" will be enabled only with absolute position linear encoders. 0: Magnetic pole detection disabled 1: Magnetic pole detection at first servo-on 5: Magnetic pole detection at every servo-on _ _ x _: For manufacturer setting (0h) _ x _ _: Stop interval selection at the home position return (3h) Set a stop interval of the home position returning. The digit is enabled only for linear servo motors. 0: 2^{13} (= 8192) pulses 1: 2^{17} (= 131072) pulses 2: 2^{18} (= 262144) pulses 3: 2^{20} (= 1048576) pulses 4: 2^{22} (= 4194304) pulses 5: 2^{24} (= 16777216) pulses 6: 2^{26} (= 67108864) pulses x _ _ _: For manufacturer setting (0h)	Refer to Name and function column.	
PL02	**LIM	Linear encoder resolution - Numerator Set a linear encoder resolution per μm in [Pr. PL02] and [Pr. PL03]. Set the numerator in [Pr. PL02]. This is enabled only for linear servo motors.	1000 [μm]	1 to 65535
PL03	**LID	Linear encoder resolution - Denominator Set a linear encoder resolution per μm in [Pr. PL02] and [Pr. PL03]. Set the denominator in [Pr. PL03]. This is enabled only for linear servo motors.	1000 [μm]	1 to 65535

<table>
<tr><th>No.</th><th>Symbol</th><th>Name and function</th><th>Initial value [unit]</th><th>Setting range</th></tr>
<tr><td>PL04</td><td>*LIT2</td><td>Linear servo motor/DD motor function selection 2
This is used to select a detection function and detection controller reset condition of [AL. 42 Servo control error].
<table>
<tr><th>Setting digit</th><th>Explanation</th><th>Initial value</th></tr>
<tr><td>_ _ _ x</td><td>[AL. 42 Servo control error] detection function selection
Refer to the following table.
<table>
<tr><th>Setting value</th><th>Torque/thrust deviation error (Note)</th><th>Speed deviation error (Note)</th><th>Position deviation error (Note)</th></tr>
<tr><td>0</td><td rowspan="4">Disabled</td><td rowspan="2">Disabled</td><td>Disabled</td></tr>
<tr><td>1</td><td>Enabled</td></tr>
<tr><td>2</td><td rowspan="2">Enabled</td><td>Disabled</td></tr>
<tr><td>3</td><td>Enabled</td></tr>
<tr><td>4</td><td rowspan="4">Enabled</td><td rowspan="2">Disabled</td><td>Disabled</td></tr>
<tr><td>5</td><td>Enabled</td></tr>
<tr><td>6</td><td rowspan="2">Enabled</td><td>Disabled</td></tr>
<tr><td>7</td><td>Enabled</td></tr>
</table>
Note. Refer to chapter 14 and 15 for details of each deviation error.</td><td>3h</td></tr>
<tr><td>_ _ x _</td><td rowspan="2">For manufacturer setting</td><td>0h</td></tr>
<tr><td>_ x _ _</td><td>0h</td></tr>
<tr><td>x _ _ _</td><td>[AL. 42 Servo control error] detection function controller reset condition selection
0: Reset disabled (reset by powering off/on enabled)
1: Reset enabled</td><td>0h</td></tr>
</table></td><td>Refer to Name and function column.</td><td></td></tr>
<tr><td>PL05</td><td>LB1</td><td>Position deviation error detection level
This is used to set the position deviation error detection level of the servo control error detection.
When the deviation between a model feedback position and actual feedback position is larger than the setting value, [AL. 42 Servo control error] will occur.
However, when "0" is set, the level vary depending on the operation mode in [Pr. PA01].
Linear servo motor: 50 mm
Direct drive motor: 0.09 rev</td><td>0 [mm]/ [0.01rev]</td><td>0 to 1000</td></tr>
<tr><td>PL06</td><td>LB2</td><td>Speed deviation error detection level
This is used to set the speed deviation error detection level of the servo control error detection.
When the deviation between a model feedback speed and actual feedback speed is larger than the setting value, [AL. 42 Servo control error] will occur.
However, when "0" is set, the level vary depending on the operation mode in [Pr. PA01].
Linear servo motor: 1000 mm/s
Direct drive motor: 100 r/min</td><td>0 [mm/s]/ [r/min]</td><td>0 to 5000</td></tr>
<tr><td>PL07</td><td>LB3</td><td>Torque/thrust deviation error detection level
This is used to set the torque/thrust deviation error detection level of the servo control error detection.
When the deviation between a current command and current feedback is larger than the setting value, [AL. 42.3 Servo control error by torque/thrust deviation] will occur.</td><td>100 [%]</td><td>0 to 1000</td></tr>
<tr><td>PL08</td><td>*LIT3</td><td>Linear servo motor/DD motor function selection 3
<table>
<tr><th>Setting digit</th><th>Explanation</th><th>Initial value</th></tr>
<tr><td>_ _ _ x</td><td>Magnetic pole detection method selection
0: Position detection method
4: Minute position detection method</td><td>0h</td></tr>
<tr><td>_ _ x _</td><td>For manufacturer setting</td><td>1h</td></tr>
<tr><td>_ x _ _</td><td>Magnetic pole detection - Stroke limit enabled/disabled selection
0: Enabled
1: Disabled</td><td>0h</td></tr>
<tr><td>x _ _ _</td><td>For manufacturer setting</td><td>0h</td></tr>
</table></td><td>Refer to Name and function column.</td><td></td></tr>
</table>

<table>
<tr><th>No.</th><th>Symbol</th><th>Name and function</th><th>Initial value [unit]</th><th>Setting range</th></tr>
<tr><td>PL09</td><td>LPWM</td><td>Magnetic pole detection voltage level
This is used to set a direct current exciting voltage level during the magnetic pole detection.
If [AL. 32 Overcurrent], [AL. 50 Overload 1], or [AL. 51 Overload 2] occurs during the magnetic pole detection, decrease the setting value.
If [AL. 27 Initial magnetic pole detection error] occurs during the magnetic pole detection, increase the setting value.</td><td>30
[%]</td><td>0 to 100</td></tr>
<tr><td>PL17</td><td>LTSTS</td><td>Magnetic pole detection - Minute position detection method - Function selection
To enable the parameter, select "Minute position detection method (_ _ _ 4)" in [Pr. PL08].
<table>
<tr><th>Setting digit</th><th>Explanation</th><th>Initial value</th></tr>
<tr><td>_ _ _ x</td><td>Response selection
Set a response of the minute position detection method.
When reducing a travel distance at the magnetic pole detection, increase the setting value. Refer to table 5.9 for settings.</td><td>0h</td></tr>
<tr><td>_ _ x _</td><td>Load to motor mass ratio/load to motor inertia ratio selection
Select a load to mass of the linear servo motor primary-side ratio or load to mass of the direct drive motor inertia ratio used at the minute position detection method. Set a closest value to the actual load.
Refer to table 5.10 for settings.</td><td>0h</td></tr>
<tr><td>_ x _ _</td><td rowspan="2">For manufacturer setting</td><td>0h</td></tr>
<tr><td>x _ _ _</td><td>0h</td></tr>
</table>
Table 5.9 Response of minute position detection method at magnetic pole detection
<table>
<tr><th>Setting value</th><th>Response</th><th>Setting value</th><th>Response</th></tr>
<tr><td>0</td><td>Low response</td><td>8</td><td>Middle response</td></tr>
<tr><td>1</td><td rowspan="6">↕</td><td>9</td><td rowspan="6">↕</td></tr>
<tr><td>2</td><td>A</td></tr>
<tr><td>3</td><td>B</td></tr>
<tr><td>4</td><td>C</td></tr>
<tr><td>5</td><td>D</td></tr>
<tr><td>6</td><td>E</td></tr>
<tr><td>7</td><td>Middle response</td><td>F</td><td>High response</td></tr>
</table>
Table 5.10 Load to motor mass ratio/load to motor inertia ratio
<table>
<tr><th>Setting value</th><th>Load to motor mass ratio/load to motor inertia ratio</th><th>Setting value</th><th>Load to motor mass ratio/load to motor inertia ratio</th></tr>
<tr><td>0</td><td>10 times or less</td><td>8</td><td>80 times</td></tr>
<tr><td>1</td><td>10 times</td><td>9</td><td>90 times</td></tr>
<tr><td>2</td><td>20 times</td><td>A</td><td>100 times</td></tr>
<tr><td>3</td><td>30 times</td><td>B</td><td>110 times</td></tr>
<tr><td>4</td><td>40 times</td><td>C</td><td>120 times</td></tr>
<tr><td>5</td><td>50 times</td><td>D</td><td>130 times</td></tr>
<tr><td>6</td><td>60 times</td><td>E</td><td>140 times</td></tr>
<tr><td>7</td><td>70 times</td><td>F</td><td>150 times or more</td></tr>
</table></td><td>Refer to Name and function column.</td><td></td></tr>
<tr><td>PL18</td><td>IDLV</td><td>Magnetic pole detection - Minute position detection method - Identification signal amplitude
Set an identification signal amplitude used in the minute position detection method.
This parameter is enabled only when the magnetic pole detection is the minute position detection method.
However, setting "0" will be 100% amplitude.</td><td>0
[%]</td><td>0 to 100</td></tr>
</table>

6. NORMAL GAIN ADJUSTMENT

POINT

- In the torque control mode, you do not need to make gain adjustment.
- Before making gain adjustment, check that your machine is not being operated at maximum torque of the servo motor. If operated over maximum torque, the machine may vibrate and may operate unexpectedly. In addition, make gain adjustment with a safety margin considering characteristic differences of each machine. It is recommended that generated torque during operation is under 90% of the maximum torque of the servo motor.
- When you use a linear servo motor, replace the following left words to the right words.

Load to motor inertia ratio	→	Load to motor mass ratio
Torque	→	Thrust
(Servo motor) speed	→	(Linear servo motor) speed

6.1 Different adjustment methods

6.1.1 Adjustment on a single servo amplifier

The following table shows the gain adjustment modes that can be set on a single servo amplifier. For gain adjustment, first execute "Auto tuning mode 1". If you are not satisfied with the result of the adjustment, execute "Auto tuning mode 2" and "Manual mode" in this order.

(1) Gain adjustment mode explanation

Gain adjustment mode	[Pr. PA08] setting	Estimation of load to motor inertia ratio	Automatically set parameters	Manually set parameters
Auto tuning mode 1 (initial value)	_ _ _ 1	Always estimated	GD2 ([Pr. PB06]) PG1 ([Pr. PB07]) PG2 ([Pr. PB08]) VG2 ([Pr. PB09]) VIC ([Pr. PB10])	RSP ([Pr. PA09])
Auto tuning mode 2	_ _ _ 2	Fixed to [Pr. PB06] value	PG1 ([Pr. PB07]) PG2 ([Pr. PB08]) VG2 ([Pr. PB09]) VIC ([Pr. PB10])	GD2 ([Pr. PB06]) RSP ([Pr. PA09])
Manual mode	_ _ _ 3			GD2 ([Pr. PB06]) PG1 ([Pr. PB07]) PG2 ([Pr. PB08]) VG2 ([Pr. PB09]) VIC ([Pr. PB10])
2 gain adjustment mode 1 (interpolation mode)	_ _ _ 0	Always estimated	GD2 ([Pr. PB06]) PG2 ([Pr. PB08]) VG2 ([Pr. PB09]) VIC ([Pr. PB10])	PG1 ([Pr. PB07]) RSP ([Pr. PA09])
2 gain adjustment mode 2	_ _ _ 4	Fixed to [Pr. PB06] value	PG2 ([Pr. PB08]) VG2 ([Pr. PB09]) VIC ([Pr. PB10])	GD2 ([Pr. PB06]) PG1 ([Pr. PB07]) RSP ([Pr. PA09])

(2) Adjustment sequence and mode usage

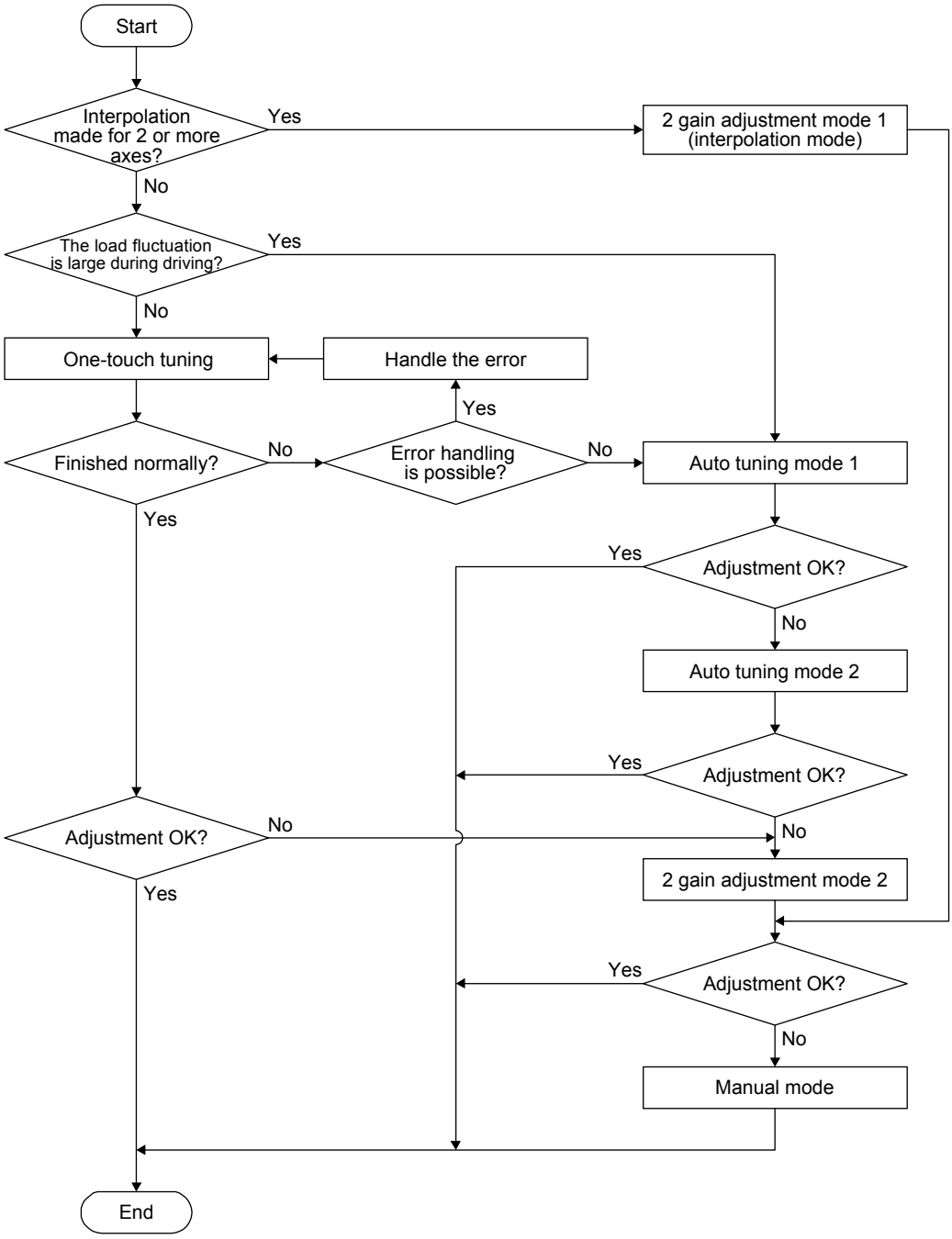

6.1.2 Adjustment using MR Configurator2

This section explains the functions and adjustment using the servo amplifier with MR Configurator2.

Function	Description	Adjustment
Machine analyzer	With the machine and servo motor coupled, the characteristic of the mechanical system can be measured by giving a random vibration command from a personal computer to the servo and measuring the machine response.	You can grasp the machine resonance frequency and determine the notch frequency of the machine resonance suppression filter.

6.2 One-touch tuning

> **POINT**
>
> ●When executing the one-touch tuning, check the [Pr. PA21 One-touch tuning function selection] is "_ _ _ 1" (initial value).

Connect Mr Configurator2 and open the one-touch tuning window, and you can use the function. The following parameters are set automatically with one-touch tuning.

Table 6.1 List of parameters automatically set with one-touch tuning

Parameter	Symbol	Name
PA08	ATU	Auto tuning mode
PA09	RSP	Auto tuning response
PB01	FILT	Adaptive tuning mode (adaptive filter II)
PB02	VRFT	Vibration suppression control tuning mode (advanced vibration suppression control II)
PB06	GD2	Load to motor inertia ratio/load to motor mass ratio
PB07	PG1	Model loop gain
PB08	PG2	Position loop gain
PB09	VG2	Speed loop gain
PB10	VIC	Speed integral compensation
PB12	OVA	Overshoot amount compensation
PB13	NH1	Machine resonance suppression filter 1
PB14	NHQ1	Notch shape selection 1
PB15	NH2	Machine resonance suppression filter 2

Parameter	Symbol	Name
PB16	NHQ2	Notch shape selection 2
PB18	LPF	Low-pass filter setting
PB19	VRF11	Vibration suppression control 1 - Vibration frequency
PB20	VRF12	Vibration suppression control 1 - Resonance frequency
PB21	VRF13	Vibration suppression control 1 - Vibration frequency damping
PB22	VRF14	Vibration suppression control 1 - Resonance frequency damping
PB23	VFBF	Low-pass filter selection
PB47	NHQ3	Notch shape selection 3
PB48	NH4	Machine resonance suppression filter 4
PB49	NHQ4	Notch shape selection 4
PB51	NHQ5	Notch shape selection 5
PE41	EOP3	Function selection E-3

6.2.1 One-touch tuning flowchart

Make one-touch tuning as follows.

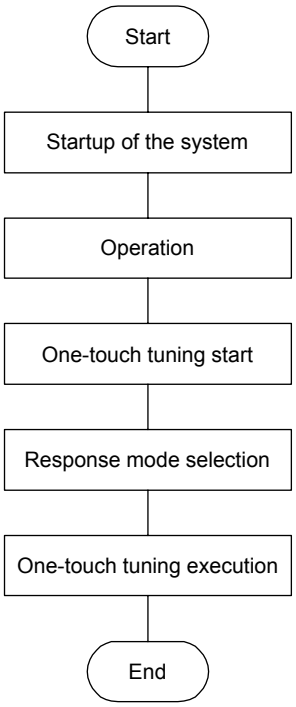

Startup a system referring to chapter 4.

Rotate the servo motor by an external controller, etc. (The one-touch tuning cannot be performed if the servo motor is not operating.)

Start one-touch tuning of MR Configurator2.

Select a response mode (high mode, basic mode, and low mode) in the one-touch tuning window of MR Configurator2.

Push the start button to start one-touch tuning. Push it during servo motor driving.
When one-touch tuning is completed normally, the parameters described in table 6.1 will be set automatically.

6.2.2 Display transition and operation procedure of one-touch tuning

(1) Response mode selection

Select a response mode from 3 modes in the one-touch tuning window of MR Configurator2.

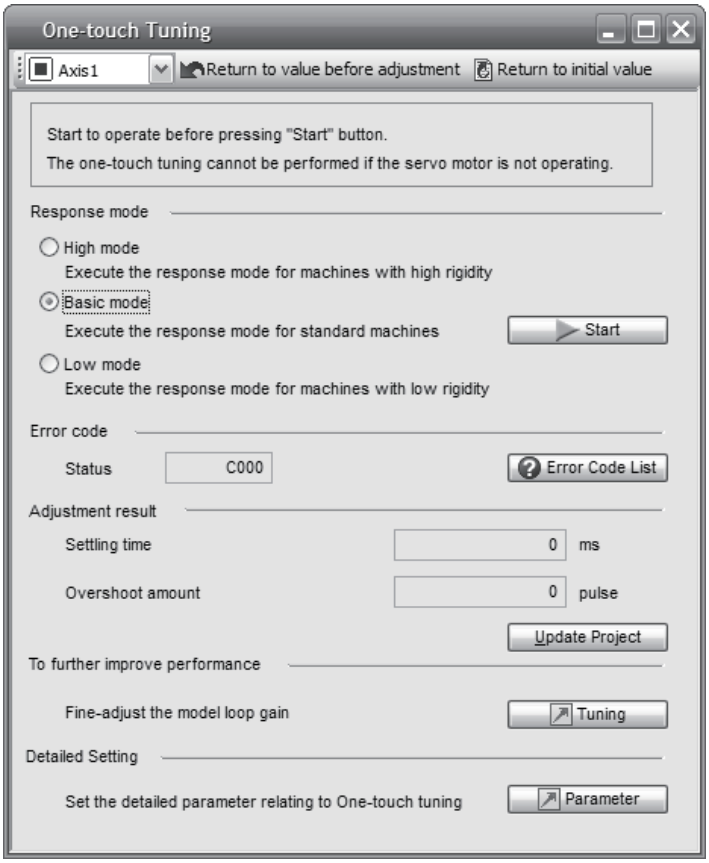

Response mode	Explanation
High mode	This mode is for high rigid system.
Basic mode	This mode is for standard system.
Low mode	This mode is for low rigid system.

Refer to the following table for selecting a response mode.

Response mode			Response	Machine characteristic
Low mode	Basic mode	High mode		Guideline of corresponding machine
↕	↕	↕	Low response ↕ High response	Arm robot General machine tool conveyor Precision working machine Inserter Mounter Bonder

POINT

●For equipment in which overshoot during one-touch tuning is in the permissible level of the in-position range, changing the value of [Pr. PA25 One-touch tuning - Overshoot permissible level] will shorten the settling time and improve the response.

(2) One-touch tuning execution

After the response mode is selected in (1), pushing the start button during driving will start one-touch tuning. If the start button is pushed while the servo motor stops, "C 0 0 2" or "C 0 0 4" will be displayed at status in error code. (Refer to (4) in this section for error codes.)

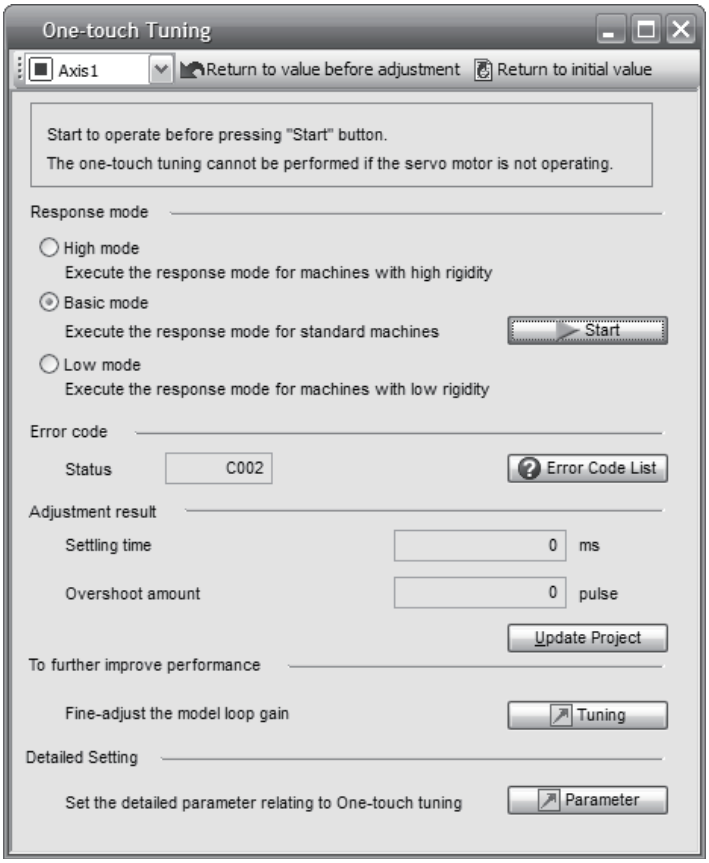

During processing of one-touch tuning, the status will be displayed in the progress window as follows. One-touch tuning will be finished at 100%.

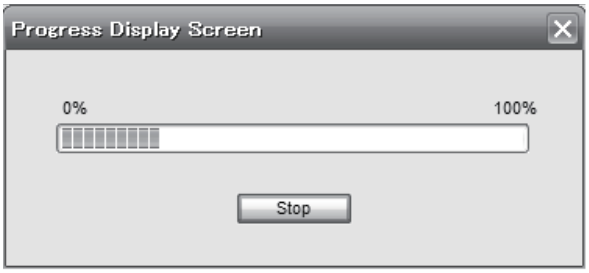

Completing the one-touch tuning starts writing tuning parameters to the servo amplifier. "0 0 0 0" is displayed at status in error code. In addition, settling time and overshoot amount will be displayed in "Adjustment result" after adjustment.

(3) One-touch tuning execution

During one-touch tuning, pushing the stop button stops one-touch tuning.

If the one-touch tuning is stopped, "C 0 0 0" will be displayed at status in error code.

(4) If an error occur

If a tuning error occurs during tuning, one-touch tuning will be forcibly terminated. With that, the following error code will be displayed in status. Check the cause of tuning error.

Error code	Name	Description	Action
C000	Tuning canceled	The stop button was pushed during one-touch tuning.	
C001	Overshoot exceeded	The overshoot amount is lager than the value set in [Pr. PA10 In-position range].	Increase the in-position range.
C002	Servo-off during tuning	The one-touch tuning was attempted during servo-off.	Perform the one-touch tuning after servo-on.
C003	Control mode error	The one-touch tuning was attempted while the torque control mode was selected in the control modes.	Select the position control mode or speed control mode for the control mode from the controller, and then make one-touch tuning.
C004	Time-out	1. 1 cycle time during the operation has been over 30 s.	Set the 1 cycle time during the operation to 30 s or less.
		2. The command speed is low.	Set the servo motor speed to100 r/min or higher.
		3. The operation interval of the continuous operation is short.	Maintain the operation interval during motor driving about 200 ms.
C005	Load to motor inertia ratio misestimated	1. The estimation of the load to motor inertia ratio at one-touch tuning was a failure.	Drive the motor with meeting conditions as follows. ・The acceleration/deceleration time constant to reach 2000 r/min (mm/s) is 5 s or less. ・Speed is 150 r/min (mm/s) or higher. ・The load to servo motor (mass of linear servo motor's primary side or direct drive motor) inertia ratio is 100 times or less. ・The acceleration/deceleration torque is 10% or more of the rated torque.
		2. The load to motor inertia ratio was not estimated due to such as an oscillation.	Set to the auto tuning mode that does not estimate the load to motor inertia ratio as follows, and then execute the one-touch tuning. ・Select "Auto tuning mode 2 (_ _ _ 2)", "Manual mode (_ _ _ 3)", or "2 gain adjustment mode 2 (_ _ _ 4)" of "Gain adjustment mode selection" in [Pr. PA08]. ・Set [Pr. PB06 Load to motor inertia ratio/load to motor mass ratio] properly with manual setting.
C00F	One-touch tuning disabled	"One-touch tuning function selection" in [Pr. PA21] is "Disabled (_ _ _ 0)"	Select "Enabled (_ _ _ 1)".

(5) If an alarm occur

If an alarm occurs during tuning, one-touch tuning will be forcibly terminated.

Remove the cause of the alarm and execute one-touch tuning again.

(6) If a warning occur

If a warning which continue the motor driving occurs during the tuning, one-touch tuning will be continued.

If a warning which does not continue the motor driving occurs during the tuning, one-touch tuning will be stopped.

(7) Clearing one-touch tuning

You can clear the parameter values set with one-touch tuning.
Refer to table 6.1 for the parameters which you can clear.
Pushing "Return to value before adjustment" in the one-touch tuning window of MR Configurator2 enables to rewrite the parameter to the value before pushing the start button.
In addition, pushing "Return to initial value" in the one-touch tuning window enables to rewrite the parameter to the initial value.

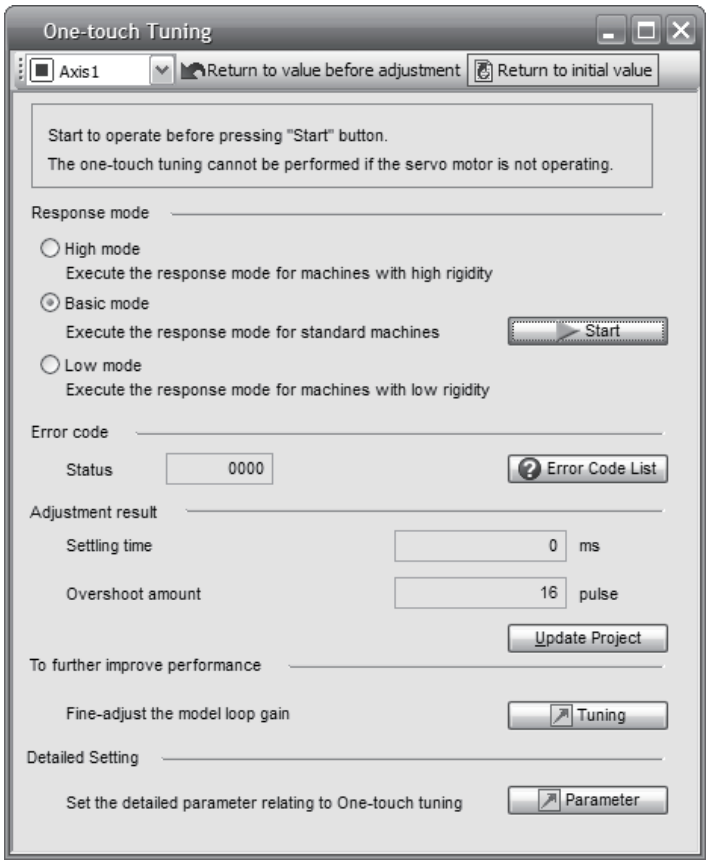

Clearing one-touch tuning is completed, the following window will be displayed. (returning to initial value)

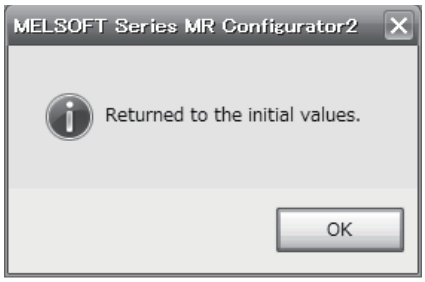

6.2.3 Caution for one-touch tuning

(1) The tuning is not available in the torque control mode.

(2) The one-touch tuning cannot be executed while an alarm or warning which does not continue the motor driving is occurring.

(3) The tuning is not available during the following test operation mode.

(a) Output signal (DO) forced output

(b) Motor-less operation

6.3 Auto tuning

6.3.1 Auto tuning mode

The servo amplifier has a real-time auto tuning function which estimates the machine characteristic (load to motor inertia ratio) in real time and automatically sets the optimum gains according to that value. This function permits ease of gain adjustment of the servo amplifier.

(1) Auto tuning mode 1
The servo amplifier is factory-set to the auto tuning mode 1.
In this mode, the load to motor inertia ratio of a machine is always estimated to set the optimum gains automatically.
The following parameters are automatically adjusted in the auto tuning mode 1.

Parameter	Symbol	Name
PB06	GD2	Load to motor inertia ratio/load to motor mass ratio
PB07	PG1	Model loop gain
PB08	PG2	Position loop gain
PB09	VG2	Speed loop gain
PB10	VIC	Speed integral compensation

POINT

●The auto tuning mode 1 may not be performed properly if all of the following conditions are not satisfied.
- The acceleration/deceleration time constant to reach 2000 r/min (mm/s) is 5 s or less.
- Speed is 150 r/min (mm/s) or higher.
- The load to servo motor (mass of linear servo motor's primary side or direct drive motor) inertia ratio is 100 times or less.
- The acceleration/deceleration torque is 10% or more of the rated torque.

●Under operating conditions which will impose sudden disturbance torque during acceleration/deceleration or on a machine which is extremely loose, auto tuning may not function properly, either. In such cases, use the auto tuning mode 2 or manual mode to make gain adjustment.

(2) Auto tuning mode 2
Use the auto tuning mode 2 when proper gain adjustment cannot be made by auto tuning mode 1. Since the load to motor inertia ratio is not estimated in this mode, set the value of a correct load to motor inertia ratio in [Pr. PB06].
The following parameters are automatically adjusted in the auto tuning mode 2.

Parameter	Symbol	Name
PB07	PG1	Model loop gain
PB08	PG2	Position loop gain
PB09	VG2	Speed loop gain
PB10	VIC	Speed integral compensation

6.3.2 Auto tuning mode basis

The block diagram of real-time auto tuning is shown below.

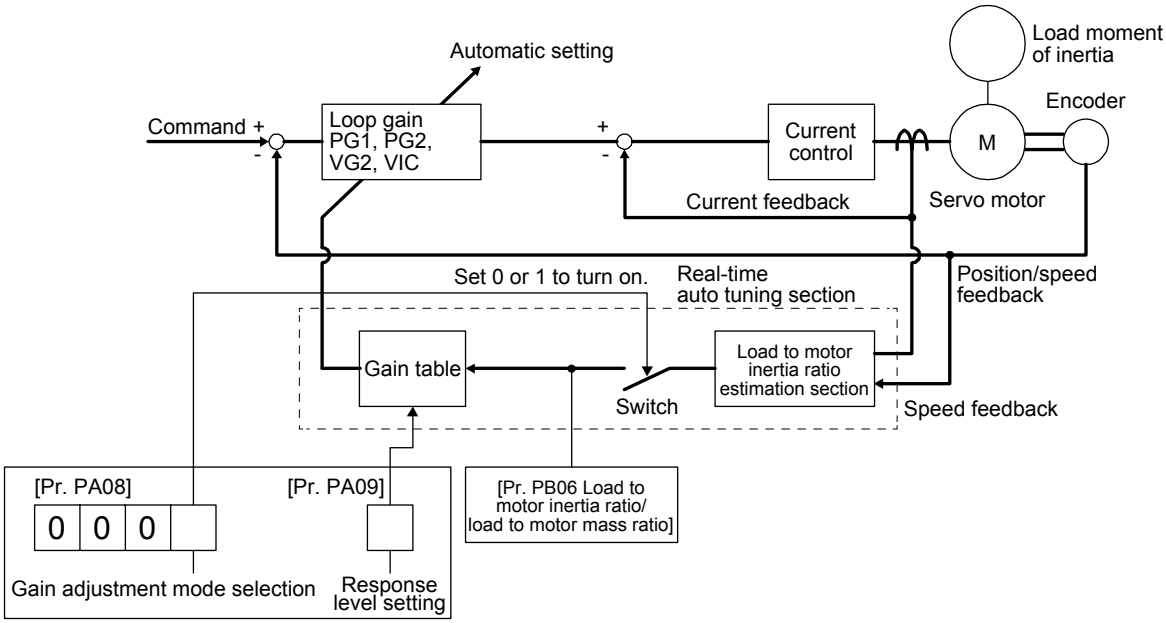

When a servo motor is accelerated/decelerated, the load to motor inertia ratio estimation section always estimates the load to motor inertia ratio from the current and speed of the servo motor. The results of estimation are written to [Pr. PB06 Load to motor inertia ratio/load to motor mass ratio]. These results can be confirmed on the status display screen of the MR Configurator2.
If you have already known the value of the load to motor inertia ratio or failed to estimate, set "Gain adjustment mode selection" to "Auto tuning mode 2 (_ _ _ 2)" in [Pr. PA08] to stop the estimation (turning off the switch in above diagram), and set the load to motor inertia ratio or load to motor mass ratio ([Pr. PB06]) manually.
From the preset load to motor inertia ratio ([Pr. PB06]) value and response ([Pr. PA09]), the optimum loop gains are automatically set on the basis of the internal gain table.
The auto tuning results are saved in the EEP-ROM of the servo amplifier every 60 minutes since power-on. At power-on, auto tuning is performed with the value of each loop gain saved in the EEP-ROM being used as an initial value.

POINT

- If sudden disturbance torque is imposed during operation, the load to motor inertia ratio may be misestimated temporarily. In such a case, set "Gain adjustment mode selection" to "Auto tuning mode 2 (_ _ _ 2)" in [Pr. PA08] and then set the correct load to motor inertia ratio in [Pr. PB06].
- When any of the auto tuning mode 1 and auto tuning mode settings is changed to the manual mode 2 setting, the current loop gains and load to motor inertia ratio estimation value are saved in the EEP-ROM.

6.3.3 Adjustment procedure by auto tuning

Since auto tuning is enabled before shipment from the factory, simply running the servo motor automatically sets the optimum gains that match the machine. Merely changing the response level setting value as required completes the adjustment. The adjustment procedure is as follows.

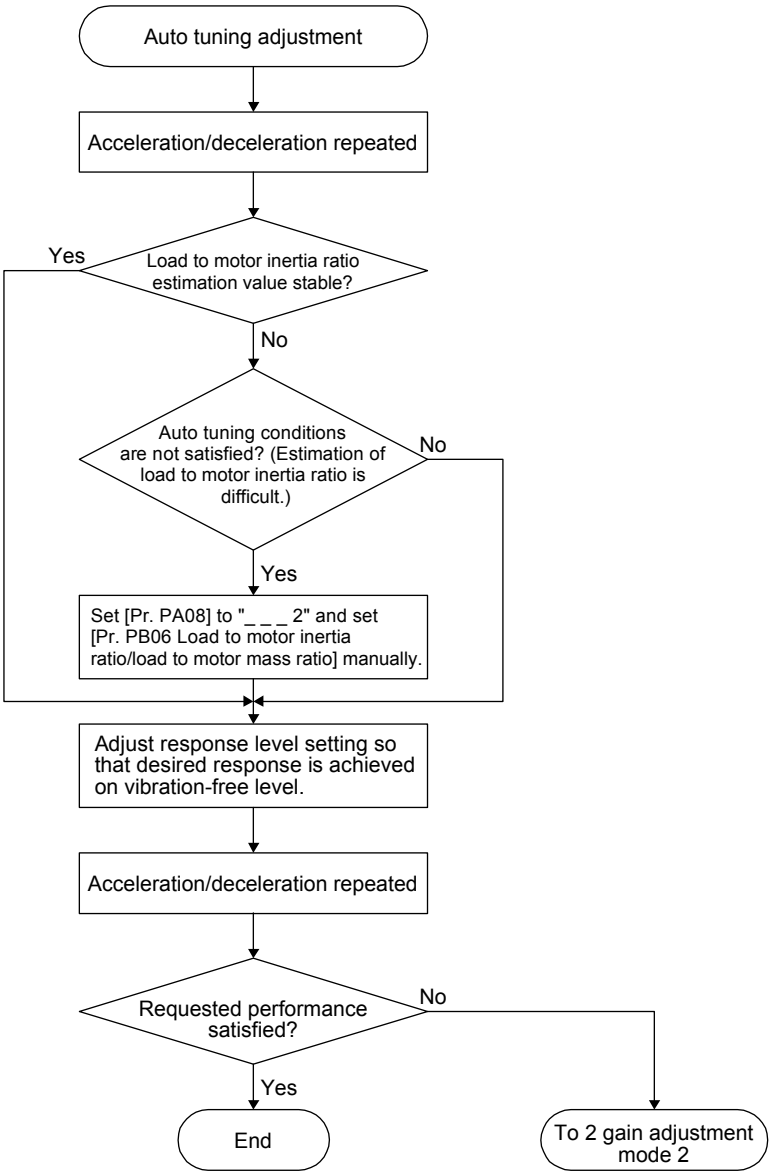

6.3.4 Response level setting in auto tuning mode

Set the response of the whole servo system by [Pr. PA09]. As the response level setting is increased, the track ability and settling time for a command decreases, but a too high response level will generate vibration. Hence, make setting until desired response is obtained within the vibration-free range.
If the response level setting cannot be increased up to the desired response because of machine resonance beyond 100 Hz, filter tuning mode selection in [Pr. PB01] or machine resonance suppression filter in [Pr. PB13] to [Pr. PB16], [Pr. PB46] to [Pr. PB51] may be used to suppress machine resonance. Suppressing machine resonance may allow the response level setting to increase. Refer to section 7.2 and 7.3 for settings of the adaptive tuning mode and machine resonance suppression filter.

[Pr. PA09]

Setting value	Machine characteristic		Reference (setting value of MR-J3)
	Response	Guideline for machine resonance frequency [Hz]	
1	Low response	2.7	
2		3.6	
3		4.9	
4		6.6	
5		10.0	1
6		11.3	2
7		12.7	3
8		14.3	4
9		16.1	5
10		18.1	6
11		20.4	7
12		23.0	8
13		25.9	9
14		29.2	10
15		32.9	11
16		37.0	12
17		41.7	13
18		47.0	14
19	Middle response	52.9	15
20		59.6	16

Setting value	Machine characteristic		Reference (setting value of MR-J3)
	Response	Guideline for machine resonance frequency [Hz]	
21	Middle response	67.1	17
22		75.6	18
23		85.2	19
24		95.9	20
25		108.0	21
26		121.7	22
27		137.1	23
28		154.4	24
29		173.9	25
30		195.9	26
31		220.6	27
32		248.5	28
33		279.9	29
34		315.3	30
35		355.1	31
36		400.0	32
37		446.6	
38		501.2	
39	High response	571.5	
40		642.7	

6.4 Manual mode

If you are not satisfied with the adjustment of auto tuning, you can make simple manual adjustment with three parameters.

> POINT
>
> ●If machine resonance occurs, filter tuning mode selection in [Pr. PB01] or machine resonance suppression filter in [Pr. PB13] to [Pr. PB16] and [Pr. PB46] to [Pr. PB51] may be used to suppress machine resonance. (Refer to section 7.2 to 7.3.)

(1) For speed control

(a) Parameter

The following parameters are used for gain adjustment.

Parameter	Symbol	Name
PB06	GD2	Load to motor inertia ratio/load to motor mass ratio
PB07	PG1	Model loop gain
PB09	VG2	Speed loop gain
PB10	VIC	Speed integral compensation

(b) Adjustment procedure

Step	Operation	Description
1	Brief-adjust with auto tuning. Refer to section 6.2.3.	
2	Change the setting of auto tuning to the manual mode ([Pr. PA08]: _ _ _ 3).	
3	Set the estimated value to the load to motor inertia ratio/load to motor mass ratio. (If the estimate value with auto tuning is correct, setting change is not required.)	
4	Set a slightly smaller value to the model loop gain Set a slightly larger value to the speed integral compensation.	
5	Increase the speed loop gain within the vibration- and unusual noise-free range, and return slightly if vibration takes place.	Increase the speed loop gain.
6	Decrease the speed integral compensation within the vibration-free range, and return slightly if vibration takes place.	Decrease the time constant of the speed integral compensation.
7	Increase the model loop gain, and return slightly if overshoot takes place.	Increase the model loop gain.
8	If the gains cannot be increased due to mechanical system resonance or the like and the desired response cannot be achieved, response may be increased by suppressing resonance with the adaptive tuning mode or machine resonance suppression filter and then executing steps 3 to 7.	Suppression of machine resonance Refer to section 7.2 and 7.3.
9	While checking the motor status, fine-adjust each gain.	Fine adjustment

(c) Parameter adjustment

1) [Pr. PB09 Speed loop gain]

This parameter determines the response level of the speed control loop. Increasing this value enhances response but a too high value will make the mechanical system liable to vibrate. The actual response frequency of the speed loop is as indicated in the following expression.

$$\text{Speed loop response frequency [Hz]} = \frac{\text{Speed loop gain}}{(1 + \text{Load to motor inertia ratio}) \times 2\pi}$$

2) [Pr. PB10 Speed integral compensation]

To eliminate stationary deviation against a command, the speed control loop is under proportional integral control. For the speed integral compensation, set the time constant of this integral control. Increasing the setting lowers the response level. However, if the load to motor inertia ratio is large or the mechanical system has any vibratory element, the mechanical system is liable to vibrate unless the setting is increased to some degree. The guideline is as indicated in the following expression.

$$\text{Speed integral compensation setting [ms]} \geq \frac{2000 \text{ to } 3000}{\text{Speed loop gain}/(1 + \text{Load to motor inertia ratio})}$$

3) [Pr. PB07 Model loop gain]

This parameter determines the response level to a speed command. Increasing the value improves track ability to a speed command, but a too high value will make overshoot liable to occur at settling.

$$\text{Model loop gain guideline} \leq \frac{\text{Speed loop gain}}{(1 + \text{Load to motor inertia ratio})} \times \left(\frac{1}{4} \text{ to } \frac{1}{8}\right)$$

(2) For position control

(a) Parameter

The following parameters are used for gain adjustment.

Parameter	Symbol	Name
PB06	GD2	Load to motor inertia ratio/load to motor mass ratio
PB07	PG1	Model loop gain
PB08	PG2	Position loop gain
PB09	VG2	Speed loop gain
PB10	VIC	Speed integral compensation

(b) Adjustment procedure

Step	Operation	Description
1	Brief-adjust with auto tuning. Refer to section 6.2.3.	
2	Change the setting of auto tuning to the manual mode ([Pr. PA08]: _ _ _ 3).	
3	Set the estimated value to the load to motor inertia ratio/load to motor mass ratio. (If the estimate value with auto tuning is correct, setting change is not required.)	
4	Set a slightly smaller value to the model loop gain and the position loop gain. Set a slightly larger value to the speed integral compensation.	
5	Increase the speed loop gain within the vibration- and unusual noise-free range, and return slightly if vibration takes place.	Increase the speed loop gain.
6	Decrease the speed integral compensation within the vibration-free range, and return slightly if vibration takes place.	Decrease the time constant of the speed integral compensation.
7	Increase the position loop gain, and return slightly if vibration takes place.	Increase the position loop gain.
8	Increase the model loop gain, and return slightly if overshoot takes place.	Increase the model loop gain.
9	If the gains cannot be increased due to mechanical system resonance or the like and the desired response cannot be achieved, response may be increased by suppressing resonance with the adaptive tuning mode or machine resonance suppression filter and then executing steps 3 to 8.	Suppression of machine resonance Refer to section 7.2 and 7.3.
10	While checking the settling characteristic and motor status, fine-adjust each gain.	Fine adjustment

(c) Parameter adjustment

1) [Pr. PB09 Speed loop gain]

This parameter determines the response level of the speed control loop. Increasing this value enhances response but a too high value will make the mechanical system liable to vibrate. The actual response frequency of the speed loop is as indicated in the following expression.

$$\text{Speed loop response frequency [Hz]} = \frac{\text{Speed loop gain}}{(1 + \text{Load to motor inertia ratio}) \times 2\pi}$$

2) [Pr. PB10 Speed integral compensation]

To eliminate stationary deviation against a command, the speed control loop is under proportional integral control. For the speed integral compensation, set the time constant of this integral control. Increasing the setting lowers the response level. However, if the load to motor inertia ratio is large or the mechanical system has any vibratory element, the mechanical system is liable to vibrate unless the setting is increased to some degree. The guideline is as indicated in the following expression.

$$\text{Speed integral compensation setting [ms]} \geq \frac{2000 \text{ to } 3000}{\text{Speed loop gain}/(1 + \text{Load to motor inertia ratio})}$$

3) [Pr. PB08 Position loop gain]
This parameter determines the response level to a disturbance to the position control loop. Increasing the value increases the response level to the disturbance, but a too high value will increase vibration of the mechanical system.

$$\text{Position loop gain guideline} \leq \frac{\text{Speed loop gain}}{(1 + \text{Load to motor inertia ratio})} \times \left(\frac{1}{4} \text{ to } \frac{1}{8}\right)$$

4) [Pr. PB07 Model loop gain]
This parameter determines the response level to a position command. Increasing the value improves track ability to a position command, but a too high value will make overshoot liable to occur at settling.

$$\text{Model loop gain guideline} \leq \frac{\text{Speed loop gain}}{(1 + \text{Load to motor inertia ratio})} \times \left(\frac{1}{4} \text{ to } \frac{1}{8}\right)$$

6.5 2 gain adjustment mode

The 2 gain adjustment mode is used to match the position loop gains of the axes when performing the interpolation operation of servo motors of two or more axes for an X-Y table or the like. In this mode, manually set the model loop gain that determines command track ability. Other parameters for gain adjustment are set automatically.

(1) 2 gain adjustment mode 1 (interpolation mode)
The 2 gain adjustment mode 1 manually set the model loop gain that determines command track ability. The mode constantly estimates the load to motor inertia ratio, and automatically set other parameters for gain adjustment to optimum gains using auto tuning response.
The following parameters are used for 2 gain adjustment mode 1.

(a) Automatically adjusted parameter
The following parameters are automatically adjusted by auto tuning.

Parameter	Symbol	Name
PB06	GD2	Load to motor inertia ratio/load to motor mass ratio
PB08	PG2	Position loop gain
PB09	VG2	Speed loop gain
PB10	VIC	Speed integral compensation

(b) Manually adjusted parameter
The following parameters are adjustable manually.

Parameter	Symbol	Name
PA09	RSP	Auto tuning response
PB07	PG1	Model loop gain

(2) 2 gain adjustment mode 2

Use 2 gain adjustment mode 2 when proper gain adjustment cannot be made with 2 gain adjustment mode 1. Since the load to motor inertia ratio is not estimated in this mode, set the value of a proper load to motor inertia ratio in [Pr. PB06].

The following parameters are used for 2 gain adjustment mode 2.

(a) Automatically adjusted parameter

The following parameters are automatically adjusted by auto tuning.

Parameter	Symbol	Name
PB08	PG2	Position loop gain
PB09	VG2	Speed loop gain
PB10	VIC	Speed integral compensation

(b) Manually adjusted parameter

The following parameters are adjustable manually.

Parameter	Symbol	Name
PA09	RSP	Auto tuning response
PB06	GD2	Load to motor inertia ratio/load to motor mass ratio
PB07	PG1	Model loop gain

(3) Adjustment procedure of 2 gain adjustment mode

POINT

●Set the same value in [Pr. PB07 Model loop gain] for the axis used in 2 gain adjustment mode.

Step	Operation	Description
1	Set to the auto tuning mode.	Select the auto tuning mode 1.
2	During operation, increase the response level setting value in [Pr. PA09], and return the setting if vibration occurs.	Adjustment in auto tuning mode 1.
3	Check value of the model loop gain and the load to motor inertia ratio in advance.	Check the upper setting limits.
4	Set the 2 gain adjustment mode 1 ([Pr. PA08]: _ _ _ 0).	Select the 2 gain adjustment mode 1 (interpolation mode).
5	When the load to motor inertia ratio is different from the design value, select the 2 gain adjustment mode 2 ([Pr. PA08]: _ _ _ 4) and then set the load to motor inertia ratio manually in [Pr. PB06].	Check the load to motor inertia ratio.
6	Set the model loop gain of all the axes to be interpolated to the same value. At that time, adjust to the setting value of the axis, which has the smallest model loop gain.	Set position loop gain.
7	Considering the interpolation characteristic and motor status, fine-adjust the model loop gain and response level setting.	Fine adjustment

(4) Parameter adjustment

[Pr. PB07 Model loop gain]

This parameter determines the response level of the position control loop. Increasing the value improves track ability to a position command, but a too high value will make overshoot liable to occur at settling. The droop pulses value is determined by the following expression.

$$\text{Number of droop pulses [pulse]} = \frac{\text{Position command frequency [pulse/s]}}{\text{Model loop gain setting}}$$

Position command frequency differs depending on the operation mode.

Rotary servo motor and direct drive motor:

$$\text{Position command frequency} = \frac{\text{Speed [r/min]}}{60} \times \text{Encoder resolution (number of pulses per servo motor revolution)}$$

Linear servo motor:

Position command frequency = Speed [mm/s] ÷ Encoder resolution (travel distance per pulse)

7. SPECIAL ADJUSTMENT FUNCTIONS

POINT

- The functions given in this chapter need not be used normally. Use them if you are not satisfied with the machine status after making adjustment in the methods in chapter 6.
- When you use a linear servo motor, replace the following left words to the right words.

Load to motor inertia ratio	→	Load to motor mass ratio
Torque	→	Thrust
(Servo motor) speed	→	(Linear servo motor) speed

7.1 Filter setting

The following filters are available with MR-J4 servo amplifiers.

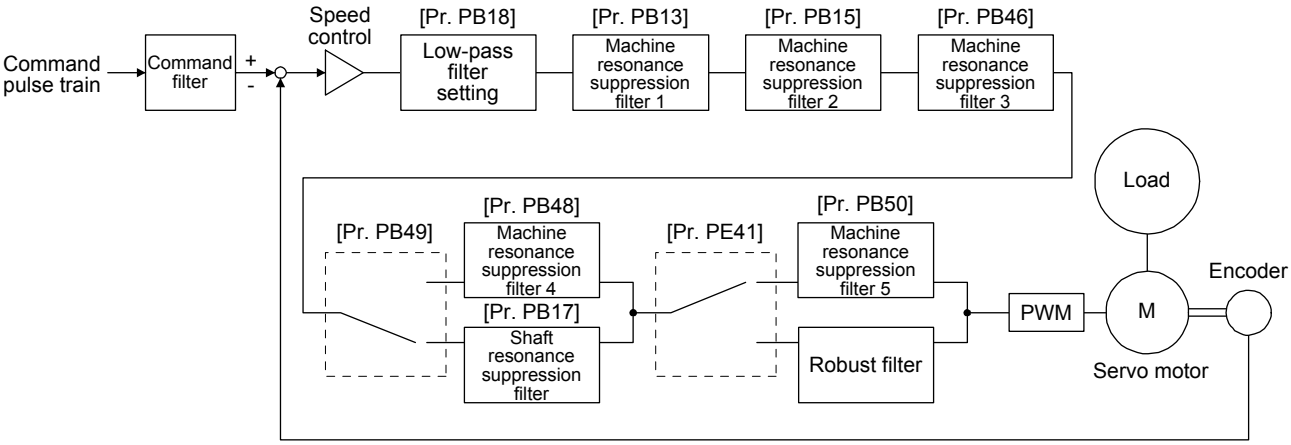

7.1.1 Machine resonance suppression filter

POINT

- The machine resonance suppression filter is a delay factor for the servo system. Therefore, vibration may increase if you set an incorrect resonance frequency or set notch characteristics too deep or too wide.
- If the frequency of machine resonance is unknown, decrease the notch frequency from higher to lower ones in order. The optimum notch frequency is set at the point where vibration is minimal.
- A deeper notch has a higher effect on machine resonance suppression but increases a phase delay and may increase vibration.
- A deeper notch has a higher effect on machine resonance suppression but increases a phase delay and may increase vibration.
- The machine characteristic can be grasped beforehand by the machine analyzer on MR Configurator2. This allows the required notch frequency and notch characteristics to be determined.

If a mechanical system has a natural resonance point, increasing the servo system response level may cause the mechanical system to produce resonance (vibration or unusual noise) at that resonance frequency. Using the machine resonance suppression filter and adaptive tuning can suppress the resonance of the mechanical system. The setting range is 10 Hz to 4500 Hz.

(1) Function

The machine resonance suppression filter is a filter function (notch filter) which decreases the gain of the specific frequency to suppress the resonance of the mechanical system. You can set the gain decreasing frequency (notch frequency), gain decreasing depth and width.

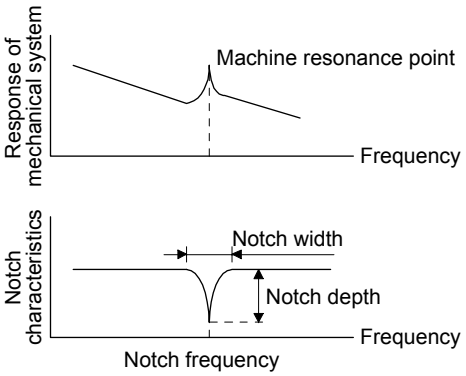

You can set five machine resonance suppression filters at most.

Filter	Setting parameter	Precaution	Parameter that is reset with vibration tough drive function	Parameter automatically adjusted with one-touch tuning
Machine resonance suppression filter 1	PB01/PB13/PB14	The filter can be set automatically with "Filter tuning mode selection" in [Pr. PB01].	PB13	PB01/PB13/PB14
Machine resonance suppression filter 2	PB15/PB16		PB15	PB15/PB16
Machine resonance suppression filter 3	PB46/PB47			PB47
Machine resonance suppression filter 4	PB48/PB49	Enabling the machine resonance suppression filter 4 disables the shaft resonance suppression filter. Using the shaft resonance suppression filter is recommended because it is adjusted properly depending on the usage situation. The shaft resonance suppression filter is enabled for the initial setting.		PB48/PB49
Machine resonance suppression filter 5	PB50/PB51	Enabling the robust filter disables the machine resonance suppression filter 5. The robust filter is disabled for the initial setting.		PB51

(2) Parameter

(a) Machine resonance suppression filter 1 ([Pr. PB13] and [Pr. PB14])
Set the notch frequency, notch depth and notch width of the machine resonance suppression filter 1 ([Pr. PB13] and [Pr. PB14])
When you select "Manual setting (_ _ _ 2)" of "Filter tuning mode selection" in [Pr. PB01], the setting of the machine resonance suppression filter 1 is enabled.

(b) Machine resonance suppression filter 2 ([Pr. PB15] and [Pr. PB16])
To use this filter, select "Enabled (_ _ _ 1)" of "Machine resonance suppression filter 2 selection" in [Pr. PB16].
How to set the machine resonance suppression filter 2 ([Pr. PB15] and [Pr. PB16]) is the same as for the machine resonance suppression filter 1 ([Pr. PB13] and [Pr. PB14]).

(c) Machine resonance suppression filter 3 ([Pr. PB46] and [Pr. PB47])
To use this filter, select "Enabled (_ _ _ 1)" of "Machine resonance suppression filter 3 selection" in [Pr. PB47].
How to set the machine resonance suppression filter 3 ([Pr. PB46] and [Pr. PB47]) is the same as for the machine resonance suppression filter 1 ([Pr. PB13] and [Pr. PB14]).

(d) Machine resonance suppression filter 4 ([Pr. PB48] and [Pr. PB49])
To use this filter, select "Enabled (_ _ _ 1)" of "Machine resonance suppression filter 4 selection" in [Pr. PB49]. However, enabling the machine resonance suppression filter 4 disables the shaft resonance suppression filter.
How to set the machine resonance suppression filter 4 ([Pr. PB48] and [Pr. PB49]) is the same as for the machine resonance suppression filter 1 ([Pr. PB13] and [Pr. PB14]).

(e) Machine resonance suppression filter 5 ([Pr. PB50] and [Pr. PB51])
To use this filter, select "Enabled (_ _ _ 1)" of "Machine resonance suppression filter 5 selection" in [Pr. PB51]. However, enabling the robust filter ([Pr. PE41: _ _ _ 1]) disables the machine resonance suppression filter 5.
How to set the machine resonance suppression filter 5 ([Pr. PB50] and [Pr. PB51]) is the same as for the machine resonance suppression filter 1 ([Pr. PB13] and [Pr. PB14]).

7.1.2 Adaptive filter II

POINT

- The machine resonance frequency which adaptive filter II (adaptive tuning) can respond to is about 100 Hz to 2.25 kHz. As for the resonance frequency out of the range, set manually.
- When adaptive tuning is executed, vibration sound increases as an excitation signal is forcibly applied for several seconds.
- When adaptive tuning is executed, machine resonance is detected for a maximum of 10 seconds and a filter is generated. After filter generation, the adaptive tuning mode automatically shifts to the manual setting.
- Adaptive tuning generates the optimum filter with the currently set control gains. If vibration occurs when the response setting is increased, execute adaptive tuning again.
- During adaptive tuning, a filter having the best notch depth at the set control gain is generated. To allow a filter margin against machine resonance, increase the notch depth in the manual setting.
- Adaptive vibration suppression control may provide no effect on a mechanical system which has complex resonance characteristics.

(1) Function

Adaptive filter II (adaptive tuning) is a function in which the servo amplifier detects machine vibration for a predetermined period of time and sets the filter characteristics automatically to suppress mechanical system vibration. Since the filter characteristics (frequency, depth) are set automatically, you need not be conscious of the resonance frequency of a mechanical system.

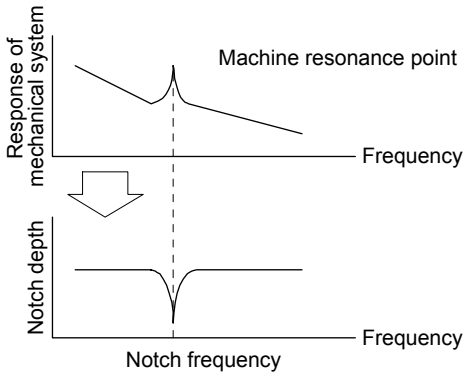

When machine resonance is large and frequency is low

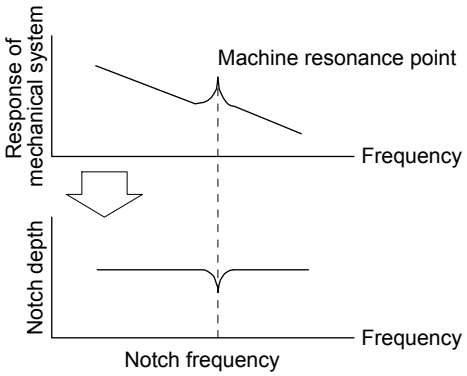

When machine resonance is small and frequency is high

(2) Parameter

Select how to set the filter tuning in [Pr. PB01 Adaptive tuning mode (adaptive filter II)].

[Pr. PB01]

0	0	0	

Filter tuning mode selection

Setting value	Filter tuning mode selection	Automatically set parameter
0	Disabled	
1	Automatic setting	PB13/PB14
2	Manual setting	

(3) Adaptive tuning mode procedure

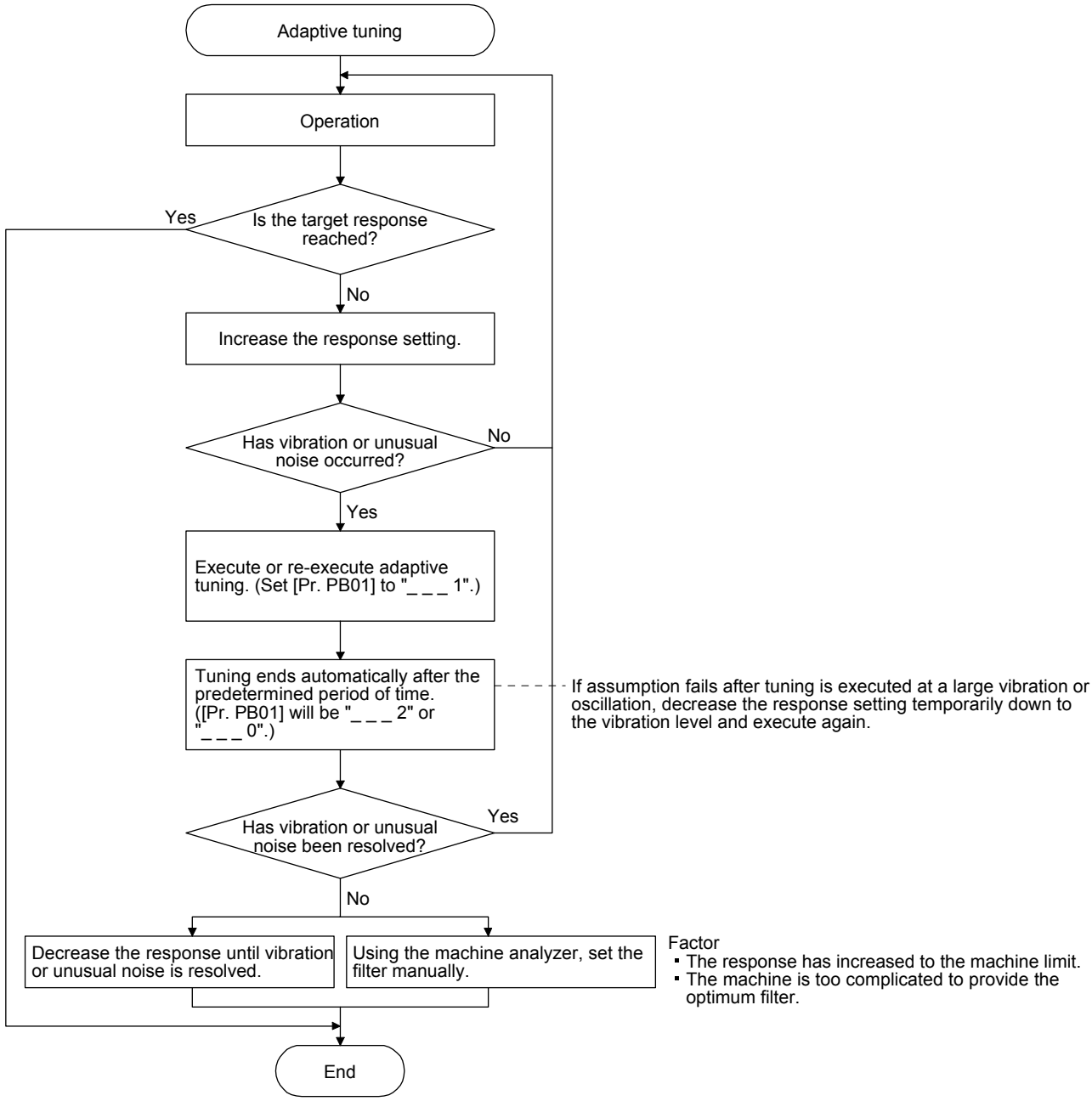

7.1.3 Shaft resonance suppression filter

> **POINT**
>
> ●This filter is set properly by default according to servo motor you use and load moment of inertia. For [Pr. PB23], "_ _ _ 0" (automatic setting) is recommended because setting "Shaft resonance suppression filter selection" in [Pr. PB23] or setting [Pr. PB17 Shaft resonance suppression filter] can degrades in performance.

(1) Function

When a load is mounted to the servo motor shaft, resonance by shaft torsion during driving may generate a mechanical vibration at high frequency. The shaft resonance suppression filter suppresses the vibration.

When you select "Automatic setting", the filter will be set automatically on the basis of the motor you use and the load to servo motor inertia ratio. The disabled setting increases the response of the servo amplifier for high resonance frequency.

(2) Parameter

Set "Shaft resonance suppression filter selection" in [Pr. PB23].

[Pr. PB23]

0	0	0	

Shaft resonance suppression filter selection
0: Automatic setting
1: Manual setting
2: Disabled

To set [Pr. PB17 Shaft resonance suppression filter] automatically, select "Automatic setting".

To set [Pr. PB17 Shaft resonance suppression filter] manually, select "Manual setting". The setting values are as follows.

Shaft resonance suppression filter setting frequency selection

Setting value	Frequency [Hz]	Setting value	Frequency [Hz]
_ _ 0 0	Disabled	_ _ 1 0	562
_ _ 0 1	Disabled	_ _ 1 1	529
_ _ 0 2	4500	_ _ 1 2	500
_ _ 0 3	3000	_ _ 1 3	473
_ _ 0 4	2250	_ _ 1 4	450
_ _ 0 5	1800	_ _ 1 5	428
_ _ 0 6	1500	_ _ 1 6	409
_ _ 0 7	1285	_ _ 1 7	391
_ _ 0 8	1125	_ _ 1 8	375
_ _ 0 9	1000	_ _ 1 9	360
_ _ 0 A	900	_ _ 1 A	346
_ _ 0 B	818	_ _ 1 B	333
_ _ 0 C	750	_ _ 1 C	321
_ _ 0 D	692	_ _ 1 D	310
_ _ 0 E	642	_ _ 1 E	300
_ _ 0 F	600	_ _ 1 F	290

7.1.4 Low-pass filter

(1) Function

When a ball screw or the like is used, resonance of high frequency may occur as the response level of the servo system is increased. To prevent this, the low-pass filter is enabled for a torque command as a default. The filter frequency of the low-pass filter is automatically adjusted to the value in the following equation.

$$\text{Filter frequency ([rad/s])} = \frac{VG2}{1 + GD2} \times 10$$

However, when an automatically adjusted value is smaller than VG2, the filter frequency will be the VG2 value. To set [Pr. PB18] manually, select "Manual setting (_ _ 1 _)" of "Low-pass filter selection" in [Pr. PB23].

(2) Parameter

Set "Low-pass filter selection" in [Pr. PB23].

[Pr. PB23]

0	0		0

Low-pass filter selection
0: Automatic setting
1: Manual setting
2: Disabled

7.1.5 Advanced vibration suppression control II

POINT

- The function is enabled when "Gain adjustment mode selection" in [Pr. PA08] is "Auto tuning mode 2 (_ _ _ 2)", "Manual mode (_ _ _ 3)", or "2 gain adjustment mode 2 (_ _ _ 4)".
- The machine resonance frequency supported in the vibration suppression control tuning mode is 1.0 Hz to 100.0 Hz. As for the vibration out of the range, set manually.
- Stop the servo motor before changing the vibration suppression control-related parameters. Otherwise, it may cause an unexpected operation.
- For positioning operation during execution of vibration suppression control tuning, provide a stop time to ensure a stop after vibration damping.
- Vibration suppression control tuning may not make normal estimation if the residual vibration at the servo motor side is small.
- Vibration suppression control tuning sets the optimum parameter with the currently set control gains. When the response setting is increased, set vibration suppression control tuning again.
- When using the vibration suppression control 2, set "_ _ _ 1" in [Pr. PA24].

(1) Function

Vibration suppression control is used to further suppress load-side vibration, such as work-side vibration and base shake. The servo motor-side operation is adjusted for positioning so that the machine does not vibrate.

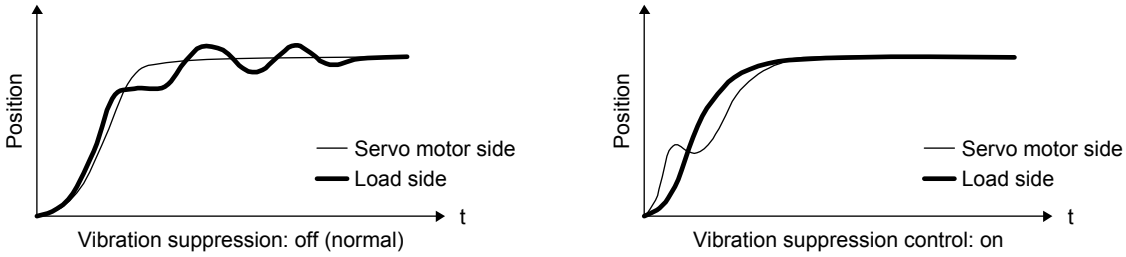

When the advanced vibration suppression control II ([Pr. PB02 Vibration suppression control tuning mode]) is executed, the vibration frequency at load side is automatically estimated to suppress machine side vibration two times at most.

In the vibration suppression control tuning mode, this mode shifts to the manual setting after the positioning operation is performed the predetermined number of times. For manual setting, adjust the vibration suppression control 1 with [Pr. PB19] to [Pr. PB22] and vibration suppression control 2 with [Pr. PB52] to [Pr. PB55].

(2) Parameter

Set [Pr. PB02 Vibration suppression control tuning mode (advanced vibration suppression control II)]. When you use a vibration suppression control, set "Vibration suppression control 1 tuning mode selection". When you use two vibration suppression controls, set "Vibration suppression control 2 tuning mode selection" in addition.

[Pr. PB02]

0	0		

Vibration suppression control 1 tuning mode

Setting value	Vibration suppression control 1 tuning mode selection	Automatically set parameter
_ _ _ 0	Disabled	
_ _ _ 1	Automatic setting	PB19/PB20/PB21/PB22
_ _ _ 2	Manual setting	

Vibration suppression control 2 tuning mode

Setting value	Vibration suppression control 2 tuning mode selection	Automatically set parameter
_ _ 0 _	Disabled	
_ _ 1 _	Automatic setting	PB52/PB53/PB54/PB55
_ _ 2 _	Manual setting	

(3) Vibration suppression control tuning procedure

The following flow chart is for the vibration suppression control 1. For the vibration suppression control 2, set "_ _ 1 _" in [Pr. PB02] to execute the vibration suppression control tuning.

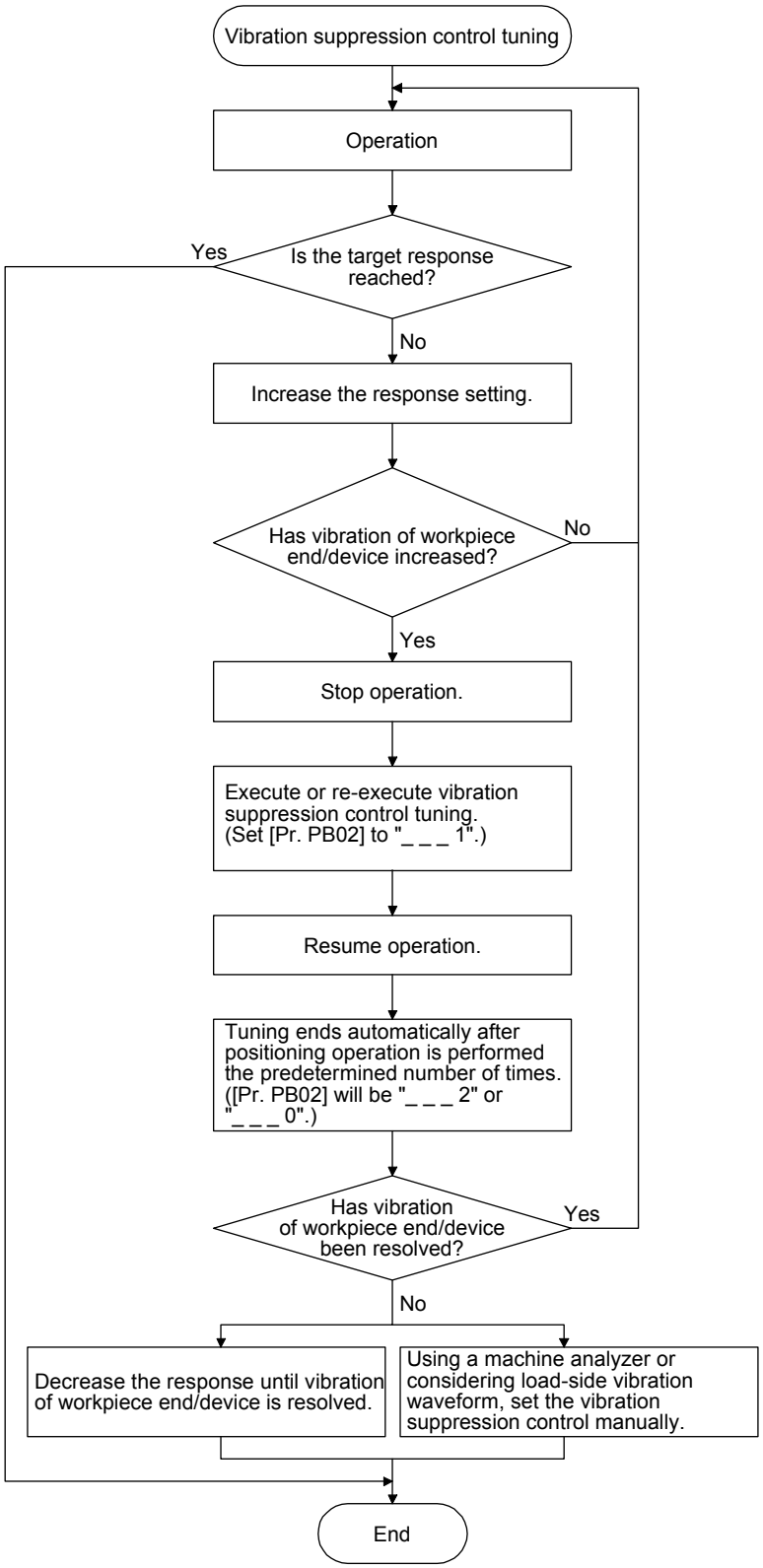

Factor
- Estimation cannot be made as load-side vibration has not been transmitted to the servo motor side.
- The response of the model loop gain has increased to the load-side vibration frequency (vibration suppression control limit).

(4) Vibration suppression control manual mode

POINT

- When load-side vibration does not show up in servo motor-side vibration, the setting of the servo motor-side vibration frequency does not produce an effect.
- When the anti-resonance frequency and resonance frequency can be confirmed using the machine analyzer or external equipment, do not set the same value but set different values to improve the vibration suppression performance.

Measure work-side vibration and device shake with the machine analyzer or external measuring instrument, and set the following parameters to adjust vibration suppression control manually.

Setting item	Vibration suppression control 1	Vibration suppression control 2
Vibration suppression control - Vibration frequency	[Pr. PB19]	[Pr. PB52]
Vibration suppression control - Resonance frequency	[Pr. PB20]	[Pr. PB53]
Vibration suppression control - Vibration frequency damping	[Pr. PB21]	[Pr. PB54]
Vibration suppression control - Resonance frequency damping	[Pr. PB22]	[Pr. PB55]

Step 1 Select "Manual setting (_ _ _ 2)" of "Vibration suppression control 1 tuning mode selection" or "Manual setting (_ _ 2 _)" of "Vibration suppression control 2 tuning mode selection" in [Pr. PB02].

Step 2 Set "Vibration suppression control - Vibration frequency" and "Vibration suppression control - Resonance frequency" as follows.

However, the value of [Pr. PB07 Model loop gain], vibration frequency, and resonance frequency have the following usable range and recommended range.

Vibration suppression control	Usable range	Recommended setting range
Vibration suppression control 1	[Pr. PB19] > 1/2π × (0.9 × [Pr. PB07]) [Pr. PB20] > 1/2π × (0.9 × [Pr. PB07])	[Pr. PB19] > 1/2π × (1.5 × [Pr. PB07]) [Pr. PB20] > 1/2π × (1.5 × [Pr. PB07])
Vibration suppression control 2	When [Pr. PB19] < [Pr. PB52], [Pr. PB52] > (5.0 + 0.1 × [Pr. PB07]) [Pr. PB53] > (5.0 + 0.1 × [Pr. PB07]) 1.1 < [Pr. PB52]/[Pr. PB19] < 5.5 [Pr. PB07] < 2π (0.3 × [Pr. PB19] + 1/8 × [Pr. PB52])	When [Pr. PB19] < [Pr. PB52], [Pr. PB52], [Pr. PB53] > 6.25 Hz 1.1 < [Pr. PB52]/[Pr. PB19] < 4 [Pr. PB07] < 1/3 × (4 × [Pr. PB19] + 2 × [Pr. PB52])

(a) When a vibration peak can be confirmed with machine analyzer using MR Configurator2, or external equipment.

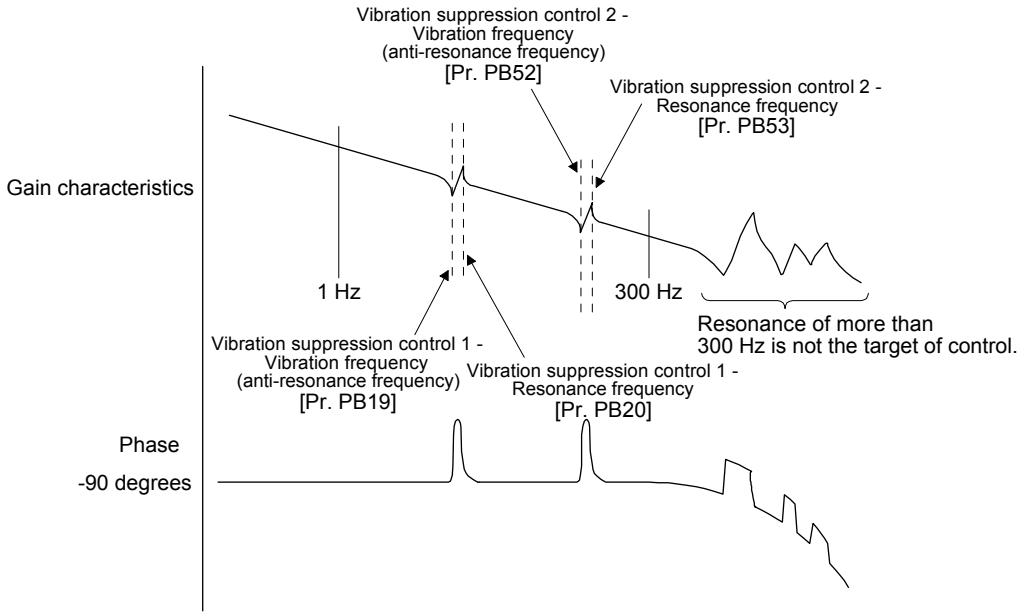

(b) When vibration can be confirmed using monitor signal or external sensor

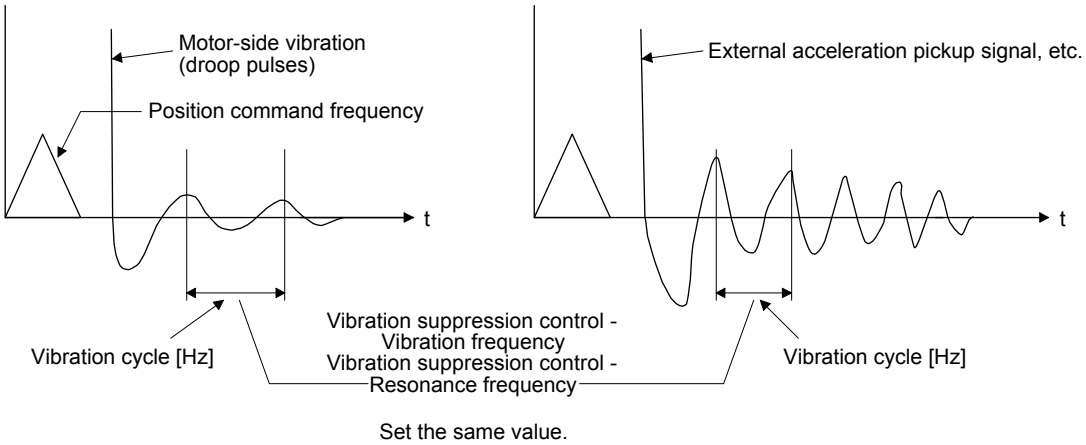

Step 3 Fine-adjust "Vibration suppression control - Vibration frequency damping" and "Vibration suppression control - Resonance frequency damping".

7.1.6 Command notch filter

POINT

- By using the advanced vibration suppression control II and the command notch filter, the load-side vibration of three frequencies can be suppressed.
- The frequency range of machine vibration, which can be supported by the command notch filter, is between 4.5 Hz and 2250 Hz. Set a frequency close to the machine vibration frequency and within the range.
- When [Pr. PB45 Command notch filter] is changed during the positioning operation, the changed setting is not reflected. The setting is reflected approximately 150 ms after the servo motor stops (after servo-lock).

(1) Function

Command notch filter has a function that lowers the gain of the specified frequency contained in a position command. By lowering the gain, load-side vibration, such as work-side vibration and base shake, can be suppressed. Which frequency to lower the gain and how deep to lower the gain can be set.

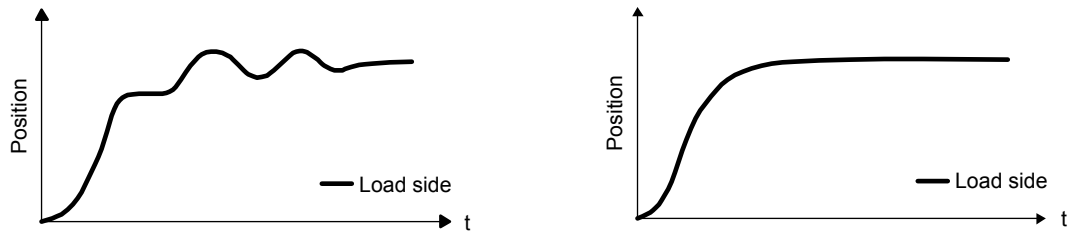

Command notch filter: disabled

Command notch filter: enabled

(2) Parameter

Set [Pr. PB45 Command notch filter] as shown below. For the command notch filter setting frequency, set the closest value to the vibration frequency [Hz] at the load side.

[Pr. PB45]

0			

Notch depth — Command notch filter setting frequency

Setting value	Depth [dB]
0	-40.0
1	-24.1
2	-18.1
3	-14.5
4	-12.0
5	-10.1
6	-8.5
7	-7.2
8	-6.0
9	-5.0
A	-4.1
B	-3.3
C	-2.5
D	-1.8
E	-1.2
F	-0.6

Setting value	Frequency [Hz]	Setting value	Frequency [Hz]	Setting value	Frequency [Hz]
00	Disabled	20	70	40	17.6
01	2250	21	66	41	16.5
02	1125	22	62	42	15.6
03	750	23	59	43	14.8
04	562	24	56	44	14.1
05	450	25	53	45	13.4
06	375	26	51	46	12.8
07	321	27	48	47	12.2
08	281	28	46	48	11.7
09	250	29	45	49	11.3
0A	225	2A	43	4A	10.8
0B	204	2B	41	4B	10.4
0C	187	2C	40	4C	10.0
0D	173	2D	38	4D	9.7
0E	160	2E	37	4E	9.4
0F	150	2F	36	4F	9.1
10	140	30	35.2	50	8.8
11	132	31	33.1	51	8.3
12	125	32	31.3	52	7.8
13	118	33	29.6	53	7.4
14	112	34	28.1	54	7.0
15	107	35	26.8	55	6.7
16	102	36	25.6	56	6.4
17	97	37	24.5	57	6.1
18	93	38	23.4	58	5.9
19	90	39	22.5	59	5.6
1A	86	3A	21.6	5A	5.4
1B	83	3B	20.8	5B	5.2
1C	80	3C	20.1	5C	5.0
1D	77	3D	19.4	5D	4.9
1E	75	3E	18.8	5E	4.7
1F	72	3F	18.2	5F	4.5

7.2 Gain switching function

You can switch gains with the function. You can switch gains during rotation and during stop, and can use a control command from a controller to switch gains during operation.

7.2.1 Applications

The following shows when you use the function.

(1) You want to increase the gains during servo-lock but decrease the gains to reduce noise during rotation.

(2) You want to increase the gains during settling to shorten the stop settling time.

(3) You want to change the gains using a control command from a controller to ensure stability of the servo system since the load to motor inertia ratio varies greatly during a stop (e.g. a large load is mounted on a carrier).

7.2.2 Function block diagram

The control gains, load to motor inertia ratio, and vibration suppression control settings are changed according to the conditions selected by [Pr. PB26 Gain switching function] and [Pr. PB27 Gain switching condition].

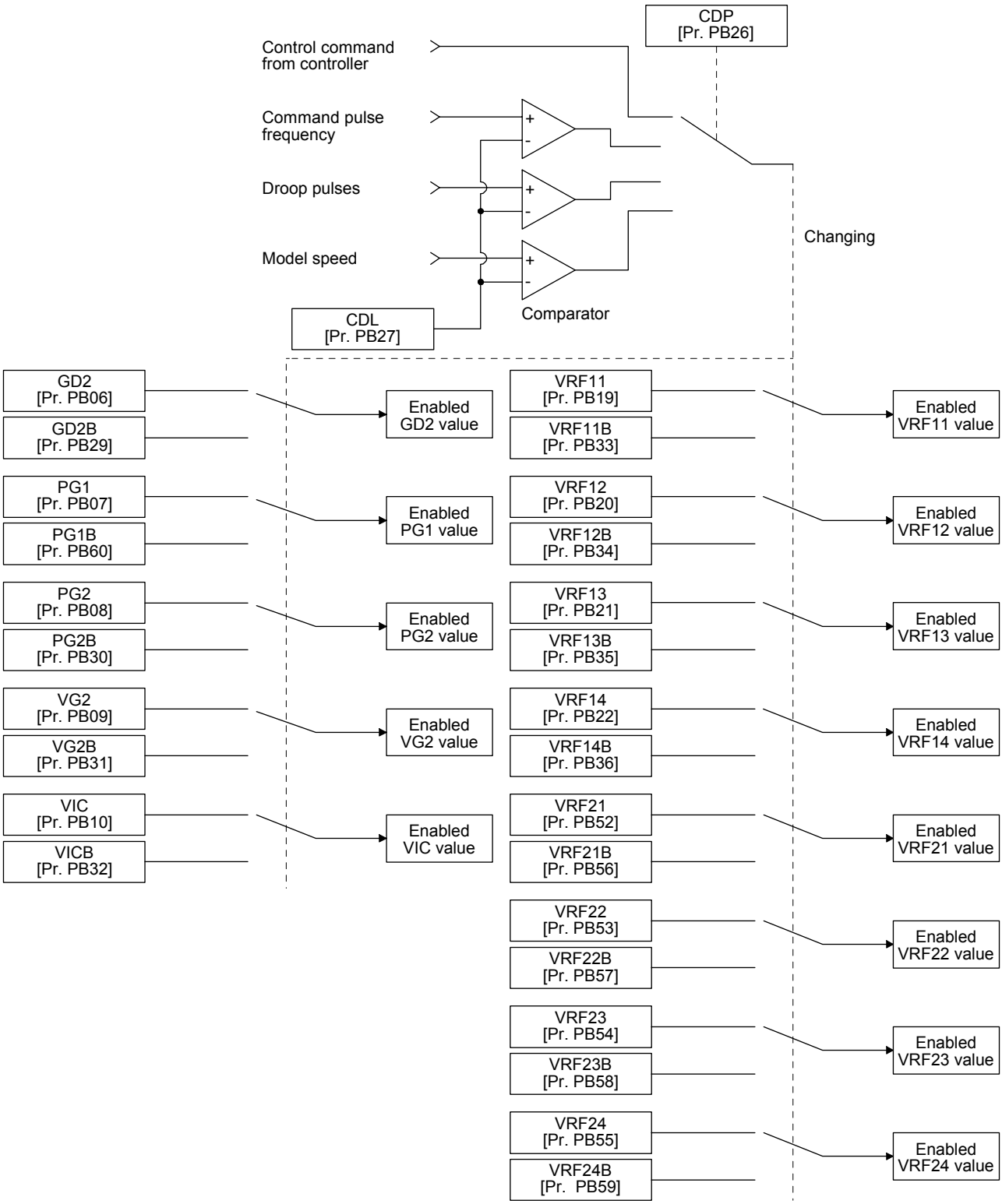

7.2.3 Parameter

When using the gain switching function, always select "Manual mode (_ _ _ 3)" of "Gain adjustment mode selection" in [Pr. PA08 Auto tuning mode]. The gain switching function cannot be used in the auto tuning mode.

(1) Parameter for setting gain switching condition

Parameter	Symbol	Name	Unit	Description
PB26	CDP	Gain switching selection		Used to select the changing condition.
PB27	CDL	Gain switching condition	[kpulse/s] /[pulse] /[r/min]	Used to set the changing condition values.
PB28	CDT	Gain switching time constant	[ms]	You can set the filter time constant for a gain change at changing.

(a) [Pr. PB26 Gain switching function]
Used to set the gain switching condition. Select the switching condition in the first digit and second digit.

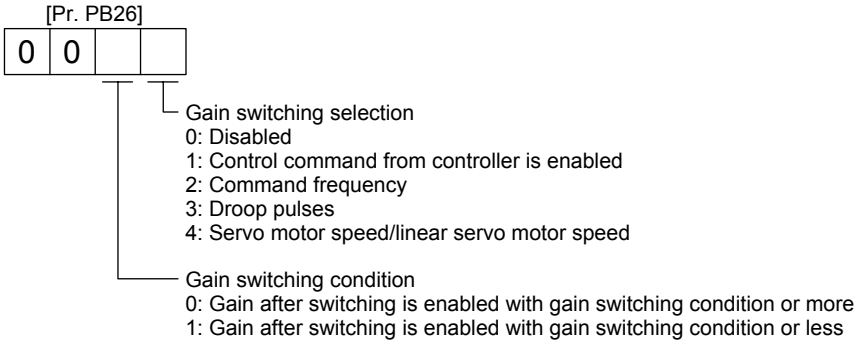

(b) [Pr. PB27 Gain switching condition]
Set a level to switch gains after you select "Command frequency", "Droop pulses", or "Servo motor speed/linear servo motor speed" in [Pr. PB26 Gain switching function].
The setting unit is as follows.

Gain switching condition	Unit
Command frequency	[kpulse/s]
Droop pulses	[pulse]
Servo motor speed/linear servo motor speed	[r/min]/[mm/s]

(c) [Pr. PB28 Gain switching time constant]
You can set the primary delay filter to each gain at gain switching. This parameter is used to suppress shock given to the machine if the gain difference is large at gain switching, for example.

(2) Switchable gain parameter

Loop gain	Before switching			After switching		
	Parameter	Symbol	Name	Parameter	Symbol	Name
Load to motor inertia ratio/load to motor mass ratio	PB06	GD2	Load to motor inertia ratio/load to motor mass ratio	PB29	GD2B	Load to motor inertia ratio/load to motor mass ratio after gain switching
Model loop gain	PB07	PG1	Model loop gain	PB60	PG1B	Model loop gain after gain switching
Position loop gain	PB08	PG2	Position loop gain	PB30	PG2B	Position loop gain after gain switching
Speed loop gain	PB09	VG2	Speed loop gain	PB31	VG2B	Speed loop gain after gain switching
Speed integral compensation	PB10	VIC	Speed integral compensation	PB32	VICB	Speed integral compensation after gain switching
Vibration suppression control 1 - Vibration frequency	PB19	VRF11	Vibration suppression control 1 - Vibration frequency	PB33	VRF11B	Vibration suppression control 1 - Vibration frequency after gain switching
Vibration suppression control 1 - Resonance frequency	PB20	VRF12	Vibration suppression control 1 - Resonance frequency	PB34	VRF12B	Vibration suppression control 1 - Resonance frequency after gain switching
Vibration suppression control 1 - Vibration frequency damping	PB21	VRF13	Vibration suppression control 1 - Vibration frequency damping	PB35	VRF13B	Vibration suppression control 1 - Vibration frequency damping after gain switching
Vibration suppression control 1 - Resonance frequency damping	PB22	VRF14	Vibration suppression control 1 - Resonance frequency damping	PB36	VRF14B	Vibration suppression control 1 - Resonance frequency damping after gain switching
Vibration suppression control 2 - Vibration frequency	PB52	VRF21	Vibration suppression control 2 - Vibration frequency	PB56	VRF21B	Vibration suppression control 2 - Vibration frequency after gain switching
Vibration suppression control 2 - Resonance frequency	PB53	VRF22	Vibration suppression control 2 - Resonance frequency	PB57	VRF22B	Vibration suppression control 2 - Resonance frequency after gain switching
Vibration suppression control 2 - Vibration frequency damping	PB54	VRF23	Vibration suppression control 2 - Vibration frequency damping	PB58	VRF23B	Vibration suppression control 2 - Vibration frequency damping after gain switching
Vibration suppression control 2 - Resonance frequency damping	PB55	VRF24	Vibration suppression control 2 - Resonance frequency damping	PB59	VRF24B	Vibration suppression control 2 - Resonance frequency damping after gain switching

(a) [Pr. PB06] to [Pr. PB10]
These parameters are the same as in ordinary manual adjustment. Gain switching allows the values of load to motor inertia ratio/load to motor mass ratio, position loop gain, speed loop gain, and speed integral compensation to be switched.

(b) [Pr. PB19] to [Pr. PB22]/[Pr. PB52] to [Pr. PB55]
These parameters are the same as in ordinary manual adjustment. Executing gain switching while the servo motor stops, You can change vibration frequency, resonance frequency, vibration frequency damping, and resonance frequency damping.

(c) [Pr. PB29 Load to motor inertia ratio/load to motor mass ratio after gain switching]
Set the load to motor inertia ratio or load to motor mass ratio after gain switching. If the load to motor inertia ratio does not change, set it to the same value as [Pr. PB06 Load to motor inertia ratio/load to motor mass ratio].

(d) [Pr. PB30 Position loop gain after gain switching], [Pr. PB31 Speed loop gain after gain switching], and [Pr. PB32 Speed integral compensation after gain switching]
Set the values of after switching position loop gain, speed loop gain and speed integral compensation.

(e) Vibration suppression control after gain switching ([Pr. PB33] to [Pr. PB36]/[Pr. PB56] to [Pr. PB59]), and [Pr. PB60 Model loop gain after gain switching]
The gain switching vibration suppression control and model loop gain are used only with control command from the controller.
You can switch the vibration frequency, resonance frequency, vibration frequency damping, resonance frequency damping, and model loop gain of the vibration suppression control 1 and vibration suppression control 2.

7.2.4 Gain switching procedure

This operation will be described by way of setting examples.

(1) When you choose switching by control command from the controller

(a) Setting example

Parameter	Symbol	Name	Setting value	Unit
PB06	GD2	Load to motor inertia ratio/load to motor mass ratio	4.00	[Multiplier]
PB07	PG1	Model loop gain	100	[rad/s]
PB08	PG2	Position loop gain	120	[rad/s]
PB09	VG2	Speed loop gain	3000	[rad/s]
PB10	VIC	Speed integral compensation	20	[ms]
PB19	VRF11	Vibration suppression control 1 - Vibration frequency	50	[Hz]
PB20	VRF12	Vibration suppression control 1 - Resonance frequency	50	[Hz]
PB21	VRF13	Vibration suppression control 1 - Vibration frequency damping	0.20	
PB22	VRF14	Vibration suppression control 1 - Resonance frequency damping	0.20	
PB52	VRF21	Vibration suppression control 2 - Vibration frequency	20	[Hz]
PB53	VRF22	Vibration suppression control 2 - Resonance frequency	20	[Hz]
PB54	VRF23	Vibration suppression control 2 - Vibration frequency damping	0.10	
PB55	VRF24	Vibration suppression control 2 - Resonance frequency damping	0.10	
PB29	GD2B	Load to motor inertia ratio/load to motor mass ratio after gain switching	10.00	[Multiplier]
PB60	PG1B	Model loop gain after gain switching	50	[rad/s]
PB30	PG2B	Position loop gain after gain switching	84	[rad/s]
PB31	VG2B	Speed loop gain after gain switching	4000	[rad/s]
PB32	VICB	Speed integral compensation after gain switching	50	[ms]
PB26	CDP	Gain switching function	0001 (Switch by control command from the controller.)	
PB28	CDT	Gain switching time constant	100	[ms]
PB33	VRF11B	Vibration suppression control 1 - Vibration frequency after gain switching	60	[Hz]
PB34	VRF12B	Vibration suppression control 1 - Resonance frequency after gain switching	60	[Hz]
PB35	VRF13B	Vibration suppression control 1 - Vibration frequency damping after gain switching	0.15	
PB36	VRF14B	Vibration suppression control 1 - Resonance frequency damping after gain switching	0.15	
PB56	VRF21B	Vibration suppression control 2 - Vibration frequency after gain switching	30	[Hz]
PB57	VRF22B	Vibration suppression control 2 - Resonance frequency after gain switching	30	[Hz]
PB58	VRF23B	Vibration suppression control 2 - Vibration frequency damping after gain switching	0.05	
PB59	VRF24B	Vibration suppression control 2 - Resonance frequency damping after gain switching	0.05	

(b) Switching timing chart

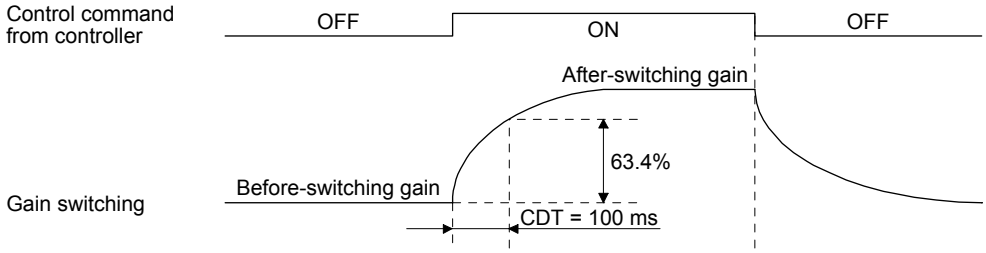

Model loop gain	100	→	50	→	100
Load to motor inertia ratio/load to motor mass ratio	4.00	→	10.00	→	4.00
Position loop gain	120	→	84	→	120
Speed loop gain	3000	→	4000	→	3000
Speed integral compensation	20	→	50	→	20
Vibration suppression control 1 - Vibration frequency	50	→	60	→	50
Vibration suppression control 1 - Resonance frequency	50	→	60	→	50
Vibration suppression control 1 - Vibration frequency damping	0.20	→	0.15	→	0.20
Vibration suppression control 1 - Resonance frequency damping	0.20	→	0.15	→	0.20
Vibration suppression control 2 - Vibration frequency	20	→	30	→	20
Vibration suppression control 2 - Resonance frequency	20	→	30	→	20
Vibration suppression control 2 - Vibration frequency damping	0.10	→	0.05	→	0.10
Vibration suppression control 2 - Resonance frequency damping	0.10	→	0.05	→	0.10

(2) When you choose switching by droop pulses

In this case, the vibration suppression control after gain switching and model loop gain after gain switching cannot be used.

(a) Setting example

Parameter	Symbol	Name	Setting value	Unit
PB06	GD2	Load to motor inertia ratio/load to motor mass ratio	4.00	[Multiplier]
PB08	PG2	Position loop gain	120	[rad/s]
PB09	VG2	Speed loop gain	3000	[rad/s]
PB10	VIC	Speed integral compensation	20	[ms]
PB29	GD2B	Load to motor inertia ratio/load to motor mass ratio after gain switching	10.00	[Multiplier]
PB30	PG2B	Position loop gain after gain switching	84	[rad/s]
PB31	VG2B	Speed loop gain after gain switching	4000	[rad/s]
PB32	VICB	Speed integral compensation after gain switching	50	[ms]
PB26	CDP	Gain switching selection	0003 (switching by droop pulses)	
PB27	CDL	Gain switching condition	50	[pulse]
PB28	CDT	Gain switching time constant	100	[ms]

(b) Switching timing chart

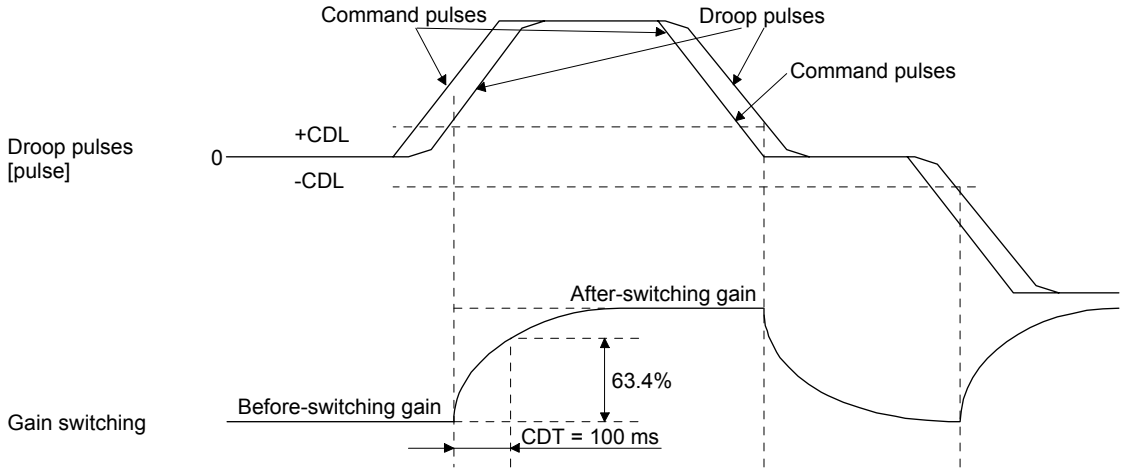

Load to motor inertia ratio/load to motor mass ratio	4.00	→	10.00	→	4.00	→	10.00
Position loop gain	120	→	84	→	120	→	84
Speed loop gain	3000	→	4000	→	3000	→	4000
Speed integral compensation	20	→	50	→	20	→	50

7.3 Tough drive function

POINT
●Set enable/disable of the tough drive function with [Pr. PA20 Tough drive setting]. (Refer to section 5.2.1.)

This function makes the equipment continue operating even under the condition that an alarm occurs.
The tough drive functions are the vibration tough drive and the instantaneous power failure tough drive.

7.3.1 Vibration tough drive function

This function prevent from vibrating by resetting a filter instantaneously when machine resonance occurs due to varied vibration frequency caused machine aging.
To reset the machine resonance suppression filters with the function, [Pr. PB13 Machine resonance suppression filter 1] and [Pr. PB15 Machine resonance suppression filter 2] should be set in advance.
Set [Pr. PB13] and [Pr. PB15] as follows.

(1) One-touch tuning execution (section 6.1)

(2) Manual setting (section 4.2.2)

The vibration tough drive function operates when a detected machine resonance frequency is within ±30% for a value set in [Pr. PB13 Machine resonance suppression filter 1] or [Pr. PB15 Machine resonance suppression filter 2].
To set a detection level of the function, set sensitivity in [Pr. PF23 Vibration tough drive - Oscillation detection level].

POINT
●Resetting [Pr. PB13] and [Pr. PB15] by the vibration tough drive function is performed constantly. However, the number of write times to the EEPROM is limited to once per hour. ●The vibration tough drive function does not reset [Pr. PB46 Machine resonance suppression filter 3], [Pr. PB48 Machine resonance suppression filter 4], and [Pr. PB50 Machine resonance suppression filter 5]. ●The vibration tough drive function does not detect a vibration of 100 Hz or less.

The following shows the function block diagram of the vibration tough drive function.
The function detects machine resonance frequency and compare it with [Pr. PB13] and [Pr. PB15], and reset a machine resonance frequency of a parameter whose set value is closer.

Filter	Setting parameter	Precaution	Parameter that is reset with vibration tough drive function
Machine resonance suppression filter 1	PB01/PB13/PB14	The filter can be set automatically with "Filter tuning mode selection" in [Pr. PB01].	PB13
Machine resonance suppression filter 2	PB15/PB16		PB15
Machine resonance suppression filter 3	PB46/PB47		
Machine resonance suppression filter 4	PB48/PB49	Enabling the machine resonance suppression filter 4 disables the shaft resonance suppression filter. Using the shaft resonance suppression filter is recommended because it is adjusted properly depending on the usage situation. The shaft resonance suppression filter is enabled for the initial setting.	
Machine resonance suppression filter 5	PB50/PB51	Enabling the robust filter disables the machine resonance suppression filter 5. The robust filter is disabled for the initial setting.	

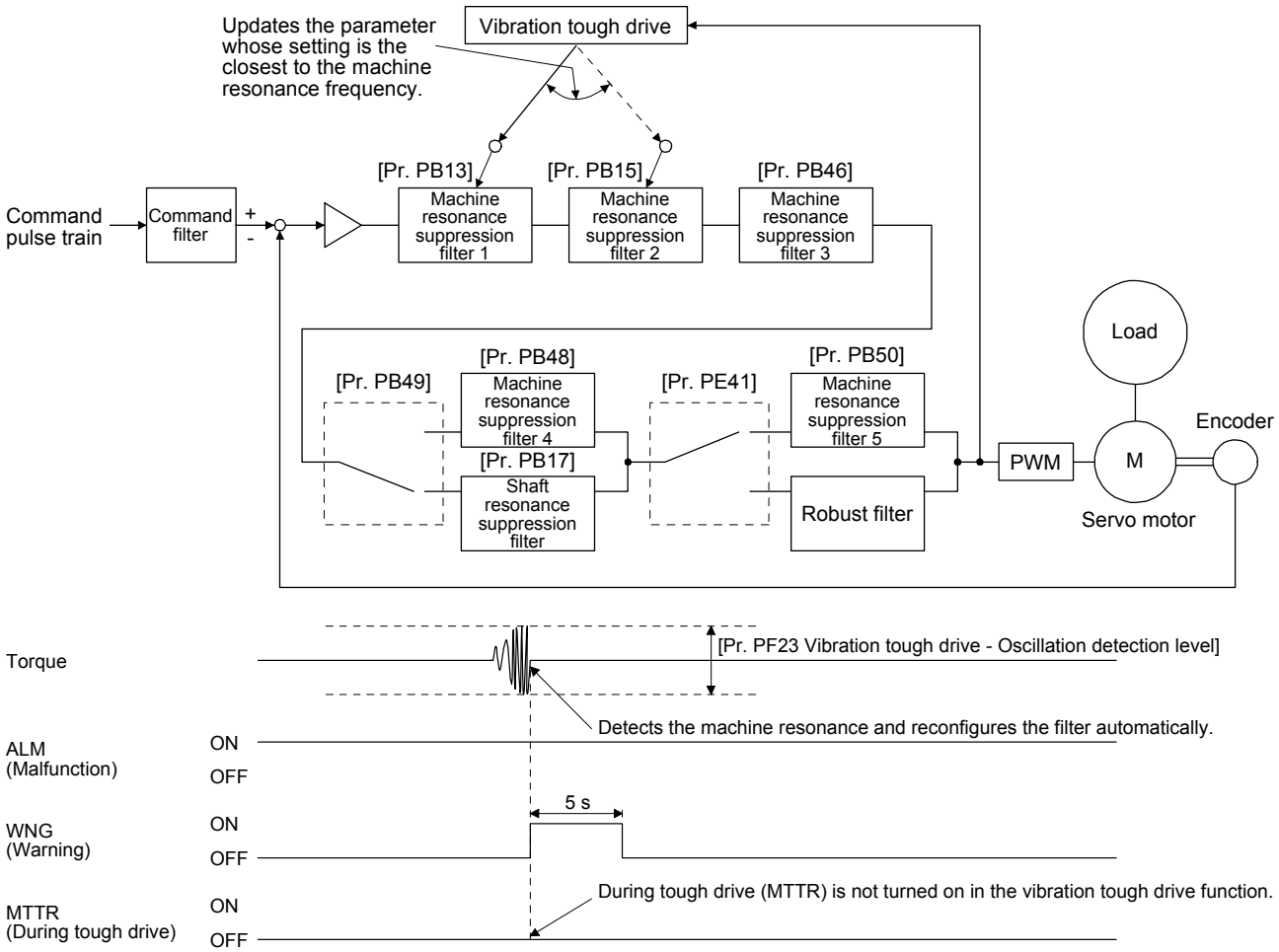

7.3.2 Instantaneous power failure tough drive function

The instantaneous power failure tough drive function avoids [AL. 10 Undervoltage] even when an instantaneous power failure occurs during operation. When the instantaneous power failure tough drive activates, the function will increase the tolerance against instantaneous power failure using the electrical energy charged in the capacitor in the servo amplifier and will change an alarm level of [AL. 10 Undervoltage] simultaneously. The [AL. 10.1 Voltage drop in the control circuit power] detection time for the control circuit power supply can be changed by [Pr. PF25 SEMI-F47 function - Instantaneous power failure detection time]. In addition, [AL. 10.2 Voltage drop in the main circuit power] detection level for the bus voltage is changed automatically.

POINT

- MBR (Electromagnetic brake interlock) will not turn off during the instantaneous power failure tough drive.
- When the load of instantaneous power failure is large, the undervoltage alarm ([AL. 10.2]) caused by the bus voltage drop may occur regardless of the set value of [Pr. PF25 SEMI-F47 function - Instantaneous power failure detection time].

(1) Instantaneous power failure time of the control circuit power supply > [Pr. PF25 SEMI-F47 function - Instantaneous power failure detection time]
The alarm occurs when the instantaneous power failure time of the control circuit power supply exceeds [Pr. PF25 SEMI-F47 function - Instantaneous power failure detection time].
MTTR (During tough drive) turns on after detecting the instantaneous power failure.
MBR (Electromagnetic brake interlock) turns off when the alarm occurs.

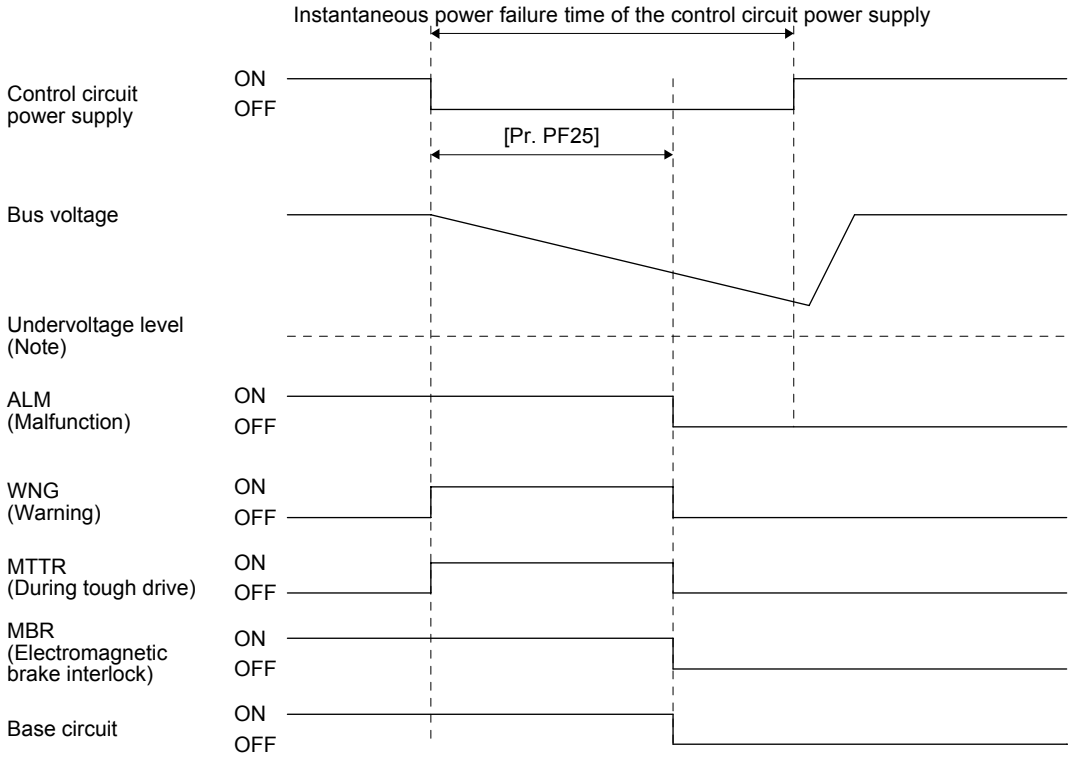

Note. Refer to table 7.1 for the undervoltage level.

(2) Instantaneous power failure time of the control circuit power supply < [Pr. PF25 SEMI-F47 function - Instantaneous power failure detection time]
Operation status differs depending on how bus voltage decrease.

(a) When the bus voltage decrease lower than Undervoltage level within the instantaneous power failure time of the control circuit power supply
[AL. 10 Undervoltage] occurs when the bus voltage decrease lower than Undervoltage level regardless of the enabled instantaneous power failure tough drive.

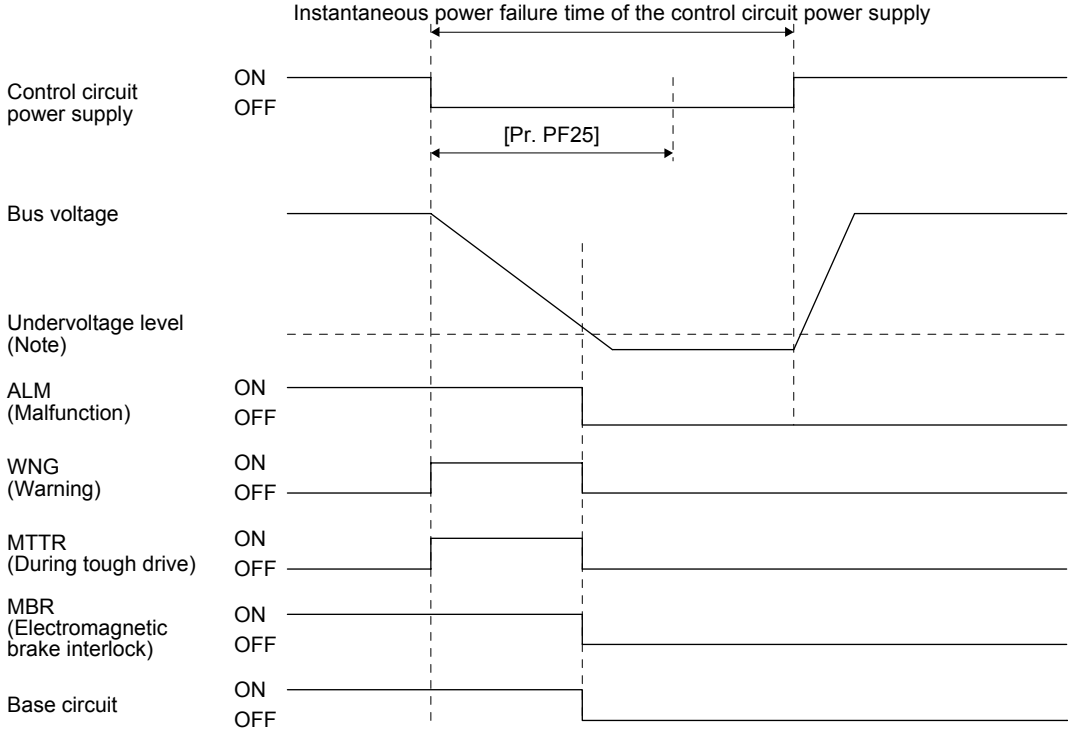

Note. Refer to table 7.1 for the undervoltage level.

(b) When the bus voltage does not decrease lower than Undervoltage level within the instantaneous power failure time of the control circuit power supply
The operation continues without alarming.

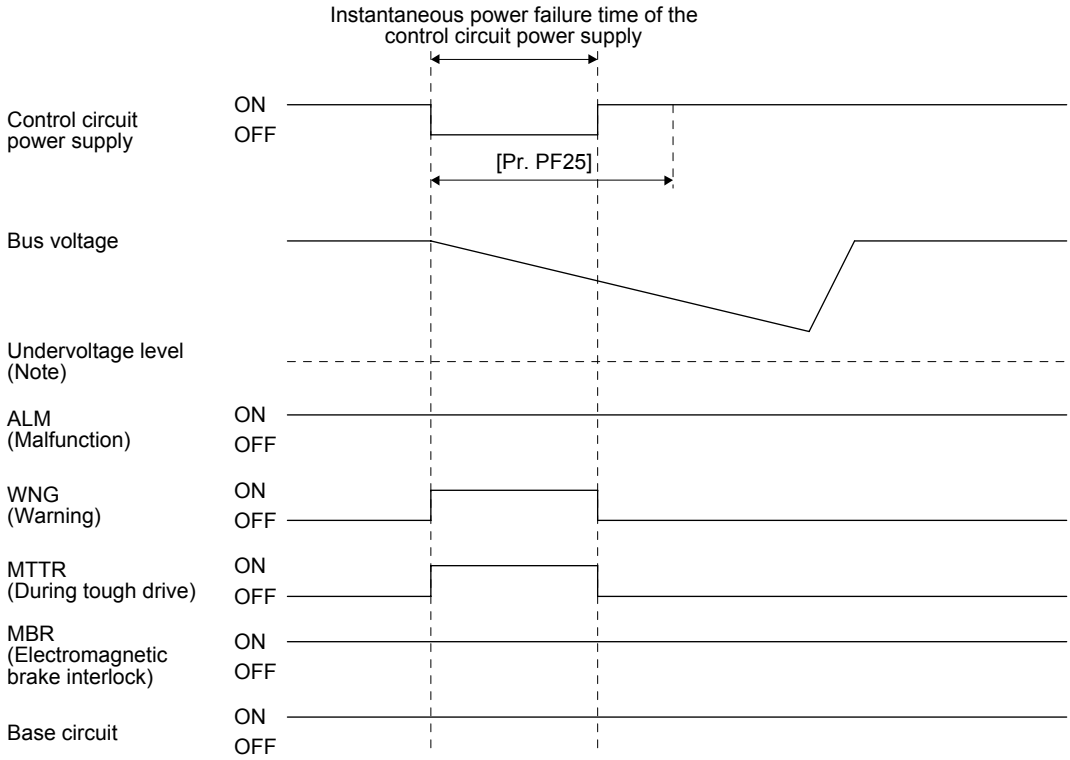

Note. Refer to table 7.1 for the undervoltage level.

7.4 Compliance with SEMI-F47 standard

POINT

- The control circuit power supply of the servo amplifier can be possible to comply with SEMI-F47 standard. However, a back-up capacitor may be necessary for instantaneous power failure in the main circuit power supply depending on the power supply impedance and operating situation. Be sure to check them by testing the entire equipment using actual machines.
- Use a 3-phase for the input power supply of the servo amplifier. Using a 1-phase 100 V AC/200 V AC for the input power supply will not comply with SEMI-F47 standard.

The following explains the compliance with "SEMI-F47 semiconductor process equipment voltage sag immunity test" of MR-J4 series.
This function enables to avoid triggering [AL. 10 Undervoltage] using the electrical energy charged in the capacitor in case that an instantaneous power failure occurs during operation.

(1) Parameter setting
Setting [Pr. PA20] and [Pr. PF25] as follows will enable SEMI-F47 function.

Parameter	Setting value	Description
PA20	_ 1 _ _	SEMI-F47 function selection
PF25	200	Set the time [ms] of the [AL. 10.1 Voltage drop in the control circuit power] occurrence.

Enabling SEMI-F47 function will change operation as follows.

(a) The voltage will drop in the control circuit power with "Rated voltage × 50% or less". 200 ms later, [AL. 10.1 Voltage drop in the control circuit power] will occur.

(b) [AL. 10.2 Voltage drop in the main circuit power] will occur when bus voltage is as follows.

Table 7.1 Voltages which trigger [AL. 10.2 Voltage drop in the main circuit power]

Servo amplifier	Bus voltage which triggers alarm
MR-J4-10B(-RJ) to MR-J4-700B(-RJ)	158 V DC
MR-J4-11KB(-RJ) to MR-J4-22KB(-RJ)	200 V DC
MR-J4-60B4(-RJ) to MR-J4-22KB4(-RJ)	380 V DC

(c) MBR (Electromagnetic brake interlock) will turn off when [AL. 10.1 Voltage drop in the control circuit power] occurs.

(2) Requirements conditions of SEMI-F47 standard

Table 7.2 shows the permissible time of instantaneous power failure for instantaneous power failure of SEMI-F47 standard.

Table 7.2 Requirements conditions of SEMI-F47 standard

Instantaneous power failure voltage	Permissible time of instantaneous power failure [s]
Rated voltage × 80%	1
Rated voltage × 70%	0.5
Rated voltage × 50%	0.2

(3) Calculation of tolerance against instantaneous power failure

Table 7.3 shows tolerance against instantaneous power failure when instantaneous power failure voltage is "rated voltage × 50%" and instantaneous power failure time is 200 ms.

Table 7.3 Tolerance against instantaneous power failure
(instantaneous power failure voltage = rated voltage × 50%,
instantaneous power failure time = 200 ms)

Servo amplifier model	Instantaneous maximum output [W]	Tolerance against instantaneous power failure [W] (voltage drop between lines)
MR-J4-10B(-RJ)	350	250
MR-J4-20B(-RJ)	700	420
MR-J4-40B(-RJ)	1400	630
MR-J4-60B(-RJ)	2100	410
MR-J4-70B(-RJ)	2625	1150
MR-J4-100B(-RJ)	3000	1190
MR-J4-200B(-RJ)	5400	2040
MR-J4-350B(-RJ)	10500	2600
MR-J4-500B(-RJ)	15000	4100
MR-J4-700B(-RJ)	21000	5900
MR-J4-11KB(-RJ)	40000	2600
MR-J4-15KB(-RJ)	50000	3500
MR-J4-22KB(-RJ)	56000	4300
MR-J4-60B4(-RJ)	1900	190
MR-J4-100B4(-RJ)	3500	200
MR-J4-200B4(-RJ)	5400	350
MR-J4-350B4(-RJ)	10500	730
MR-J4-500B4(-RJ)	15000	890
MR-J4-700B4(-RJ)	21000	1500
MR-J4-11KB4(-RJ)	40000	2400
MR-J4-15KB4(-RJ)	50000	3200
MR-J4-22KB4(-RJ)	56000	4200

Instantaneous maximum output means power which servo amplifier can output in maximum torque at rated speed. You can examine margins to compare the values of following conditions and instantaneous maximum output.
Even if driving at maximum torque with low speed in actual operation, the motor will not drive with the maximum output. This can be handled as a margin.
The following shows the conditions of tolerance against instantaneous power failure.

(a) Delta connection
For the 3-phase (L1/L2/L3) delta connection, an instantaneous power failure occurs in the voltage between a pair of lines (e.g. between L1 and L2) among voltages between three pairs of lines (between L1 and L2, L2 and L3, or L3 and L1).

(b) Star connection
For the 3-phase (L1/L2/L3/neutral point N) star connection, an instantaneous power failure occurs in the voltage between a pair of lines (e.g. between L1 and N) among voltages at six locations, between three pairs of lines (between L1 and L2, L2 and L3, or L3 and L1) and between one of the lines and the neutral point (between L1 and N, L2 and N, or L3 and N).

8. TROUBLESHOOTING

> POINT
>
> ●Refer to "MELSERVO-J4 Servo Amplifier Instruction Manual (Troubleshooting)" for details of alarms and warnings.
>
> ●As soon as an alarm occurs, make the Servo-off status and interrupt the main circuit power.
>
> ●[AL. 37 Parameter error] and warnings (except [AL. F0 Tough drive warning]) are not recorded in the alarm history.

8.1 Alarm and warning list

When an error occurs during operation, the corresponding alarm and warning are displayed. When the alarm or the warning occurs, refer to "MELSERVO-J4 Servo Amplifier Instruction Manual (Troubleshooting)" to remove the failure. When an alarm occurs, ALM will turn off.
After its cause has been removed, the alarm can be deactivated in any of the methods marked ○ in the alarm deactivation column in the following table. Warnings are automatically canceled after the cause of occurrence is removed.
For the alarms and warnings in which "SD" is written in the stop method column, the axis stops with the dynamic brake after forced stop deceleration. For the alarms and warnings in which "DB" or "EDB" is written in the stop method column, the axis stops with the dynamic brake without forced stop deceleration.

	No.	Name	Detail number	Detail name	Stop method (Note 4, 5)	Alarm reset		
						Error reset	CPU reset	Power off → on
Alarm	10	Undervoltage	10.1	Voltage drop in the control circuit power	EDB	○	○	○
			10.2	Voltage drop in the main circuit power	SD	○	○	○
	12	Memory error 1 (RAM)	12.1	RAM error 1	DB			○
			12.2	RAM error 2	DB			○
			12.3	RAM error 3	DB			○
			12.4	RAM error 4	DB			○
			12.5	RAM error 5	DB			○
	13	Clock error	13.1	Clock error 1	DB			○
			13.2	Clock error 2	DB			○
	14	Control process error	14.1	Control process error 1	DB			○
			14.2	Control process error 2	DB			○
			14.3	Control process error 3	DB			○
			14.4	Control process error 4	DB			○
			14.5	Control process error 5	DB			○
			14.6	Control process error 6	DB			○
			14.7	Control process error 7	DB			○
			14.8	Control process error 8	DB			○
			14.9	Control process error 9	DB			○
			14.A	Control process error 10	DB			○
	15	Memory error 2 (EEP-ROM)	15.1	EEP-ROM error at power on	DB			○
			15.2	EEP-ROM error during operation	DB			○

	No.	Name	Detail number	Detail name	Stop method (Note 4, 5)	Alarm reset		
						Error reset	CPU reset	Power off → on
Alarm	16	Encoder initial communication error 1	16.1	Encoder initial communication - Receive data error 1	DB			○
			16.2	Encoder initial communication - Receive data error 2	DB			○
			16.3	Encoder initial communication - Receive data error 3	DB			○
			16.5	Encoder initial communication - Transmission data error 1	DB			○
			16.6	Encoder initial communication - Transmission data error 2	DB			○
			16.7	Encoder initial communication - Transmission data error 3	DB			○
			16.A	Encoder initial communication - Process error 1	DB			○
			16.B	Encoder initial communication - Process error 2	DB			○
			16.C	Encoder initial communication - Process error 3	DB			○
			16.D	Encoder initial communication - Process error 4	DB			○
			16.E	Encoder initial communication - Process error 5	DB			○
			16.F	Encoder initial communication - Process error 6	DB			○
	17	Board error	17.1	Board error 1	DB			○
			17.3	Board error 2	DB			○
			17.4	Board error 3	DB			○
			17.5	Board error 4	DB			○
			17.6	Board error 5	DB			○
			17.8	Board error 6 (Note 6)	EDB			○
	19	Memory error 3 (FLASH-ROM)	19.1	Flash-ROM error 1	DB			○
			19.2	Flash-ROM error 2	DB			○
	1A	Servo motor combination error	1A.1	Servo motor combination error	DB			○
			1A.2	Servo motor control mode combination error	DB			○
	1E	Encoder initial communication error 2	1E.1	Encoder malfunction	DB			○
			1E.2	Load-side encoder malfunction	DB			○
	1F	Encoder initial communication error 3	1F.1	Incompatible encoder	DB			○
			1F.2	Incompatible load-side encoder	DB			○
	20	Encoder normal communication error 1	20.1	Encoder normal communication - Receive data error 1	EDB			○
			20.2	Encoder normal communication - Receive data error 2	EDB			○
			20.3	Encoder normal communication - Receive data error 3	EDB			○
			20.5	Encoder normal communication - Transmission data error 1	EDB			○
			20.6	Encoder normal communication - Transmission data error 2	EDB			○
			20.7	Encoder normal communication - Transmission data error 3	EDB			○
			20.9	Encoder normal communication - Receive data error 4	EDB			○
			20.A	Encoder normal communication - Receive data error 5	EDB			○

	No.	Name	Detail number	Detail name	Stop method (Note 4, 5)	Alarm reset		
						Error reset	CPU reset	Power off → on
Alarm	21	Encoder normal communication error 2	21.1	Encoder data error 1	EDB			○
			21.2	Encoder data update error	EDB			○
			21.3	Encoder data waveform error	EDB			○
			21.4	Encoder non-signal error	EDB			○
			21.5	Encoder hardware error 1	EDB			○
			21.6	Encoder hardware error 2	EDB			○
			21.9	Encoder data error 2	EDB			○
	24	Main circuit error	24.1	Ground fault detected by hardware detection circuit	DB			○
			24.2	Ground fault detected by software detection function	DB	○	○	○
	25	Absolute position erased	25.1	Servo motor encoder - Absolute position erased	DB			○
			25.2	Scale measurement encoder - Absolute position erased	DB			○
	27	Initial magnetic pole detection error	27.1	Magnetic pole detection - Abnormal termination	DB			○
			27.2	Magnetic pole detection - Time out error	DB			○
			27.3	Magnetic pole detection - Limit switch error	DB			○
			27.4	Magnetic pole detection - Estimated error	DB			○
			27.5	Magnetic pole detection - Position deviation error	DB			○
			27.6	Magnetic pole detection - Speed deviation error	DB			○
			27.7	Magnetic pole detection - Current error	DB			○
	28	Linear encoder error 2	28.1	Linear encoder - Environment error	EDB			○
	2A	Linear encoder error 1	2A.1	Linear encoder error 1-1	EDB			○
			2A.2	Linear encoder error 1-2	EDB			○
			2A.3	Linear encoder error 1-3	EDB			○
			2A.4	Linear encoder error 1-4	EDB			○
			2A.5	Linear encoder error 1-5	EDB			○
			2A.6	Linear encoder error 1-6	EDB			○
			2A.7	Linear encoder error 1-7	EDB			○
			2A.8	Linear encoder error 1-8	EDB			○
	2B	Encoder counter error	2B.1	Encoder counter error 1	EDB			○
			2B.2	Encoder counter error 2	EDB			○
	30	Regenerative error (Note 1)	30.1	Regeneration heat error	DB	○ (Note 1)	○ (Note 1)	○ (Note 1)
			30.2	Regeneration signal error	DB	○ (Note 1)	○ (Note 1)	○ (Note 1)
			30.3	Regeneration feedback signal error	DB	○ (Note 1)	○ (Note 1)	○ (Note 1)
	31	Overspeed	31.1	Abnormal motor speed	SD	○	○	○

	No.	Name	Detail number	Detail name	Stop method (Note 4, 5)	Alarm reset		
						Error reset	CPU reset	Power off → on
Alarm	32	Overcurrent	32.1	Overcurrent detected at hardware detection circuit (during operation)	DB			○
			32.2	Overcurrent detected at software detection function (during operation)	DB	○	○	○
			32.3	Overcurrent detected at hardware detection circuit (during a stop)	DB			○
			32.4	Overcurrent detected at software detection function (during a stop)	DB	○	○	○
	33	Overvoltage	33.1	Main circuit voltage error	EDB	○	○	○
	34	SSCNET receive error 1	34.1	SSCNET receive data error	SD	○	○ (Note 2)	○
			34.2	SSCNET connector connection error	SD	○	○	○
			34.3	SSCNET communication data error	SD	○	○	○
			34.4	Hardware error signal detection	SD	○	○	○
	35	Command frequency error	35.1	Command frequency error	SD	○	○	○
	36	SSCNET receive error 2	36.1	Continuous communication data error	SD	○	○	○
	37	Parameter error	37.1	Parameter setting range error	DB		○	○
			37.2	Parameter combination error	DB		○	○
	3A	Inrush current suppression circuit error	3A.1	Inrush current suppression circuit error	EDB			○
	3D	Parameter setting error for driver communication	3D.1	Parameter combination error for driver communication on slave	DB			○
			3D.2	Parameter combination error for driver communication on master	DB			○
	3E	Operation mode error	3E.1	Operation mode error	DB			○
	42	Servo control error (for linear servo motor and direct drive motor)	42.1	Servo control error by position deviation	EDB	○ (Note 3)	○ (Note 3)	○
			42.2	Servo control error by speed deviation	EDB	○ (Note 3)	○ (Note 3)	○
			42.3	Servo control error by torque/thrust deviation	EDB	○ (Note 3)	○ (Note 3)	○
		Fully closed loop control error (during fully closed loop control)	42.8	Fully closed loop control error by position deviation	EDB	○ (Note 3)	○ (Note 3)	○
			42.9	Fully closed loop control error by speed deviation	EDB	○ (Note 3)	○ (Note 3)	○
			42.A	Fully closed loop control error by position deviation during command stop	EDB	○ (Note 3)	○ (Note 3)	○
	45	Main circuit device overheat (Note 1)	45.1	Main circuit device overheat error	SD	○ (Note 1)	○ (Note 1)	○ (Note 1)
	46	Servo motor overheat (Note 1)	46.1	Abnormal temperature of servo motor 1	SD	○ (Note 1)	○ (Note 1)	○ (Note 1)
			46.2	Abnormal temperature of servo motor 2	SD	○ (Note 1)	○ (Note 1)	○ (Note 1)
			46.3	Thermistor disconnected error	SD	○ (Note 1)	○ (Note 1)	○ (Note 1)
			46.5	Abnormal temperature of servo motor 3	DB	○ (Note 1)	○ (Note 1)	○ (Note 1)
			46.6	Abnormal temperature of servo motor 4	DB	○ (Note 1)	○ (Note 1)	○ (Note 1)
	47	Cooling fan error	47.1	Cooling fan stop error	SD			○
			47.2	Cooling fan speed reduction error	SD			○
	50	Overload 1 (Note 1)	50.1	Thermal overload error 1 during operation	SD	○ (Note 1)	○ (Note 1)	○ (Note 1)
			50.2	Thermal overload error 2 during operation	SD	○ (Note 1)	○ (Note 1)	○ (Note 1)
			50.3	Thermal overload error 4 during operation	SD	○ (Note 1)	○ (Note 1)	○ (Note 1)
			50.4	Thermal overload error 1 during a stop	SD	○ (Note 1)	○ (Note 1)	○ (Note 1)
			50.5	Thermal overload error 2 during a stop	SD	○ (Note 1)	○ (Note 1)	○ (Note 1)
			50.6	Thermal overload error 4 during a stop	SD	○ (Note 1)	○ (Note 1)	○ (Note 1)

	No.	Name	Detail number	Detail name	Stop method (Note 4, 5)	Alarm reset		
						Error reset	CPU reset	Power off → on
Alarm	51	Overload 2 (Note 1)	51.1	Thermal overload error 3 during operation	DB	○ (Note 1)	○ (Note 1)	○ (Note 1)
			51.2	Thermal overload error 3 during a stop	DB	○ (Note 1)	○ (Note 1)	○ (Note 1)
	52	Error excessive	52.1	Excess droop pulse 1	SD	○	○	○
			52.3	Excess droop pulse 2	SD	○	○	○
			52.4	Error excessive during 0 torque limit	SD	○	○	○
			52.5	Excess droop pulse 3	EDB	○	○	○
	54	Oscillation detection	54.1	Oscillation detection error	EDB	○	○	○
	56	Forced stop error	56.2	Over speed during forced stop	EDB	○	○	○
			56.3	Estimated distance over during forced stop	EDB	○	○	○
	63	STO timing error	63.1	STO1 off	DB	○	○	○
			63.2	STO2 off	DB	○	○	○
	70	Load-side encoder initial communication error 1	70.1	Load-side encoder initial communication - Receive data error 1	DB			○
			70.2	Load-side encoder initial communication - Receive data error 2	DB			○
			70.3	Load-side encoder initial communication - Receive data error 3	DB			○
			70.5	Load-side encoder initial communication - Transmission data error 1	DB			○
			70.6	Load-side encoder initial communication - Transmission data error 2	DB			○
			70.7	Load-side encoder initial communication - Transmission data error 3	DB			○
			70.A	Load-side encoder initial communication - Process error 1	DB			○
			70.B	Load-side encoder initial communication - Process error 2	DB			○
			70.C	Load-side encoder initial communication - Process error 3	DB			○
			70.D	Load-side encoder initial communication - Process error 4	DB			○
			70.E	Load-side encoder initial communication - Process error 5	DB			○
			70.F	Load-side encoder initial communication - Process error 6	DB			○

	No.	Name	Detail number	Detail name	Stop method (Note 4, 5)	Alarm reset		
						Error reset	CPU reset	Power off → on
Alarm	71	Load-side encoder normal communication error 1	71.1	Load-side encoder communication - Receive data error 1	EDB			○
			71.2	Load-side encoder communication - Receive data error 2	EDB			○
			71.3	Load-side encoder communication - Receive data error 3	EDB			○
			71.5	Load-side encoder communication - Transmission data error 1	EDB			○
			71.6	Load-side encoder communication - Transmission data error 2	EDB			○
			71.7	Load-side encoder communication - Transmission data error 3	EDB			○
			71.9	Load-side encoder communication - Transmission data error 4	EDB			○
			71.A	Load-side encoder communication - Transmission data error 5	EDB			○
	72	Load-side encoder normal communication error 2	72.1	Load-side encoder data error 1	EDB			○
			72.2	Load-side encoder data update error	EDB			○
			72.3	Load-side encoder data waveform error	EDB			○
			72.4	Load-side encoder non-signal error	EDB			○
			72.5	Load-side encoder hardware error 1	EDB			○
			72.6	Load-side encoder hardware error 2	EDB			○
			72.9	Load-side encoder data error 2	EDB			○
	82	Master-slave operation error 1	82.1	Master-slave operation error 1	EDB	○	○	○
	8A	USB communication time-out error	8A.1	USB communication time-out error	SD	○	○	○
	8E	USB communication error	8E.1	USB communication receive error	SD	○	○	○
			8E.2	USB communication checksum error	SD	○	○	○
			8E.3	USB communication character error	SD	○	○	○
			8E.4	USB communication command error	SD	○	○	○
			8E.5	USB communication data number error	SD	○	○	○
	888	Watchdog	88._	Watchdog	DB			○

Note 1. Leave for about 30 minutes of cooling time after removing the cause of occurrence.
2. In some controller communication status, the alarm factor may not be removed.
3. The alarm can be canceled by setting as follows:
・For the fully closed loop control: set [Pr. PE03] to "1 _ _ _".
・When a linear servo motor or a direct drive motor is used: set [Pr. PL04] to "1 _ _ _".
4. The following shows three stop methods of DB, EDB, and SD.
DB: Stops with dynamic brake. (Coasts for the servo amplifier without dynamic brake.)
EDB: Electronic dynamic brake stop (available with specified servo motors)
Refer to the following table for the specified servo motors. The stop method for other than the specified servo motors will be DB.

Series	Servo motor
HG-KR	HG-KR053/HG-KR13/HG-KR23/HG-KR43
HG-MR	HG-MR053/HG-MR13/HG-MR23/HG-MR43
HG-SR	HG-SR51/HG-SR52

SD: Forced stop deceleration
5. This is applicable when [Pr. PA04] is set to the initial value. The stop system of SD can be changed to DB using [Pr. PA04].
6. This alarm will occur only in the J3 compatibility mode.

	No.	Name	Detail number	Detail name	Stop method (Note 2, 3)
Warning	91	Servo amplifier overheat warning (Note 1)	91.1	Main circuit device overheat warning	
	92	Battery cable disconnection warning	92.1	Encoder battery cable disconnection warning	
			92.3	Battery degradation	
	95	STO warning	95.1	STO1 off detection	DB
			95.2	STO2 off detection	DB
	96	Home position setting warning	96.1	In-position warning at home positioning	
			96.2	Command input warning at home positioning	
	9F	Battery warning	9F.1	Low battery	
			9F.2	Battery degradation warning	
	E0	Excessive regeneration warning (Note 1)	E0.1	Excessive regeneration warning	
	E1	Overload warning 1 (Note 1)	E1.1	Thermal overload warning 1 during operation	
			E1.2	Thermal overload warning 2 during operation	
			E1.3	Thermal overload warning 3 during operation	
			E1.4	Thermal overload warning 4 during operation	
			E1.5	Thermal overload error 1 during a stop	
			E1.6	Thermal overload error 2 during a stop	
			E1.7	Thermal overload error 3 during a stop	
			E1.8	Thermal overload error 4 during a stop	
	E2	Servo motor overheat warning	E2.1	Servo motor temperature warning	
	E3	Absolute position counter warning	E3.2	Absolute position counter warning	
			E3.5	Encoder absolute positioning counter warning	
	E4	Parameter warning	E4.1	Parameter setting range error warning	
	E6	Servo forced stop warning	E6.1	Forced stop warning	SD
	E7	Controller forced stop warning	E7.1	Controller forced stop warning	SD
	E8	Cooling fan speed reduction warning	E8.1	Decreased cooling fan speed warning	
			E8.2	Cooling fan stop	
	E9	Main circuit off warning	E9.1	Servo-on signal on during main circuit off	DB
			E9.2	Bus voltage drop during low speed operation	DB
			E9.3	Ready-on signal on during main circuit off	DB
	EC	Overload warning 2 (Note 1)	EC.1	Overload warning 2	
	ED	Output watt excess warning	ED.1	Output watt excess warning	
	F0	Tough drive warning	F0.1	Instantaneous power failure tough drive warning	
			F0.3	Vibration tough drive warning	
	F2	Drive recorder - Miswriting warning	F2.1	Drive recorder - Area writing time-out warning	
			F2.2	Drive recorder - Data miswriting warning	
	F3	Oscillation detection warning	F3.1	Oscillation detection warning	

Note 1. Leave for about 30 minutes of cooling time after removing the cause of occurrence.
2. The following shows two stop methods of DB and SD.
・DB: Stops with dynamic brake. (Coasts for the servo amplifier without dynamic brake.)
・SD: Forced stop deceleration
3. This is applicable when [Pr. PA04] is set to the initial value. The stop system of SD can be changed to DB using [Pr. PA04].

8.2 Troubleshooting at power on

When the servo system does not boot and system error occurs at power on of the servo system controller, improper boot of the servo amplifier might be the cause. Check the display of the servo amplifier, and take actions according to this section.

Display	Description	Cause	Checkpoint	Action
AA	Communication with the servo system controller has disconnected.	The power of the servo system controller was turned off.	Check the power of the servo system controller.	Switch on the power of the servo system controller.
		A SSCNET III cable was disconnected.	"AA" is displayed in the corresponding axis and following axes.	Replace the SSCNET III cable of the corresponding axis.
			Check if the connectors (CNIA, CNIB) are unplugged.	Connect it correctly.
		The power of the servo amplifier was turned off.	"AA" is displayed in the corresponding axis and following axes.	Check the power of the servo amplifier.
				Replace the servo amplifier of the corresponding axis.
Ab	Initialization communication with the servo system controller has not completed.	The control axis is disabled.	Check if the disabling control axis switch (SW2-2) is on.	Turn off the disabling control axis switch (SW2-2).
		The setting of the axis No. is incorrect.	Check that the other servo amplifier is not assigned to the same axis No.	Set it correctly.
		Axis No. does not match with the axis No. set to the servo system controller.	Check the setting and axis No. of the servo system controller.	Set it correctly.
		Information about the servo series has not set in the simple motion module.	Check the value set in Servo series (Pr.100) in the simple motion module.	Set it correctly.
		Communication cycle does not match.	Check the communication cycle at the servo system controller side. When using 8 axes or less: 0.222 ms When using 16 axes or less: 0.444 ms When using 32 axes or less: 0.888 ms	Set it correctly.
		A SSCNET III cable was disconnected.	"Ab" is displayed in the corresponding axis and following axes.	Replace the SSCNET III cable of the corresponding axis.
			Check if the connectors (CNIA, CNIB) are unplugged.	Connect it correctly.
		The power of the servo amplifier was turned off.	"Ab" is displayed in an axis and the following axes.	Check the power of the servo amplifier.
		The servo amplifier is malfunctioning.	"Ab" is displayed in an axis and the following axes.	Replace the servo amplifier of the corresponding axis.
Ab ↑↓ AC or → Ab → AC → Ad	Communication between servo system controller and servo amplifier are repeating connection and shut-off.	An MR-J4-_B_(-RJ) servo amplifier or MR-J4W_-_B servo amplifier which is set to J3 compatibility mode is connected to the SSCNET III/H network.	Check if "J3 compatibility mode" is set using "MR-J4(W)-B mode selection" which came with MR Configurator2.	Select "J4 mode" with "MR-J4(W)-B mode selection".
b##. (Note)	The system has been in the test operation mode.	Test operation mode has been enabled.	Test operation setting switch (SW2-1) is turned on.	Turn off the test operation setting switch (SW2-1).
off	Operation mode for manufacturer setting is set.	Operation mode for manufacturer setting is enabled.	Check if all of the control axis setting switches (SW2) are on.	Set the control axis setting switches (SW2) correctly.

Note. ## indicates axis No.

MEMO

9. OUTLINE DRAWINGS

9.1 Servo amplifier

POINT
●Only MR-J4-_B_-RJ are shown for dimensions. MR-J4-_B_ does not have CN2L, CN7 and CN9 connectors. The dimensions of MR-J4-_B_ are not different from those of MR-J4-_B_-RJ except CN2L, CN7 and CN9 connectors.

(1) 200 V class

(a) MR-J4-10B(-RJ)/MR-J4-20B(-RJ)

[Unit: mm]

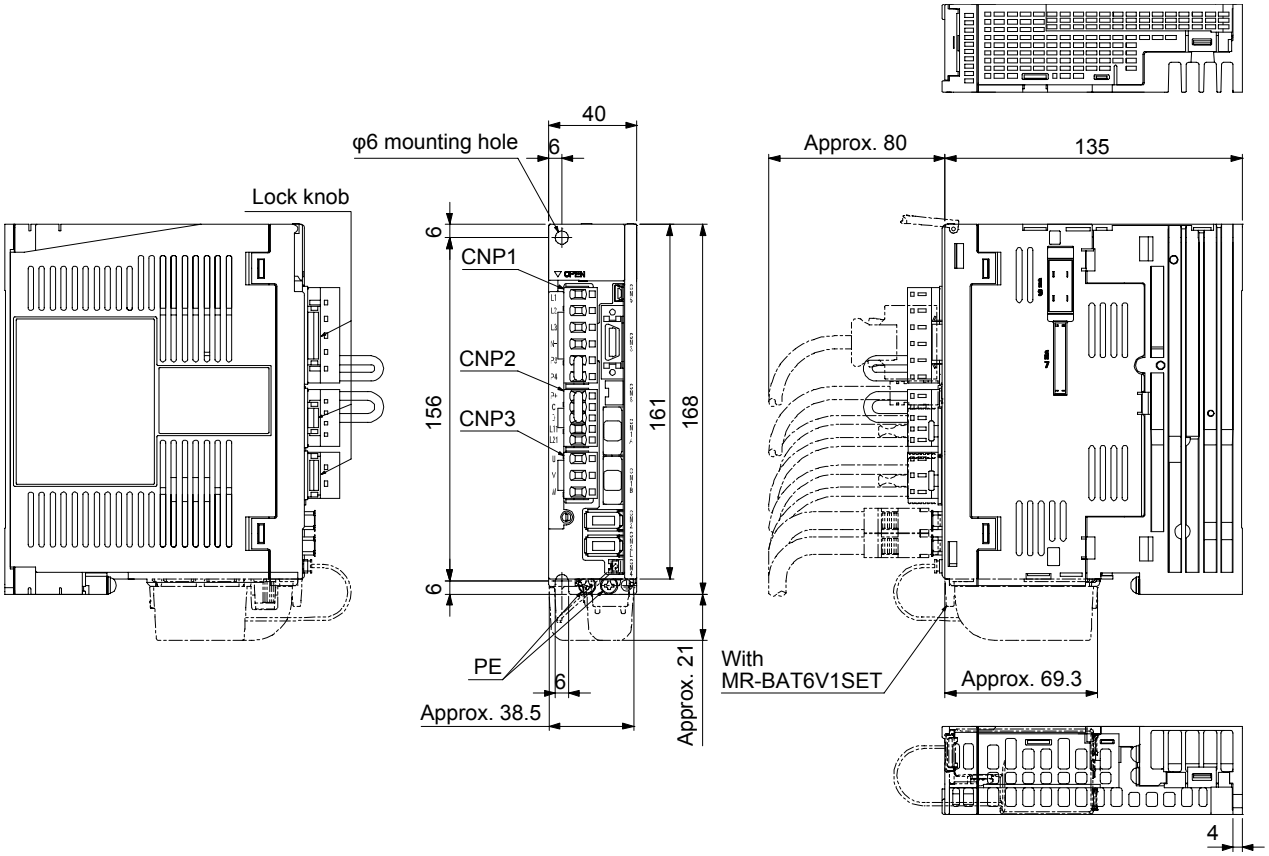

Mass: 0.8 [kg]

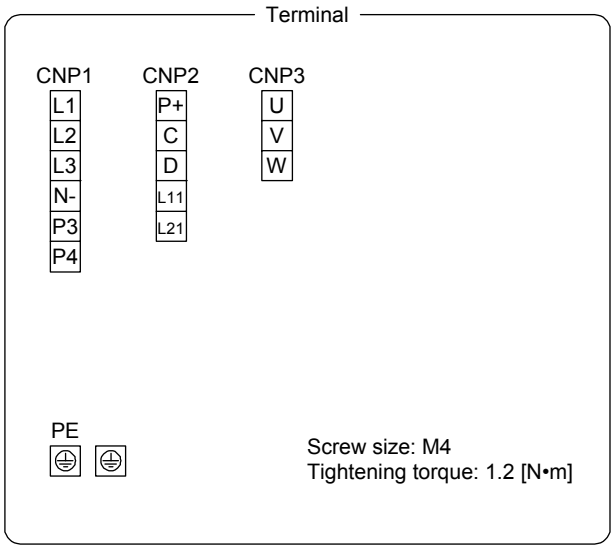

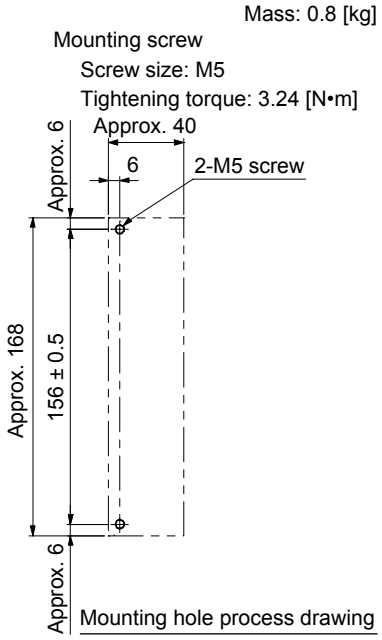

(b) MR-J4-40B(-RJ)/MR-J4-60B(-RJ)

[Unit: mm]

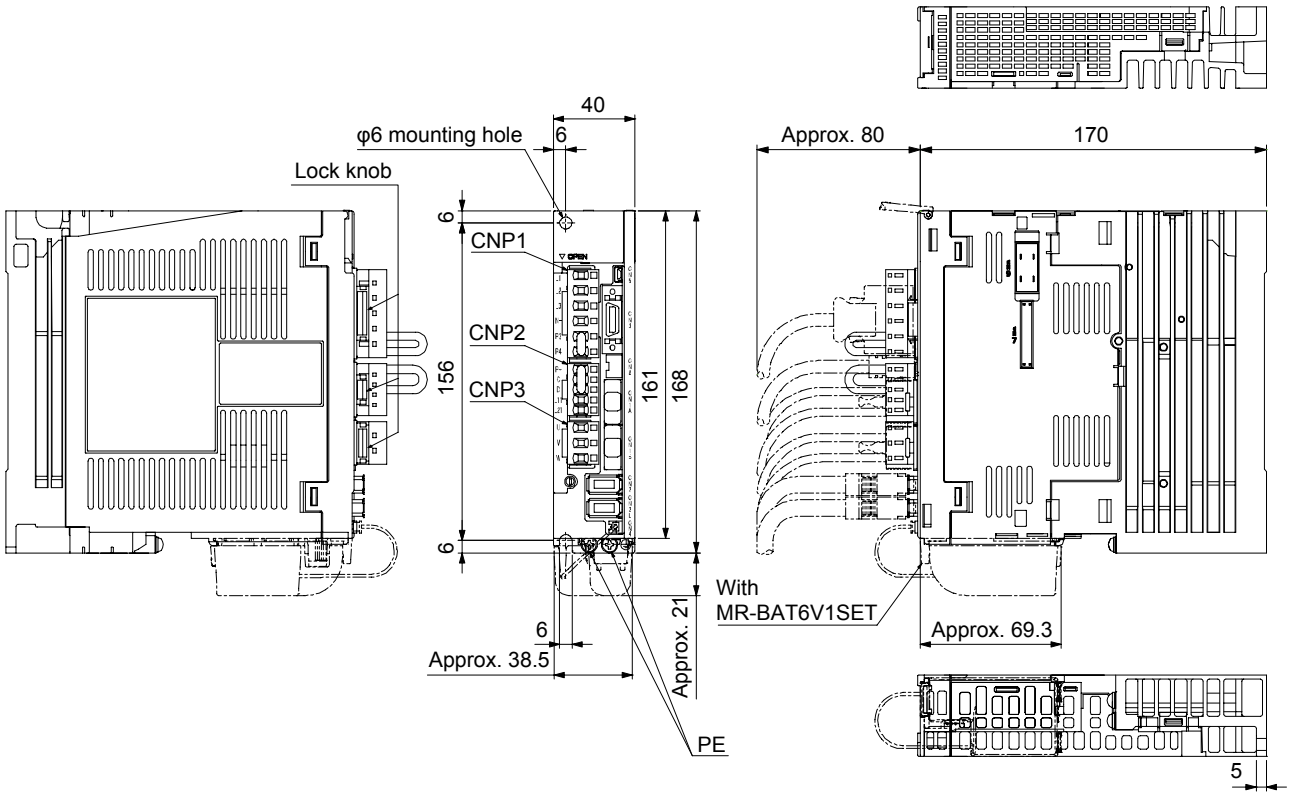

Mass: 1.0 [kg]

Terminal

CNP1	CNP2	CNP3
L1	P+	U
L2	C	V
L3	D	W
N-	L11	
P3	L21	
P4		

PE

Screw size: M4
Tightening torque: 1.2 [N•m]

Mounting screw
Screw size: M5
Tightening torque: 3.24 [N•m]

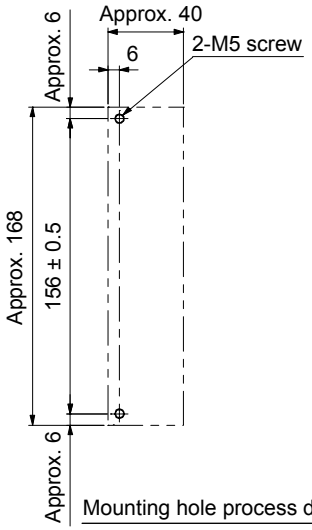

Mounting hole process drawing

(c) MR-J4-70B(-RJ)/MR-J4-100B(-RJ)

[Unit: mm]

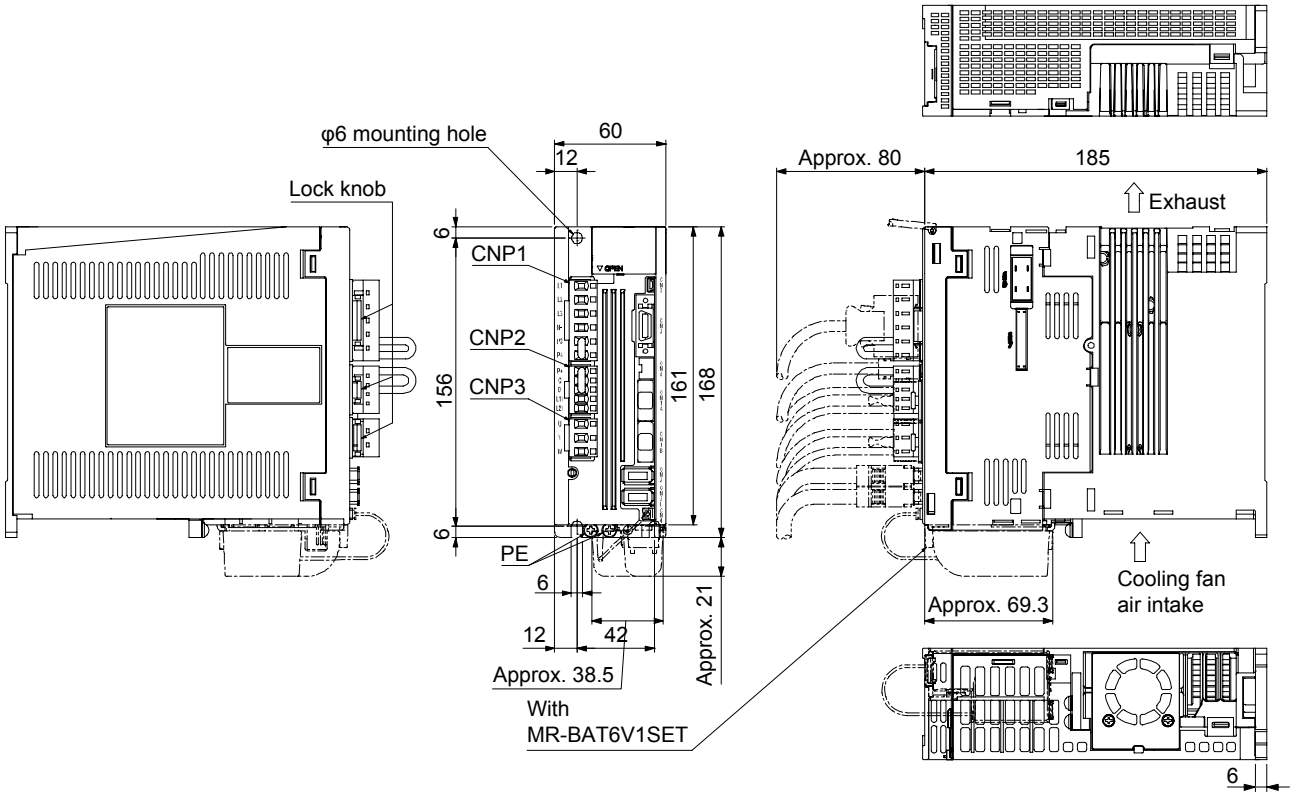

Mass: 1.4 [kg]

Mounting screw
Screw size: M5
Tightening torque: 3.24 [N•m]

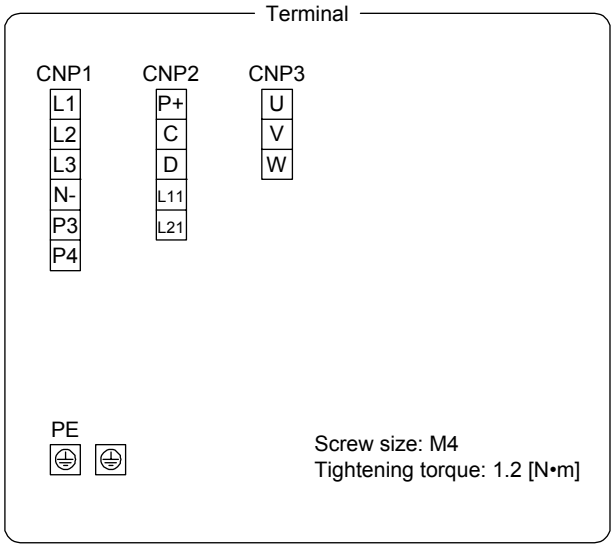

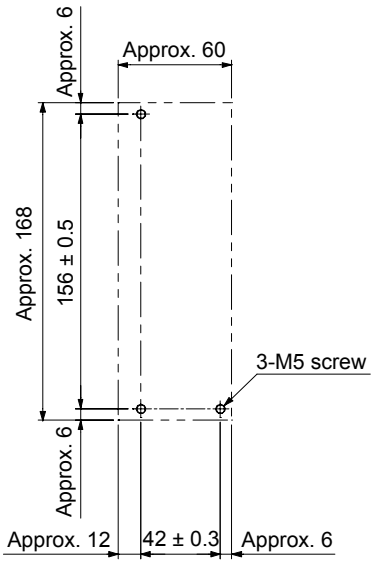

Mounting hole process drawing

(d) MR-J4-200B(-RJ)

[Unit: mm]

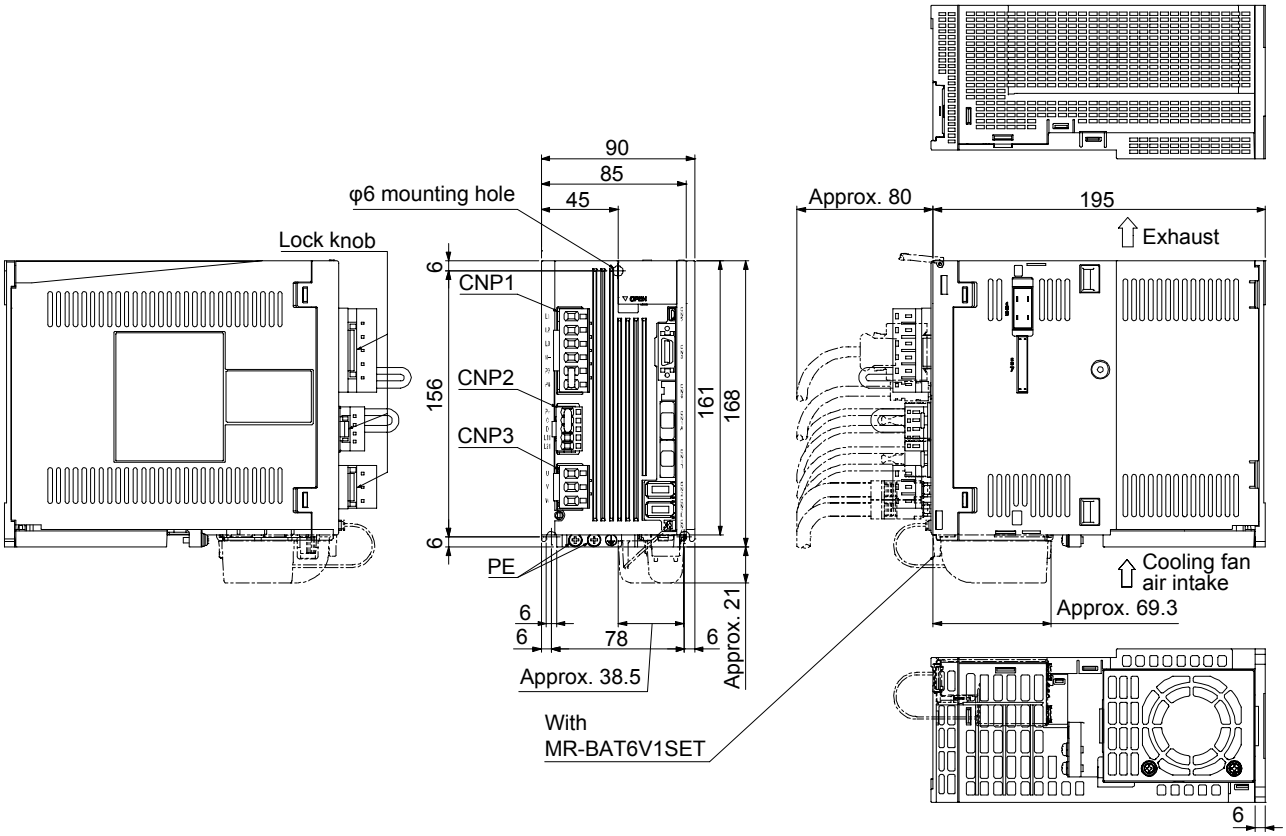

Mass: 2.1 [kg]

Mounting screw
Screw size: M5
Tightening torque: 3.24 [N•m]

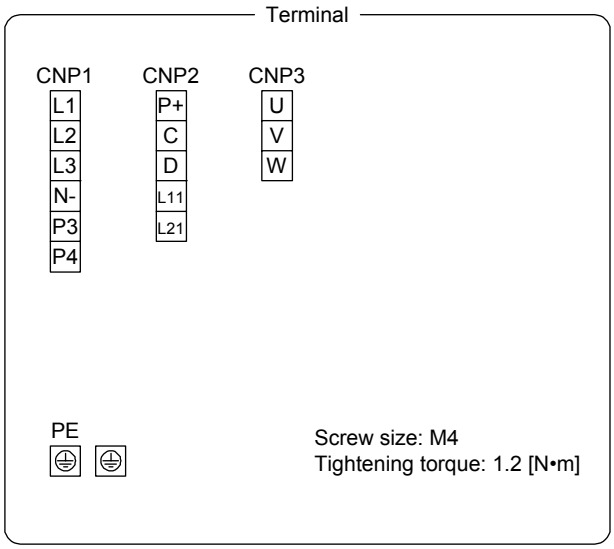

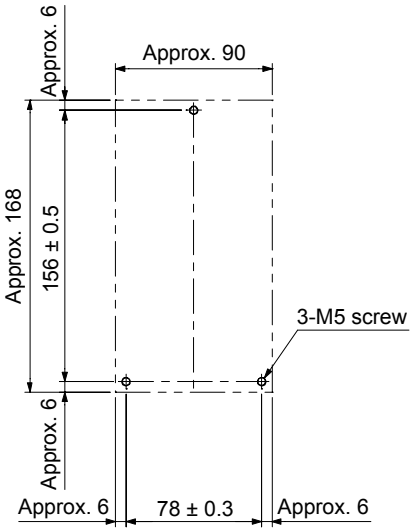

Mounting hole process drawing

(e) MR-J4-350B(-RJ)

[Unit: mm]

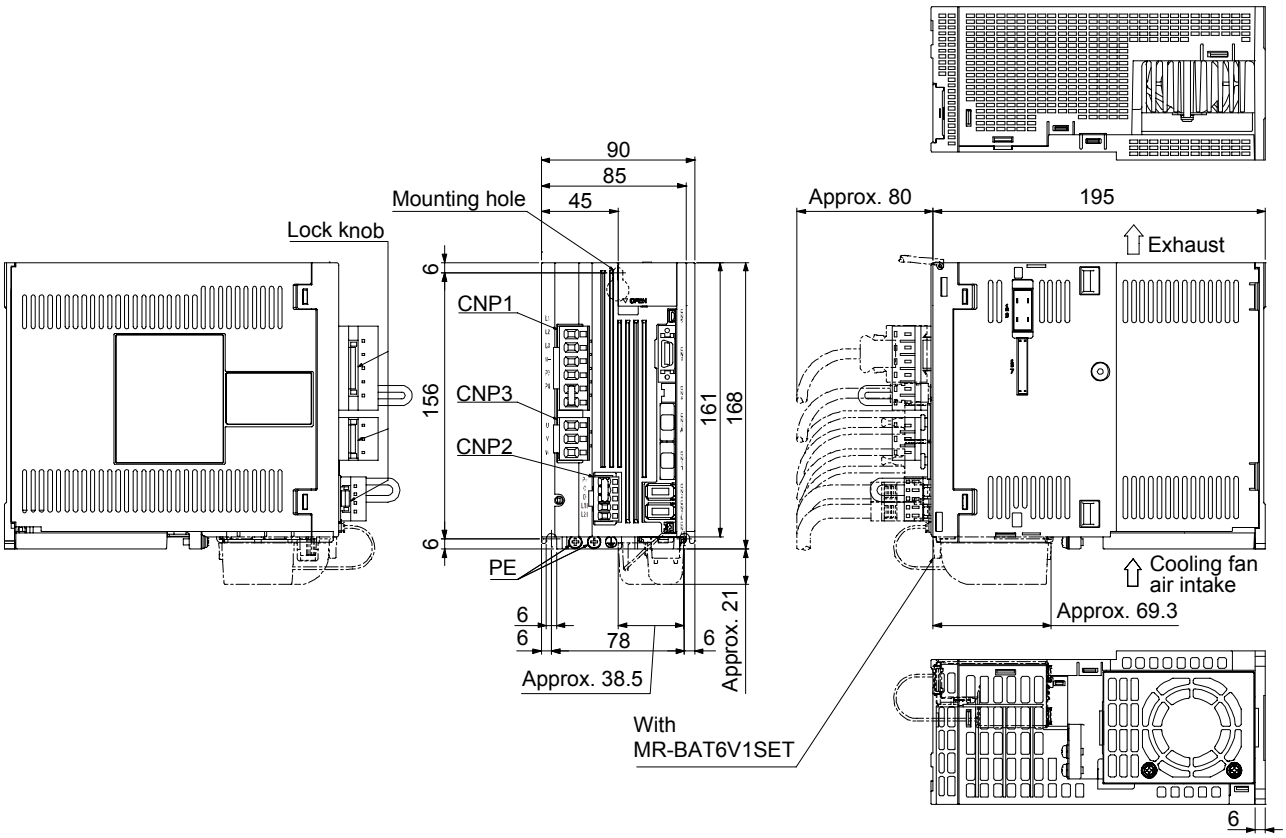

Mass: 2.3 [kg]

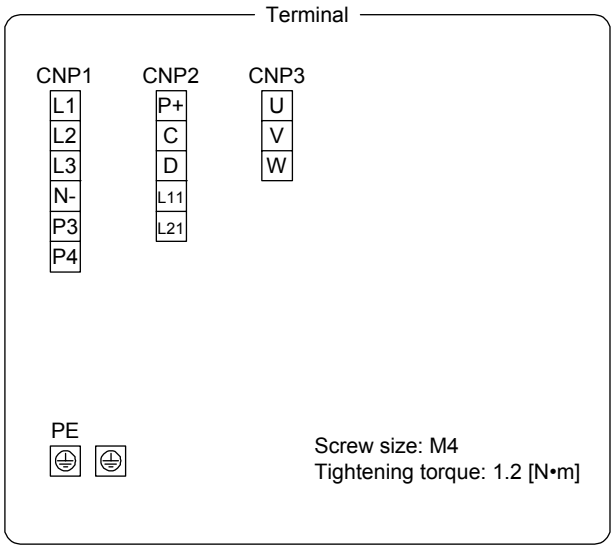

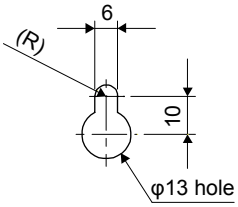

Mounting hole dimensions

Mounting screw
Screw size: M5
Tightening torque: 3.24 [N•m]

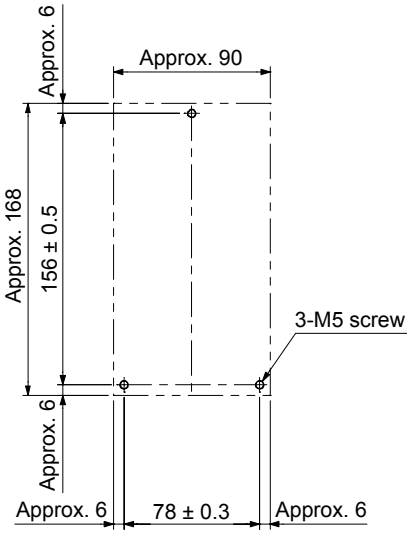

Mounting hole process drawing

(f) MR-J4-500B(-RJ)

[Unit: mm]

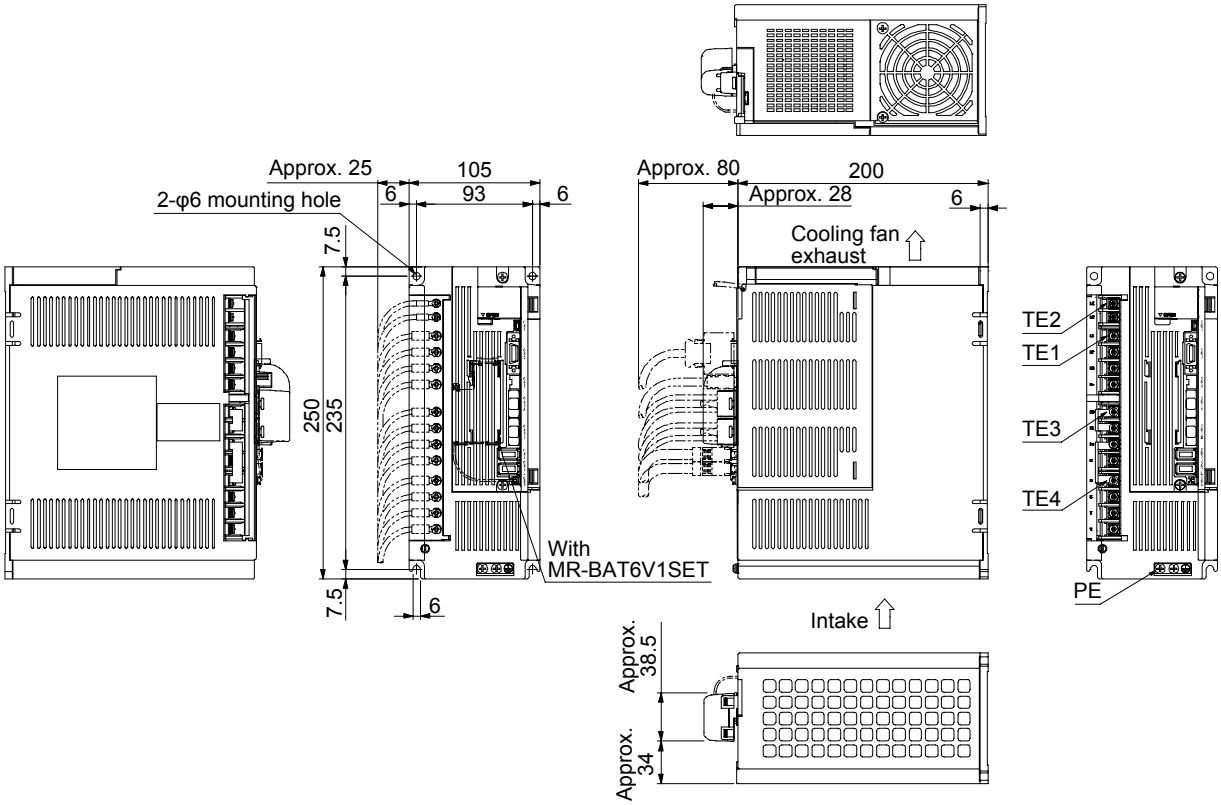

Mass: 4.0 [kg]

Terminal

TE2	L11, L21	TE2 Screw size: M3.5 Tightening torque: 0.8 [N•m]
TE1	L1, L2, L3, N-	TE1 Screw size: M4 Tightening torque: 1.2 [N•m]
TE3	P3, P4, P+, C	TE3 Screw size: M4 Tightening torque: 1.2 [N•m]
TE4	D, U, V, W	TE4 Screw size: M4 Tightening torque: 1.2 [N•m]
	PE	PE Screw size: M4 Tightening torque: 1.2 [N•m]

Mounting screw
Screw size: M5
Tightening torque: 3.24 [N•m]

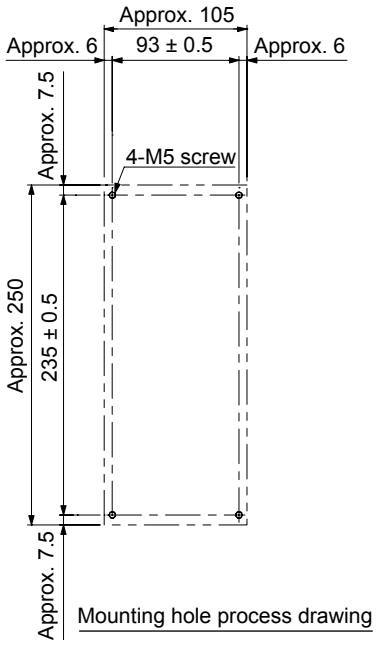

Mounting hole process drawing

(g) MR-J4-700B(-RJ)

[Unit: mm]

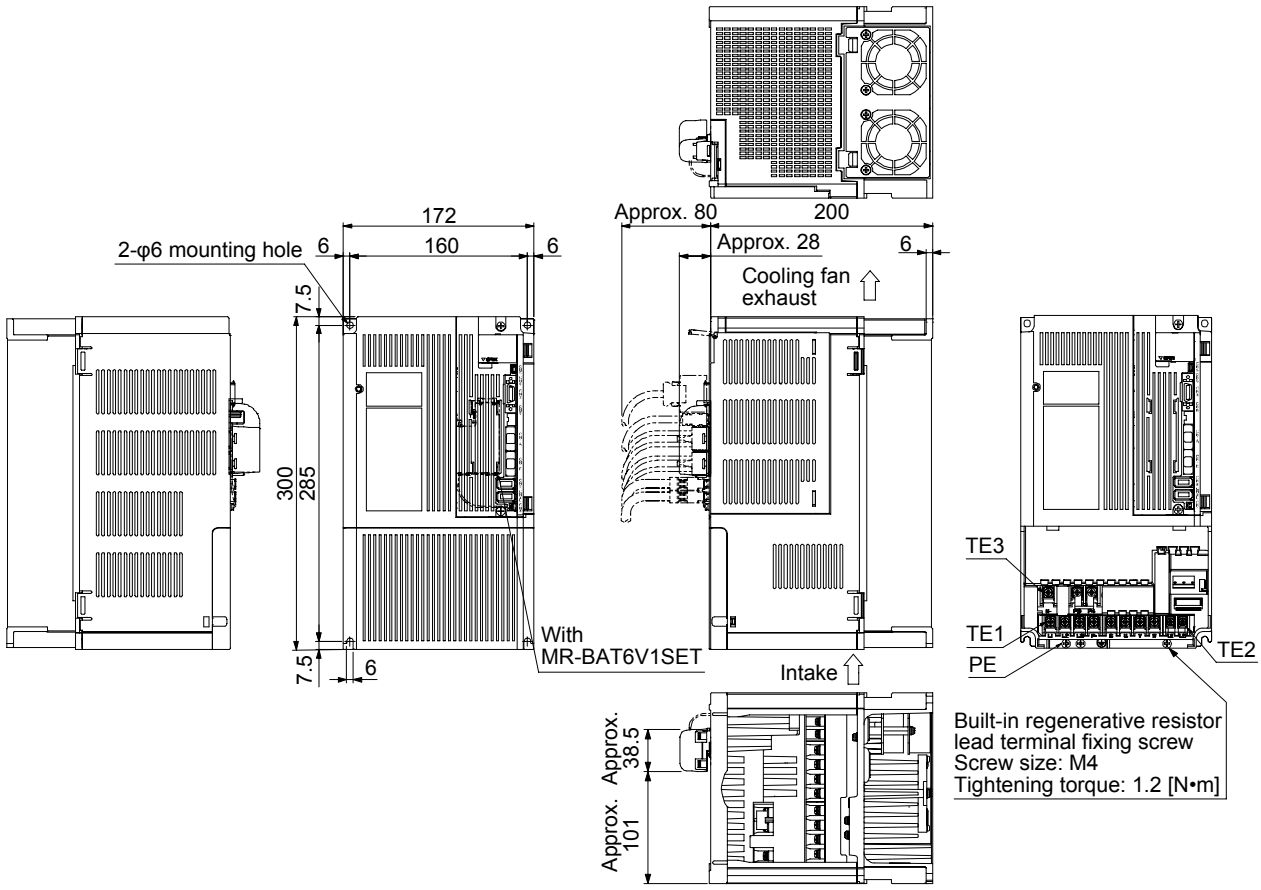

Mass: 6.2 [kg]

Mounting screw
Screw size: M5
Tightening torque: 3.24 [N•m]

Terminal

TE3 N- P3 P4

TE1 L1 L2 L3 P+ C U V W TE2 L11 L21

PE

TE3 Screw size: M4
Tightening torque: 1.2 [N•m]

TE1 Screw size: M4
Tightening torque: 1.2 [N•m]

TE2 Screw size: M3.5
Tightening torque: 0.8 [N•m]

PE Screw size: M4
Tightening torque: 1.2 [N•m]

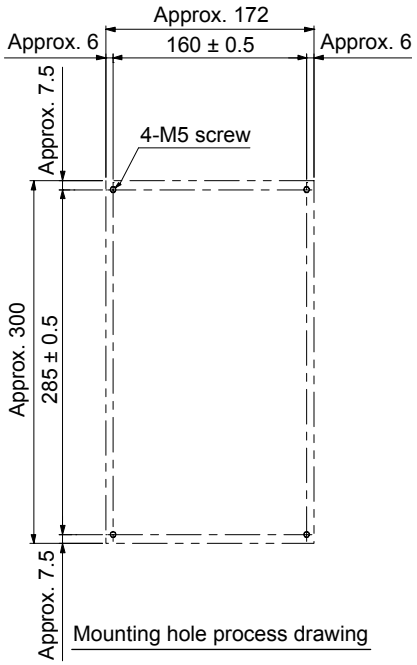

Mounting hole process drawing

(h) MR-J4-11KB(-RJ)/MR-J4-15KB(-RJ)

[Unit: mm]

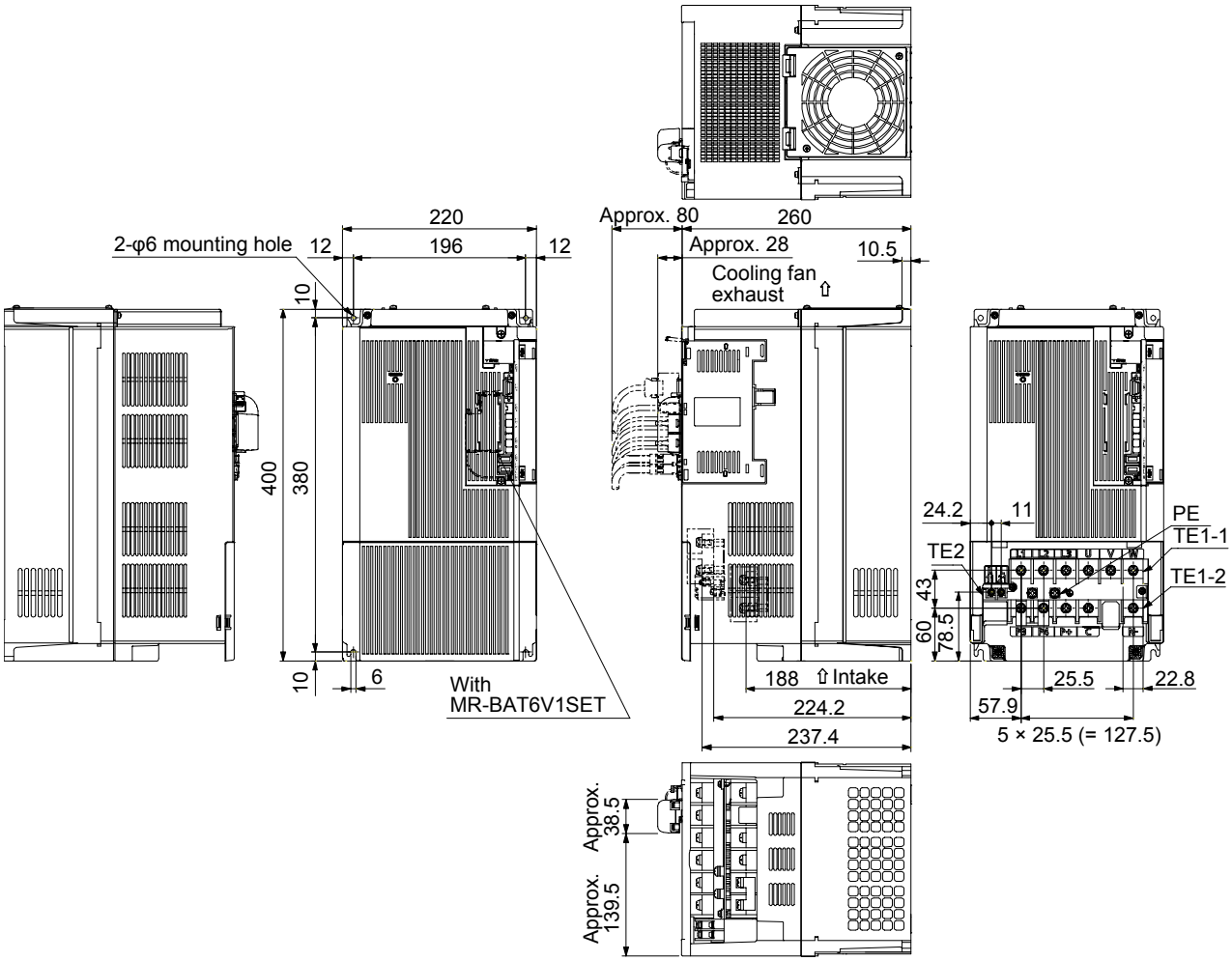

Mass: 13.4 [kg]

Terminal

TE1-1 L1 L2 L3 U V W

TE1-2 P3 P4 P+ C N-

TE2 L11 L21

PE

TE1-1 Screw size: M6
Tightening torque: 3.0 [N•m]

TE1-2 Screw size: M6
Tightening torque: 3.0 [N•m]

TE2 Screw size: M4
Tightening torque: 1.2 [N•m]

PE Screw size: M6
Tightening torque: 3.0 [N•m]

Mounting screw
Screw size: M5
Tightening torque: 3.24 [N•m]

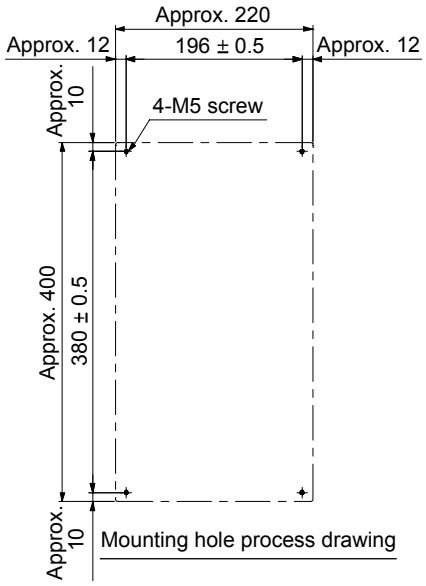

(i) MR-J4-22KB(-RJ)

[Unit: mm]

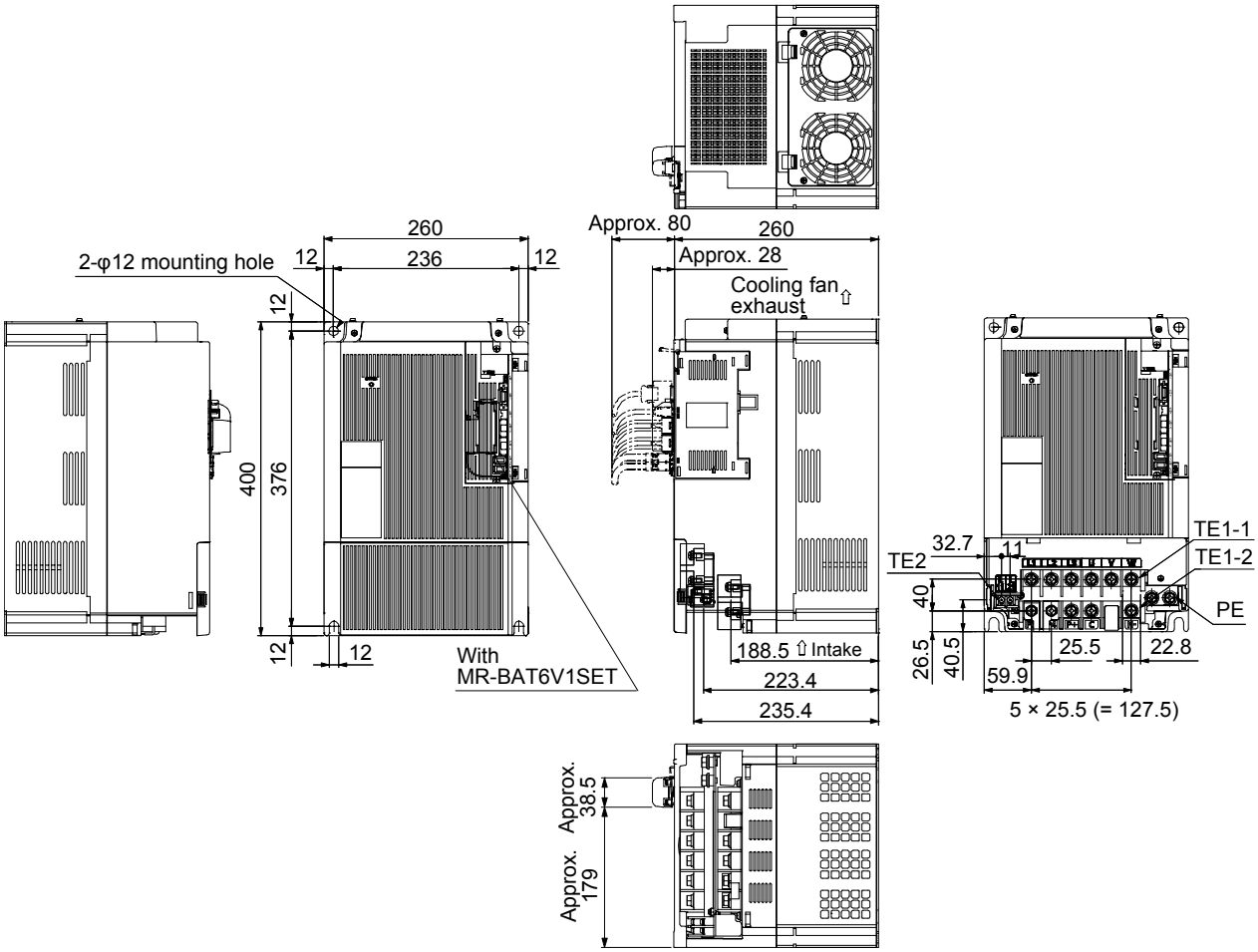

Mass: 18.2 [kg]

Mounting screw
Screw size: M10
Tightening torque: 26.5 [N•m]

Terminal

TE1-1 L1 L2 L3 U V W

TE1-2 P3 P4 P+ C N-

PE TE2 L11 L21

TE1-1 Screw size: M8
Tightening torque: 6.0 [N•m]

TE1-2 Screw size: M8
Tightening torque: 6.0 [N•m]

TE2 Screw size: M4
Tightening torque: 1.2 [N•m]

PE Screw size: M8
Tightening torque: 6.0 [N•m]

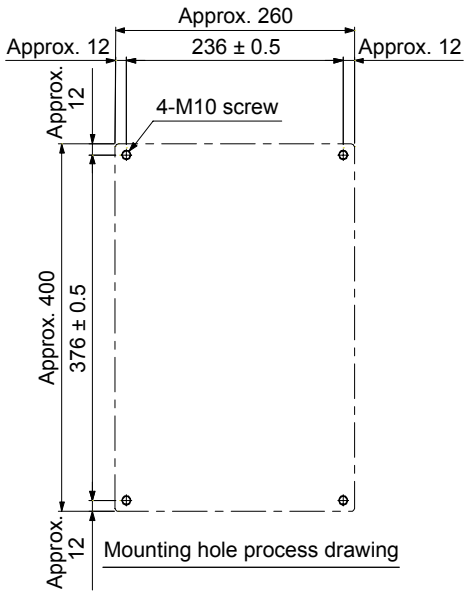

(2) 400 V class

(a) MR-J4-60B4(-RJ)/MR-J4-100B4(-RJ)

[Unit: mm]

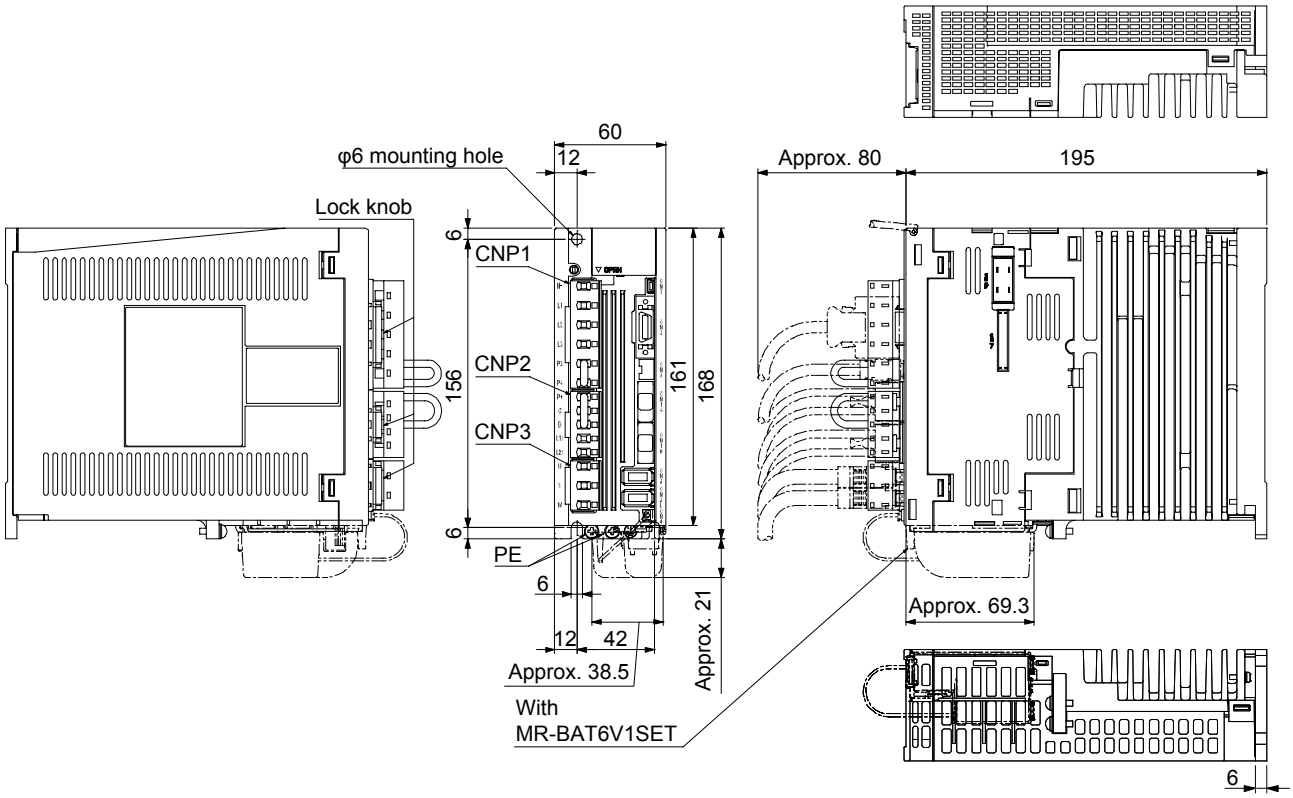

Mass: 1.7 [kg]

Terminal

CNP1

N-
L1
L2
L3
P3
P4

CNP2

P+
C
D
L11
L21

CNP3

U
V
W

PE

Screw size: M4
Tightening torque: 1.2 [N•m]

Mounting screw
Screw size: M5
Tightening torque: 3.24 [N•m]

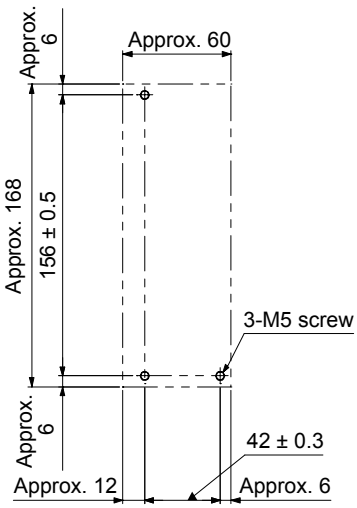

Mounting hole process drawing

(b) MR-J4-200B4(-RJ)

[Unit: mm]

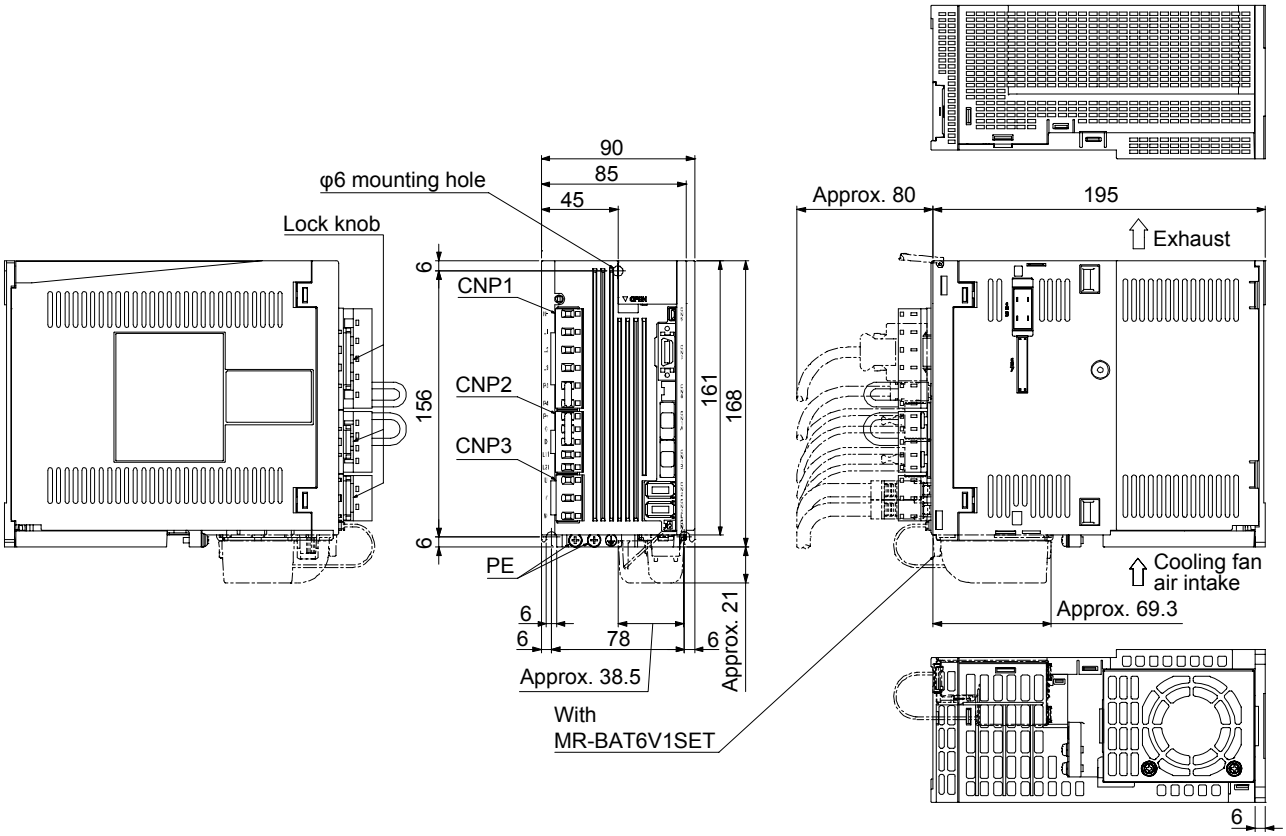

Mass: 2.1 [kg]

Mounting screw
Screw size: M5
Tightening torque: 3.24 [N•m]

Terminal

CNP1
N-
L1
L2
L3
P3
P4

CNP2
P+
C
D
L11
L21

CNP3
U
V
W

PE

Screw size: M4
Tightening torque: 1.2 [N•m]

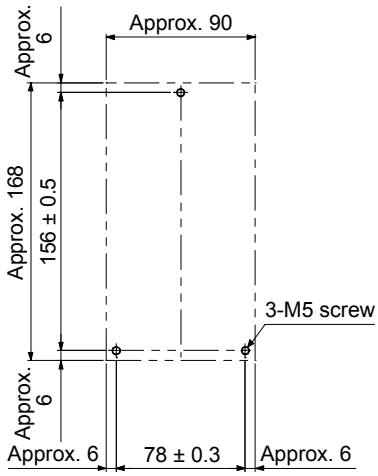

Mounting hole process drawing

(c) MR-J4-350B4(-RJ)

[Unit: mm]

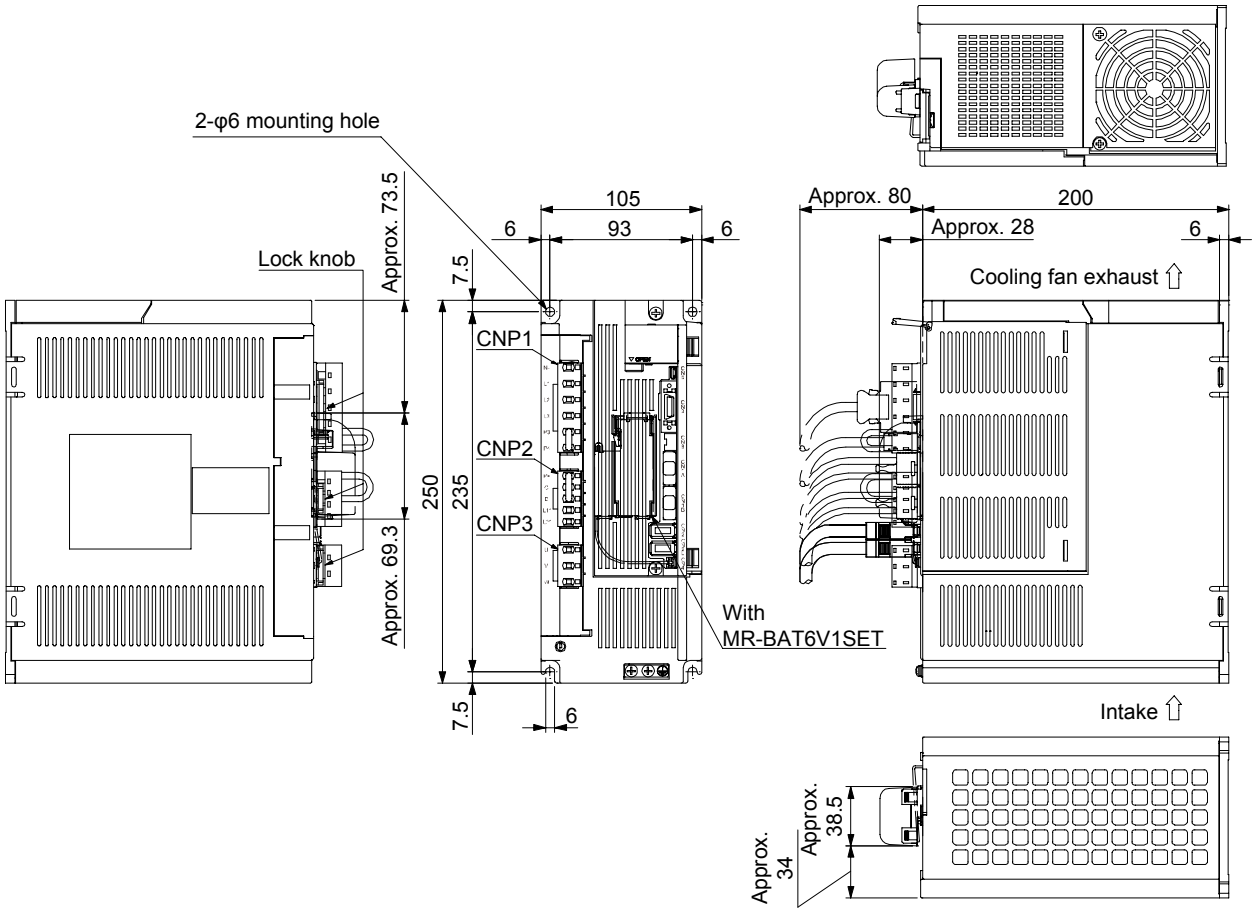

Mass: 3.6 [kg]

Mounting screw
Screw size: M5
Tightening torque: 3.24 [N•m]

Terminal

CNP1
N-
L1
L2
L3
P3
P4

CNP2
P+
C
D
L11
L21

CNP3
U
V
W

PE

Screw size: M4
Tightening torque: 1.2 [N•m]

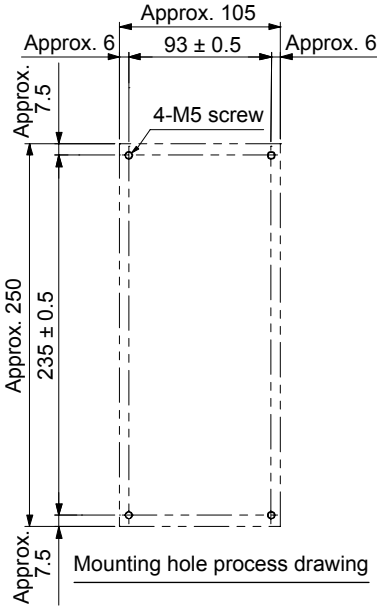

Mounting hole process drawing

(d) MR-J4-500B4(-RJ)

[Unit: mm]

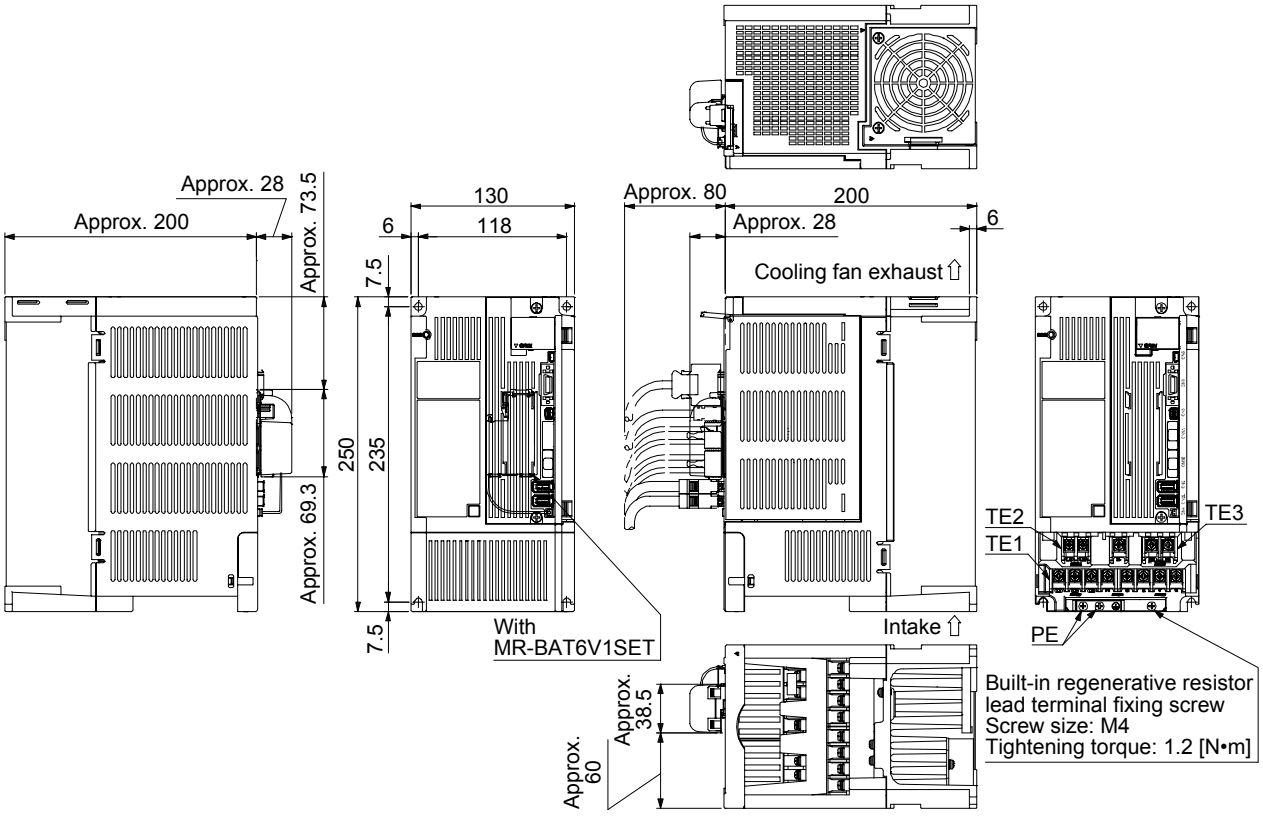

Mass: 4.3 [kg]

Mounting screw
Screw size: M5
Tightening torque: 3.24 [N•m]

Terminal

TE2 L11 L21 TE3 N- P3 P4

TE1 L1 L2 L3 P+ C U V W

PE

TE2 Terminal screw: M3.5
Tightening torque: 0.8 [N•m]

TE3 Terminal screw: M4
Tightening torque: 1.2 [N•m]

TE1 Terminal screw: M4
Tightening torque: 1.2 [N•m]

PE Screw size: M4
Tightening torque: 1.2 [N•m]

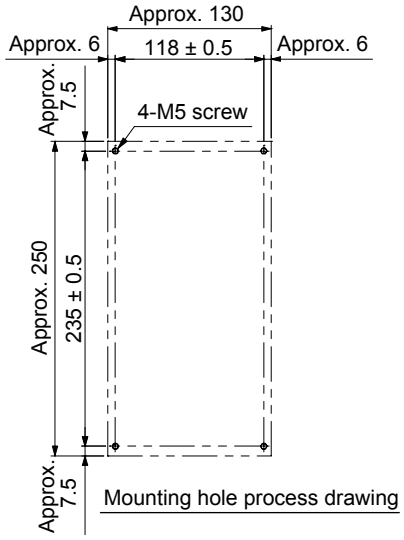

(e) MR-J4-700B4(-RJ)

[Unit: mm]

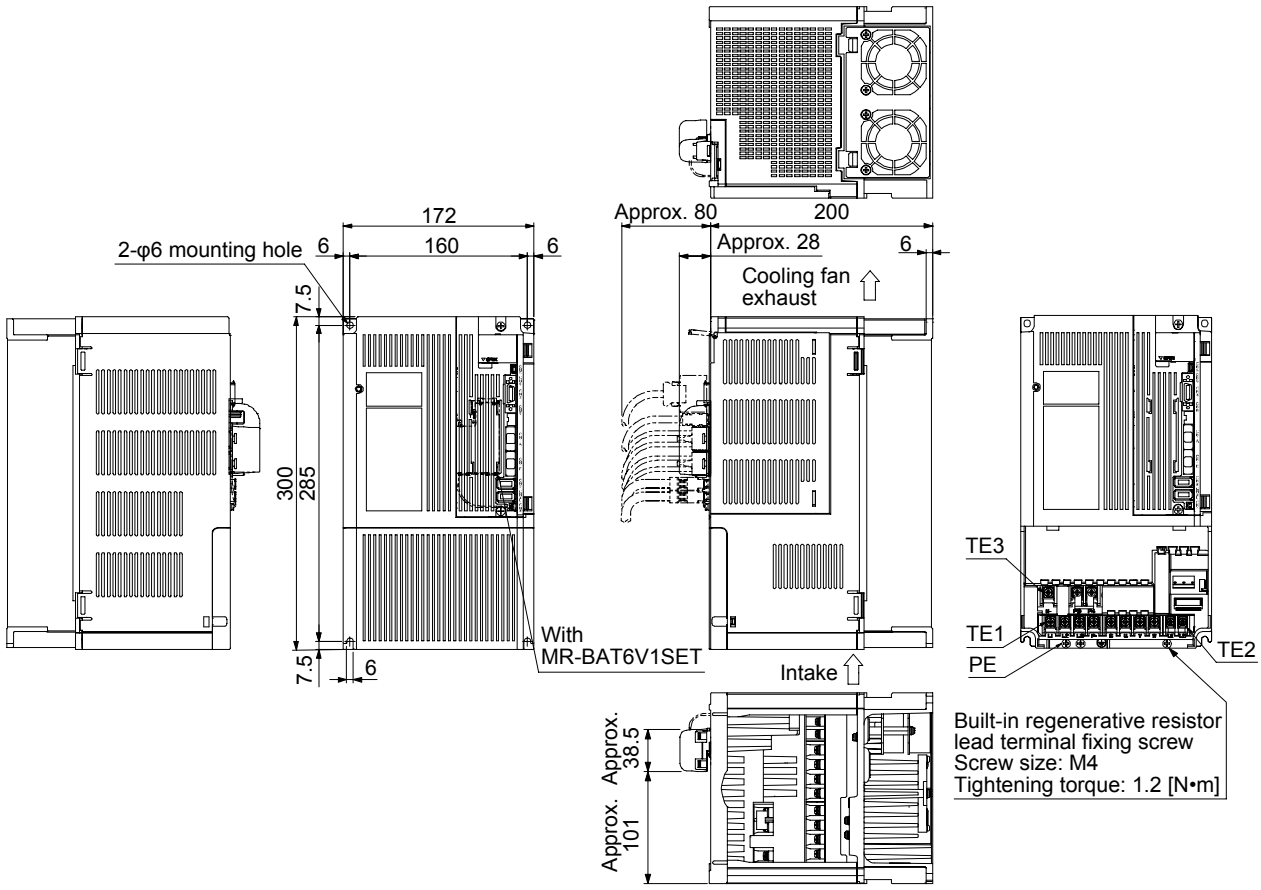

Mass: 6.5 [kg]

Mounting screw
Screw size: M5
Tightening torque: 3.24 [N•m]

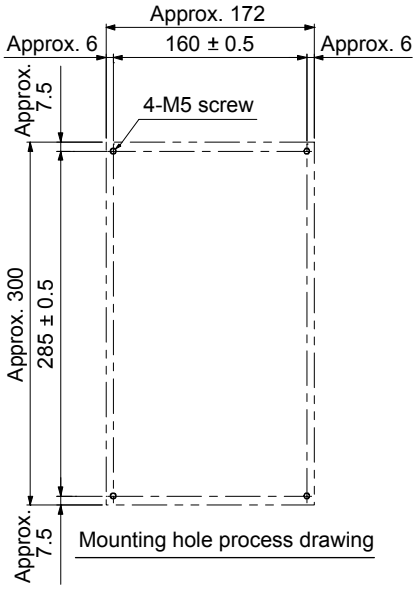

Terminal

TE3 N- P3 P4

TE1 L1 L2 L3 P+ C U V W TE2 L11 L21

PE ⏚ ⏚

TE3 Screw size: M4
Tightening torque: 1.2 [N•m]

TE1 Screw size: M4
Tightening torque: 1.2 [N•m]

TE2 Screw size: M3.5
Tightening torque: 0.8 [N•m]

PE Screw size: M4
Tightening torque: 1.2 [N•m]

(f) MR-J4-11KB4(-RJ)/MR-J4-15KB4(-RJ)

[Unit: mm]

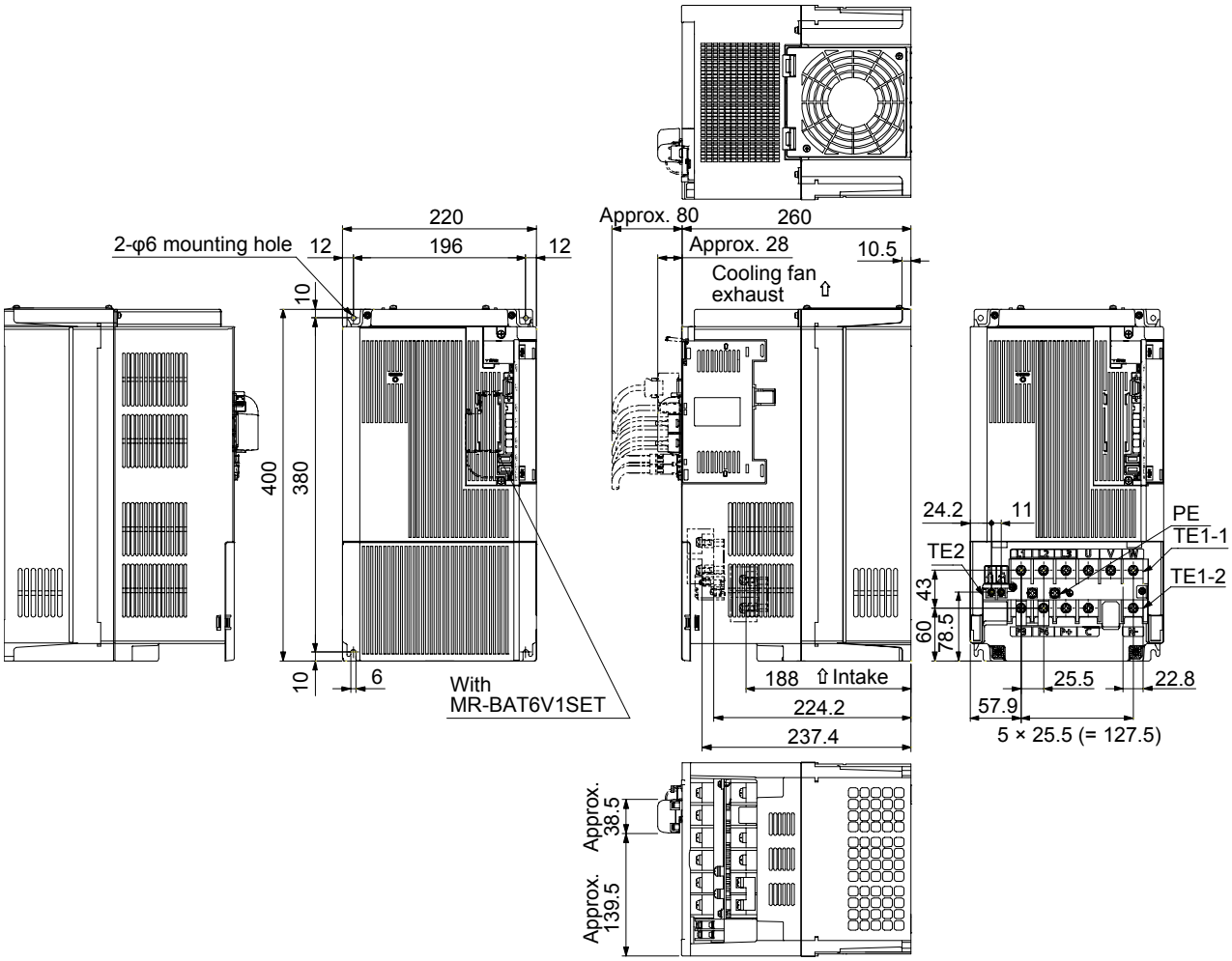

Mass: 13.4 [kg]

Terminal

TE1-1 L1 L2 L3 U V W

TE1-2 P3 P4 P+ C N-

TE2 L11 L21

PE

TE1-1 Screw size: M6
Tightening torque: 3.0 [N•m]

TE1-2 Screw size: M6
Tightening torque: 3.0 [N•m]

TE2 Screw size: M4
Tightening torque: 1.2 [N•m]

PE Screw size: M6
Tightening torque: 3.0 [N•m]

Mounting screw
Screw size: M5
Tightening torque: 3.24 [N•m]

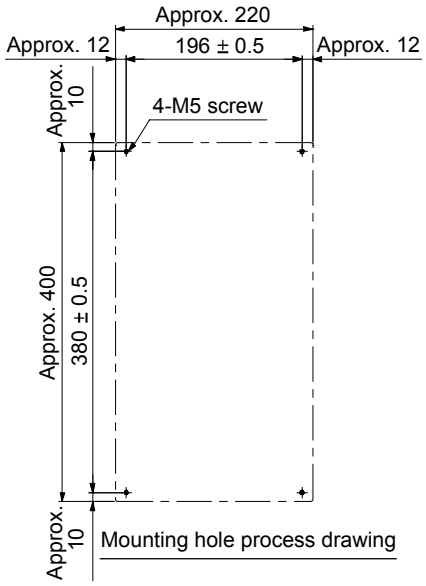

(g) MR-J4-22KB4(-RJ)

[Unit: mm]

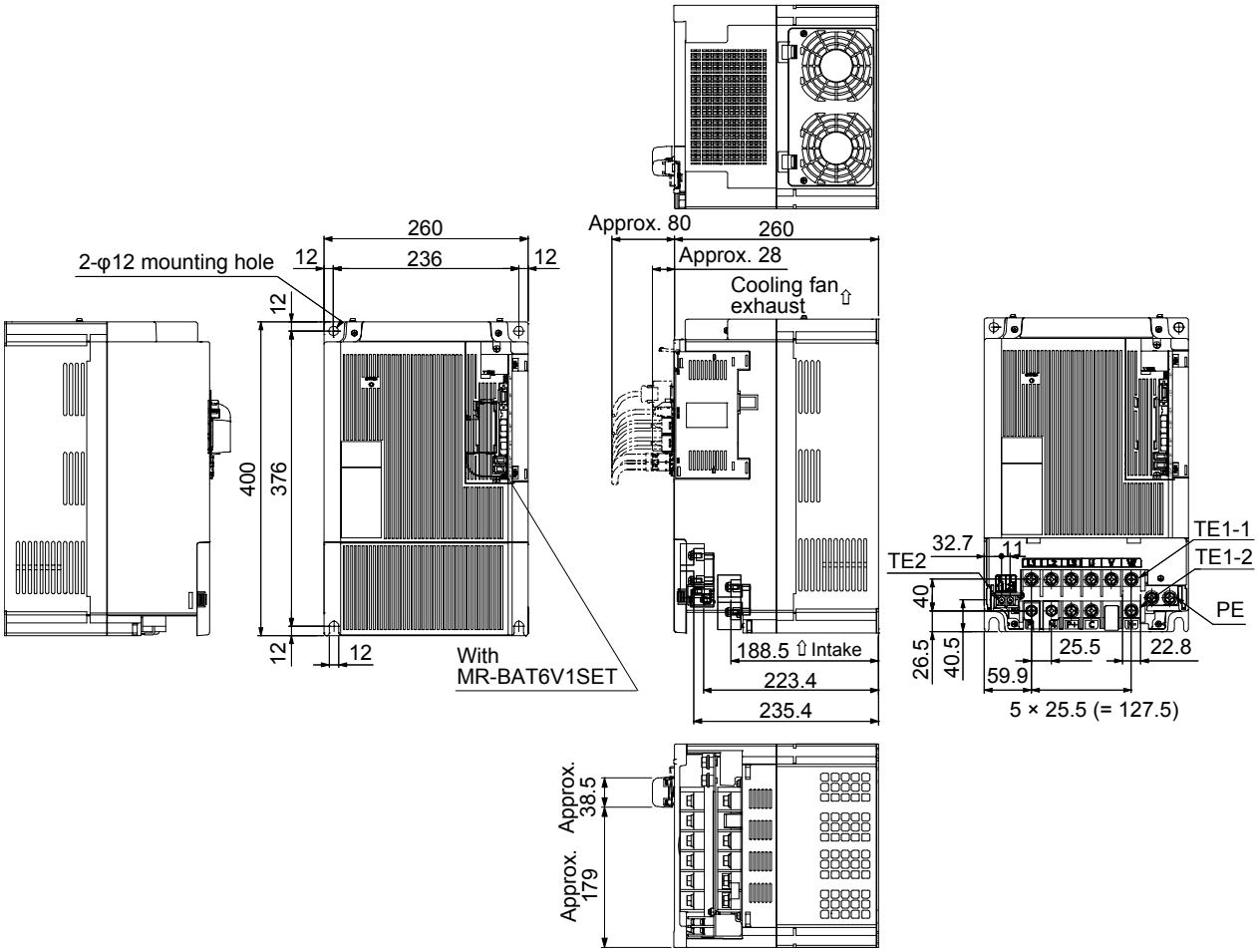

Mass: 18.2 [kg]

Mounting screw
Screw size: M10
Tightening torque: 26.5 [N•m]

Terminal

TE1-1 L1 L2 L3 U V W

TE1-2 P3 P4 P+ C N-

PE ⏚ ⏚ TE2 L11 L21

TE1-1 Screw size: M8
Tightening torque: 6.0 [N•m]

TE1-2 Screw size: M8
Tightening torque: 6.0 [N•m]

TE2 Screw size: M4
Tightening torque: 1.2 [N•m]

PE Screw size: M8
Tightening torque: 6.0 [N•m]

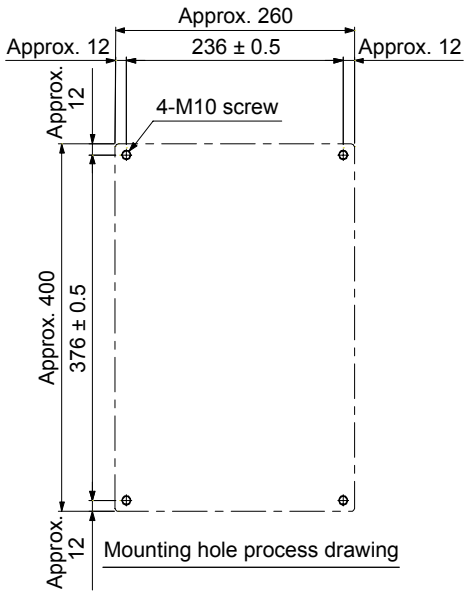

(3) 100 V class

(a) MR-J4-10B1(-RJ)/MR-J4-20B1(-RJ)

[Unit: mm]

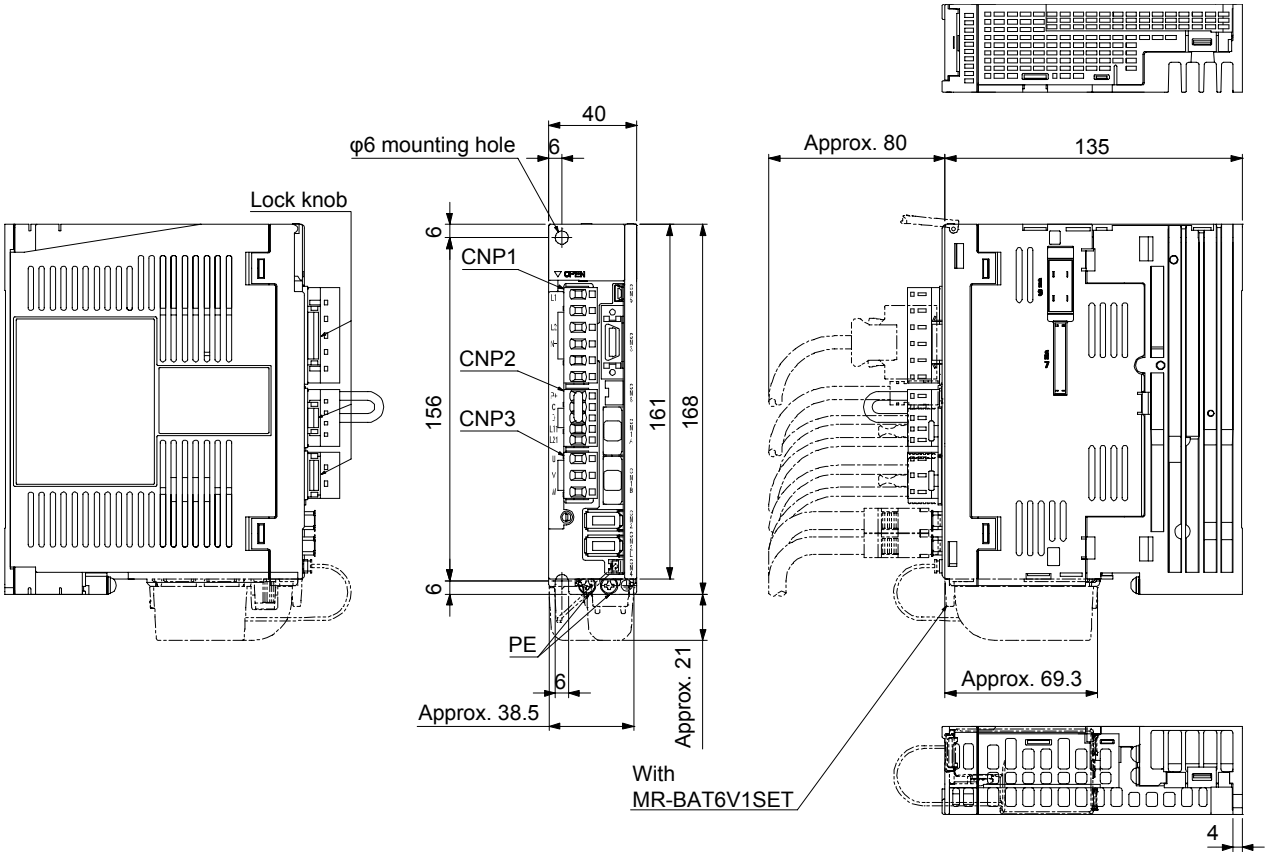

Mass: 0.8 [kg]

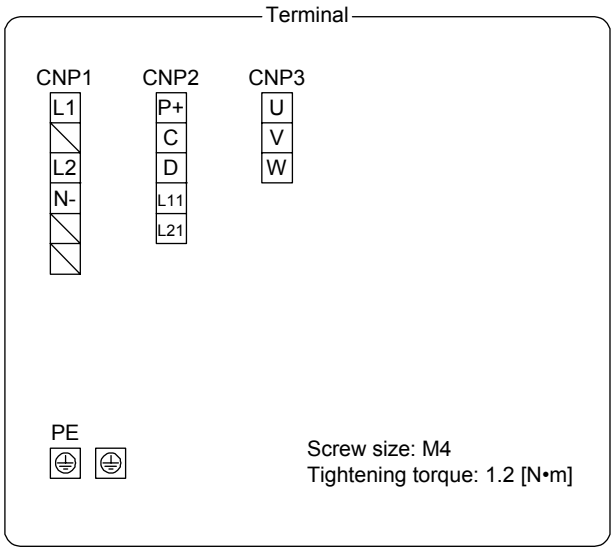

Mounting screw
Screw size: M5
Tightening torque: 3.24 [N•m]

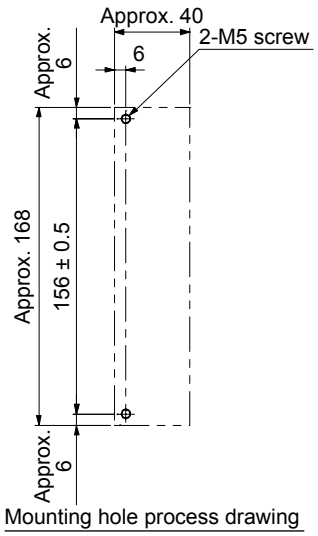

Mounting hole process drawing

(b) MR-J4-40B1(-RJ)

[Unit: mm]

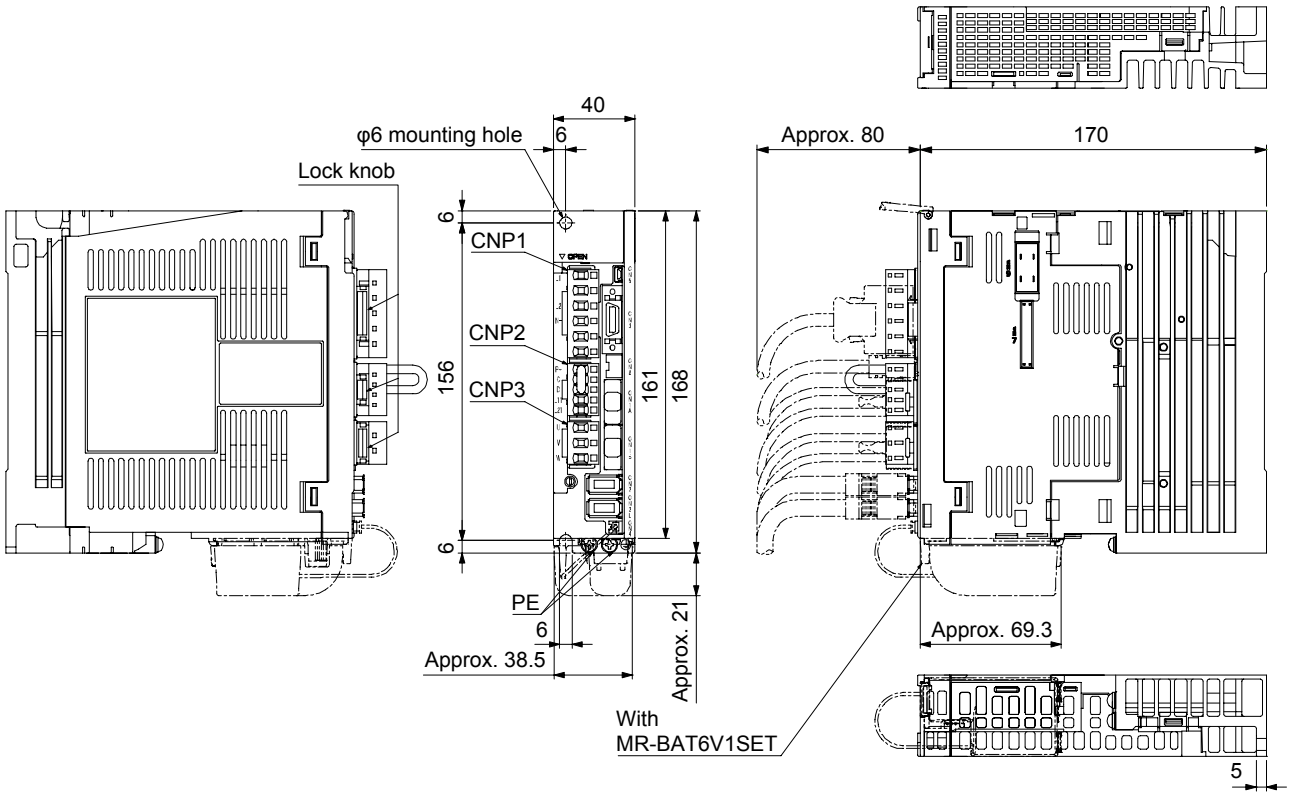

Mass: 1.0 [kg]

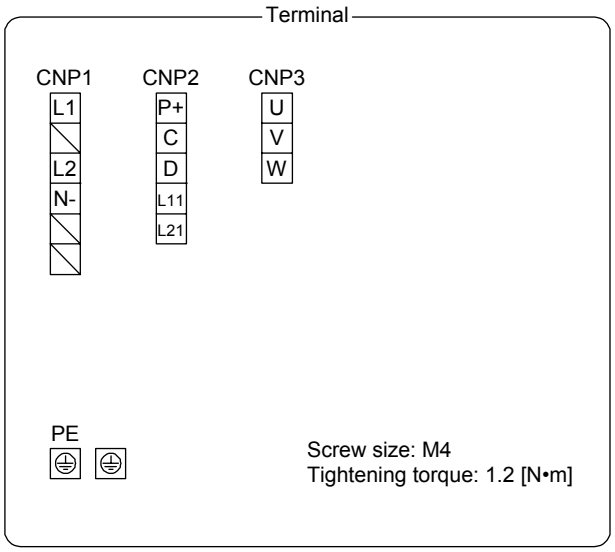

Mounting screw
Screw size: M5
Tightening torque: 3.24 [N•m]

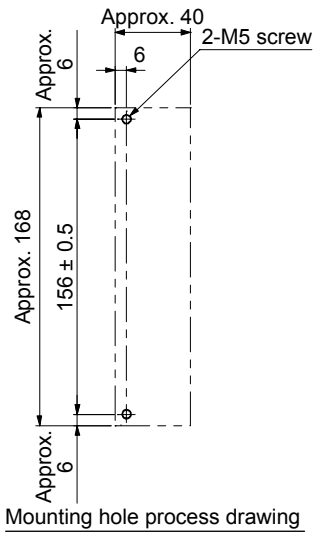

Mounting hole process drawing

9.2 Connector

(1) CN1A/CN1B connector

[Unit: mm]

F0-PF2D103

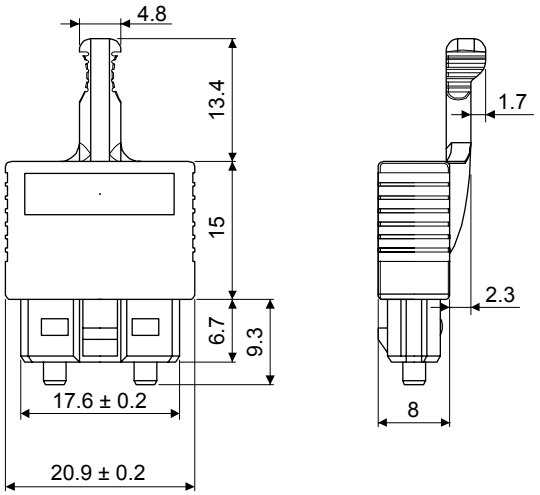

F0-PF2D103-S

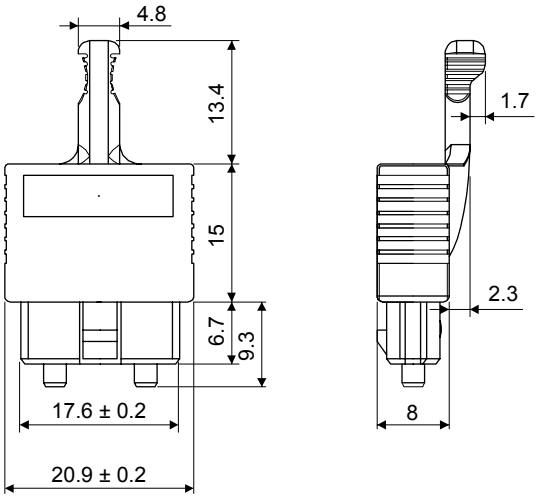

(2) Miniature delta ribbon (MDR) system (3M)

(a) One-touch lock type

[Unit: mm]

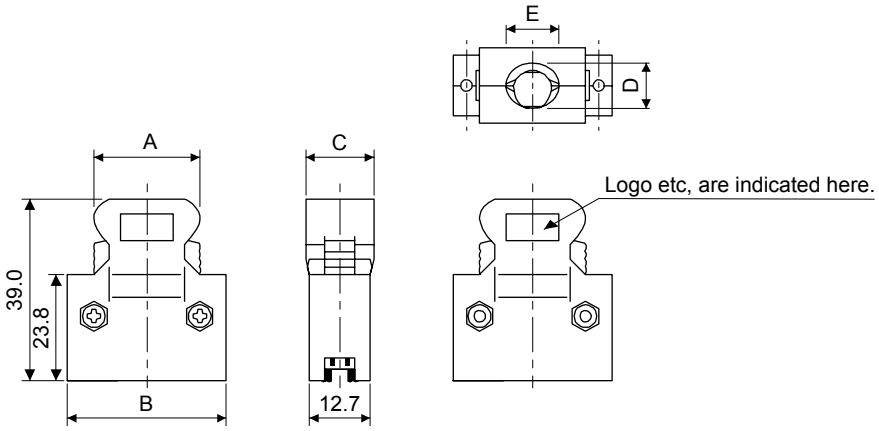

Connector	Shell kit	Each type of dimension				
		A	B	C	D	E
10120-3000PE	10320-52F0-008	22.0	33.3	14.0	10.0	12.0

(b) Jack screw M2.6 type
This is not available as option.

[Unit: mm]

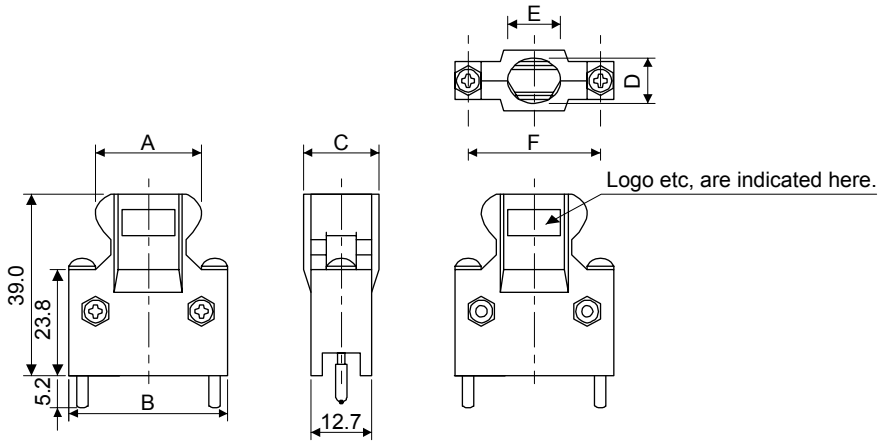

Connector	Shell kit	Each type of dimension					
		A	B	C	D	E	F
10120-3000PE	10320-52F0-008	22.0	33.3	14.0	10.0	12.0	27.4

(3) SCR connector system (3M)
Receptacle: 36210-0100PL
Shell kit: 36310-3200-008

[Unit: mm]

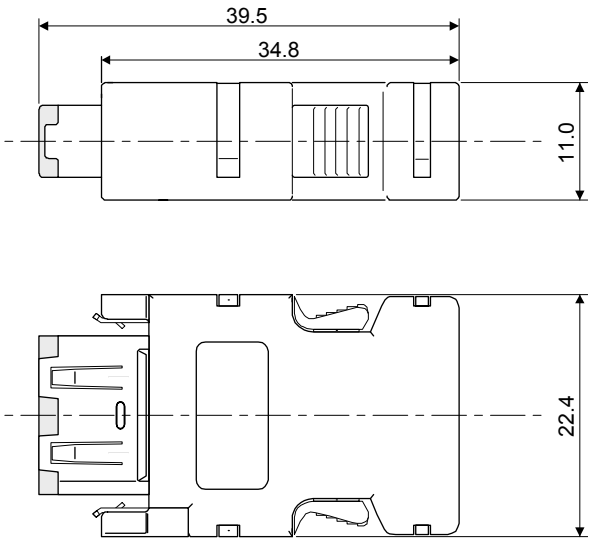

MEMO

10. CHARACTERISTICS

> POINT
>
> ●For the characteristics of the linear servo motor and the direct drive motor, refer to sections 14.4 and 15.4.

10.1 Overload protection characteristics

An electronic thermal is built in the servo amplifier to protect the servo motor, servo amplifier and servo motor power wires from overloads.
[AL. 50 Overload 1] occurs if overload operation performed is above the electronic thermal protection curve shown in fig. 10.1 [AL. 51 Overload 2] occurs if the maximum current is applied continuously for several seconds due to machine collision, etc. Use the equipment on the left-hand side area of the continuous or broken line in the graph.
When unbalanced torque is generated, such as in a vertical lift machine, it is recommended that the unbalanced torque of the machine be kept at 70% or less of the motor's rated torque.
This servo amplifier has solid-state servo motor overload protection. (The servo motor overload current (full load current) is set on the basis of 120% rated current of the servo amplifier.)

The following table shows combinations of each servo motor and graph of overload protection characteristics.

Rotary servo motor							Graph of overload protection characteristics
HG-KR	HG-MR	HG-SR	HG-UR	HG-RR	HG-JR	HG-JR (When the maximum torque is 400%)	
053 13	053 13		72				Characteristics a
23 43 73	23 43 73	51 81 52 102			53 73 103	53	Characteristics b
		121 201 152 202 301 352	152 202	103 153 203	153 203 353	73 103 153 203	Characteristics c
		421 502 702	352 502	353 503	503 703	353 503	Characteristics d
					903 11K1M 15K1M 22K1M		Characteristics e
		524 1024			534 734 1034	534	Characteristics b
		1524 2024 3524			1534 2034 3534	734 1034 1534 2034	Characteristics c
		5024 7024			5034 7034	3534 5034	Characteristics d
					9034 11K1M4 15K1M4 22K1M4		Characteristics e

The following graphs show overload protection characteristics.

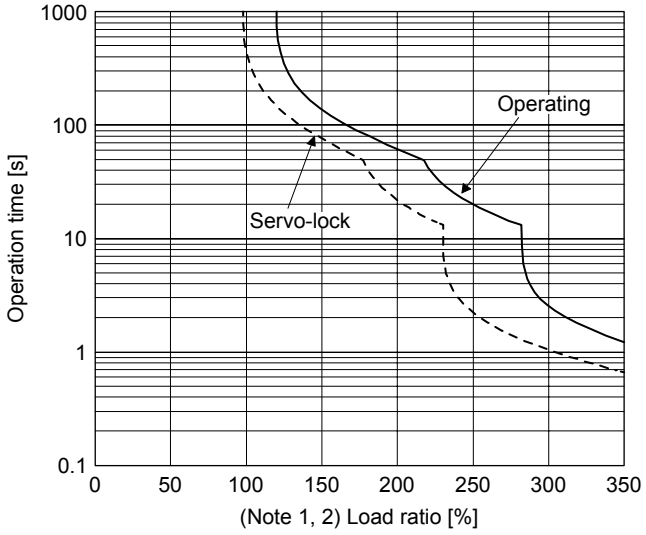

Characteristics a

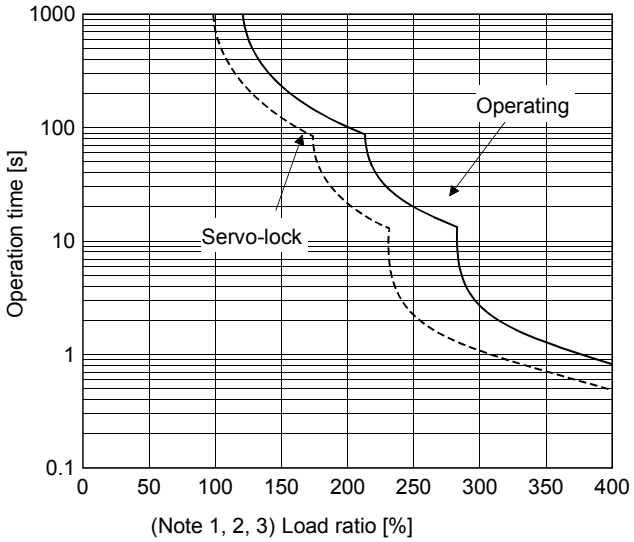

Characteristics b

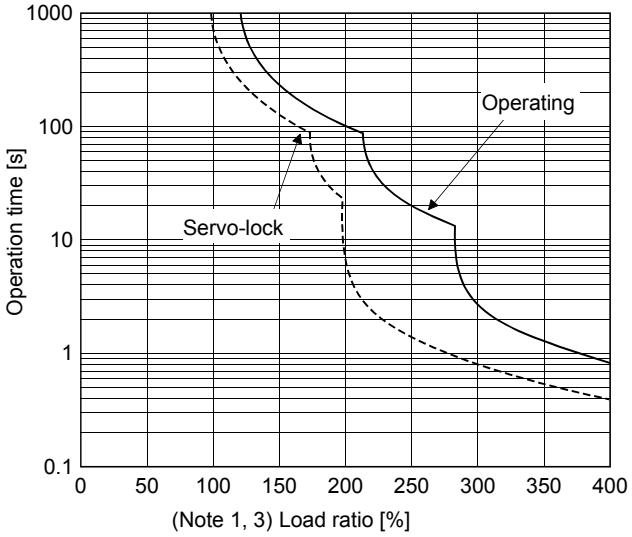

Characteristics c

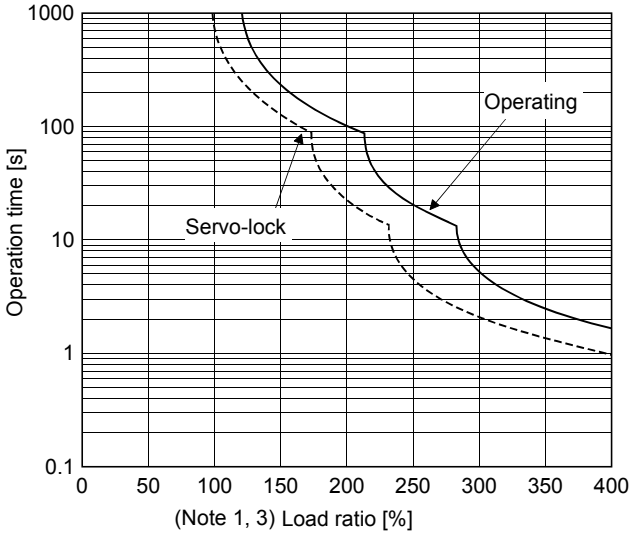

Characteristics d

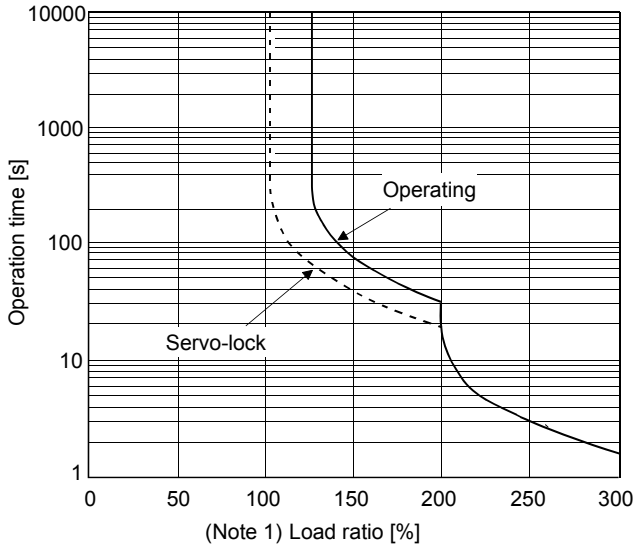

Characteristics e

Note 1. If operation that generates torque more than 100% of the rating is performed with an abnormally high frequency in a servo motor stop status (servo-lock status) or in a 30 r/min or less low-speed operation status, the servo amplifier may malfunction regardless of the electronic thermal protection.

2. The load ratio ranging from 300% to 350% applies to the HG-KR servo motor.

3. The operation time at the load ratio of 300% to 400% applies when the maximum torque of HG-JR servo motor is increased to 400% of rated torque.

Fig. 10.1 Electronic thermal protection characteristics

10.2 Power supply capacity and generated loss

(1) Amount of heat generated by the servo amplifier

Table 10.1 indicates servo amplifiers' power supply capacities and losses generated under rated load. For thermal design of an enclosed type cabinet, use the values in the table in consideration for the worst operating conditions. The actual amount of generated heat will be intermediate between values at rated torque and servo-off according to the duty used during operation. When the servo motor is run at less than the rated speed, the power supply capacity will be smaller than the value in the table, but the servo amplifier's generated heat will not change.

Table 10.1 Power supply capacity and generated loss per servo motor at rated output

Servo amplifier	Servo motor	(Note 1) Power supply capacity [kVA]	(Note 2) Servo amplifier-generated heat [W]			Area required for heat dissipation [m^2]
			At rated output	At rated output [Generated heat in the cabinet when cooled outside the cabinet] (Note 3)	With servo-off	
MR-J4-10B(-RJ)	HG-MR053	0.3	25		15	0.5
	HG-MR13	0.3	25		15	0.5
	HG-KR053	0.3	25		15	0.5
	HG-KR13	0.3	25		15	0.5
MR-J4-20B(-RJ)	HG-MR23	0.5	25		15	0.5
	HG-KR23	0.5	25		15	0.5
MR-J4-40B(-RJ)	HG-MR43	0.9	35		15	0.7
	HG-KR43	0.9	35		15	0.7
MR-J4-60B(-RJ)	HG-SR52	1.0	40		15	0.8
	HG-SR51	1.0	40		15	0.8
	HG-JR53	1.0	40		15	0.8
MR-J4-70B(-RJ)	HG-MR73	1.3	50		15	1.0
	HG-KR73	1.3	50		15	1.0
	HG-UR72	1.3	50		15	1.0
	HG-JR73	1.3	50		15	1.0
MR-J4-100B(-RJ)	HG-SR102	1.7	50		15	1.0
	HG-SR81	1.5	50		15	1.0
	HG-JR73	1.3	50		15	1.0
	HG-JR103	1.7	50		15	1.0
MR-J4-200B(-RJ)	HG-SR152	2.5	90		20	1.8
	HG-SR202	3.5	90		20	1.8
	HG-SR121	2.1	90		20	1.8
	HG-SR201	3.5	90		20	1.8
	HG-RR103	1.7	50		15	1.0
	HG-RR153	2.5	90		20	1.8
	HG-UR152	2.5	90		20	1.8
	HG-JR153	2.5	90		20	1.8
	HG-JR203	3.5	90		20	1.8
MR-J4-350B(-RJ)	HG-SR352	5.5	130		20	2.6
	HG-SR301	4.8	120		20	2.4
	HG-RR203	3.5	90		20	1.8
	HG-UR202	3.5	90		20	1.8
	HG-JR353	5.5	160		20	2.7
MR-J4-500B(-RJ)	HG-SR502	7.5	195		25	3.9
	HG-SR421	6.3	160		25	3.2
	HG-RR353	5.5	135		25	2.7
	HG-RR503	7.5	195		25	3.9
	HG-UR352	5.5	195		25	3.9
	HG-UR502	7.5	195		25	3.9
	HG-JR503	7.5	195		25	3.9
MR-J4-700B(-RJ)	HG-SR702	10	300		25	6.0
	HG-JR703	10	300		25	6.0

Servo amplifier	Servo motor	(Note 1) Power supply capacity [kVA]	(Note 2) Servo amplifier-generated heat [W]			Area required for heat dissipation [m^2]
			At rated output	At rated output [Generated heat in the cabinet when cooled outside the cabinet] (Note 3)	With servo-off	
MR-J4-11KB(-RJ)	HG-JR903	13	435	130	45	8.7
	HG-JR11K1M	16	530	160	45	11.0
MR-J4-15KB(-RJ)	HG-JR15K1M	22	640	195	45	13.0
MR-J4-22KB(-RJ)	HG-JR22K1M	33	850	260	55	17.0
MR-J4-60B4(-RJ)	HG-SR524	1.0	40		18	0.8
	HG-JR534	1.0	40		18	0.8
MR-J4-100B4(-RJ)	HG-SR1024	1.7	60		18	1.2
	HG-JR734	1.3	60		18	1.2
	HG-JR1034	1.7	60		18	1.2
MR-J4-200B4(-RJ)	HG-SR1524	2.5	90		20	1.8
	HG-SR2024	3.5	90		20	1.8
	HG-JR1534	2.5	90		20	1.8
	HG-JR2034	3.5	90		20	1.8
MR-J4-350B4(-RJ)	HG-SR3524	5.5	130		20	2.6
	HG-JR3534	5.5	160		20	2.7
MR-J4-500B4(-RJ)	HG-SR5024	7.5	195		25	3.9
	HG-JR5034	7.5	195		25	3.9
MR-J4-700B4(-RJ)	HG-SR7024	10	300		25	6.0
	HG-JR7034	10	300		25	6.0
MR-J4-11KB4(-RJ)	HG-JR9034	13	435	130	45	8.7
	HG-JR11K1M4	16	530	160	45	11.0
MR-J4-15KB4(-RJ)	HG-JR15K1M4	22	640	195	45	13.0
MR-J4-22KB4(-RJ)	HG-JR22K1M4	33	850	260	55	17.0
MR-J4-10B1(-RJ)	HG-MR053	0.3	25		15	0.5
	HG-MR13	0.3	25		15	0.5
	HG-KR053	0.3	25		15	0.5
	HG-KR13	0.3	25		15	0.5
MR-J4-20B1(-RJ)	HG-MR23	0.5	25		15	0.5
	HG-KR23	0.5	25		15	0.5
MR-J4-40B1(-RJ)	HG-MR43	0.9	35		15	0.7
	HG-KR43	0.9	35		15	0.7

Note 1. Note that the power supply capacity will vary according to the power supply impedance. This value is applicable when the power factor improving AC reactor or power factor improving DC reactor are not used.

2. Heat generated during regeneration is not included in the servo amplifier-generated heat. To calculate heat generated by the regenerative option, refer to section 11.2.

3. This value is applicable when the servo amplifier is cooled by using the heat sink outside mounting attachment.

(2) Heat dissipation area for an enclosed type cabinet

The enclosed type cabinet (hereafter called the cabinet) which will contain the servo amplifier should be designed to ensure that its temperature rise is within +10 °C at the ambient temperature of 40 °C. (With an approximately 5 °C safety margin, the system should operate within a maximum 55 °C limit.) The necessary cabinet heat dissipation area can be calculated by equation 10.1.

$$A = \frac{P}{K \cdot \Delta T} \quad \cdots\cdots (10.1)$$

A: Heat dissipation area [m^2]
P: Loss generated in the cabinet [W]
ΔT: Difference between internal and ambient temperatures [°C]
K: Heat dissipation coefficient [5 to 6]

When calculating the heat dissipation area with equation 10.1, assume that P is the sum of all losses generated in the cabinet. Refer to table 10.1 for heat generated by the servo amplifier. "A" indicates the effective area for heat dissipation, but if the cabinet is directly installed on an insulated wall, that extra amount must be added to the cabinet's surface area. The required heat dissipation area will vary with the conditions in the cabinet. If convection in the cabinet is poor and heat builds up, effective heat dissipation will not be possible. Therefore, arrangement of the equipment in the cabinet and the use of a cooling fan should be considered. Table 10.1 lists the cabinet dissipation area for each servo amplifier (guideline) when the servo amplifier is operated at the ambient temperature of 40 °C under rated load.

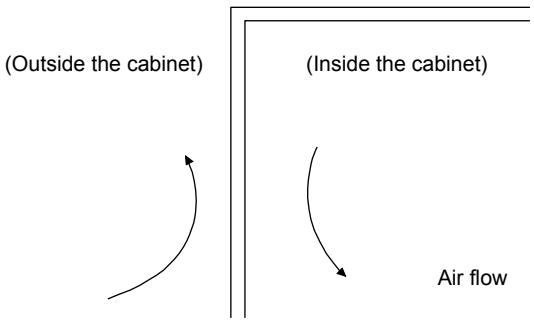

Fig. 10.2 Temperature distribution in an enclosed type cabinet

When air flows along the outer wall of the cabinet, effective heat exchange will be possible, because the temperature slope inside and outside the cabinet will be steeper.

10.3 Dynamic brake characteristics

POINT

- Do not use dynamic brake to stop in a normal operation as it is the function to stop in emergency.
- For a machine operating at the recommended load to motor inertia ratio or less, the estimated number of usage times of the dynamic brake is 1000 times while the machine decelerates from the rated speed to a stop once in 10 minutes.
- Be sure to enable EM1 (Forced stop 1) after servo motor stops when using EM1 (Forced stop 1) frequently in other than emergency.
- Servo motors for MR-J4 may have the different coasting distance from that of the previous model.
- The electronic dynamic brake operates in the initial state for the HG series servo motors of 600 W or smaller capacity. The time constant "τ" for the electronic dynamic brake will be shorter than that of normal dynamic brake. Therefore, coasting distance will be longer than that of normal dynamic brake. For how to set the electronic dynamic brake, refer to [Pr. PF06] and [Pr. PF12].

10.3.1 Dynamic brake operation

(1) Calculation of coasting distance

Fig. 10.3 shows the pattern in which the servo motor comes to a stop when the dynamic brake is operated. Use equation 10.2 to calculate an approximate coasting distance to a stop. The dynamic brake time constant τ varies with the servo motor and machine operation speeds. (Refer to (2)(a), (b) of this section.)

A working part generally has a friction force. Therefore, actual coasting distance will be shorter than a maximum coasting distance calculated with the following equation.

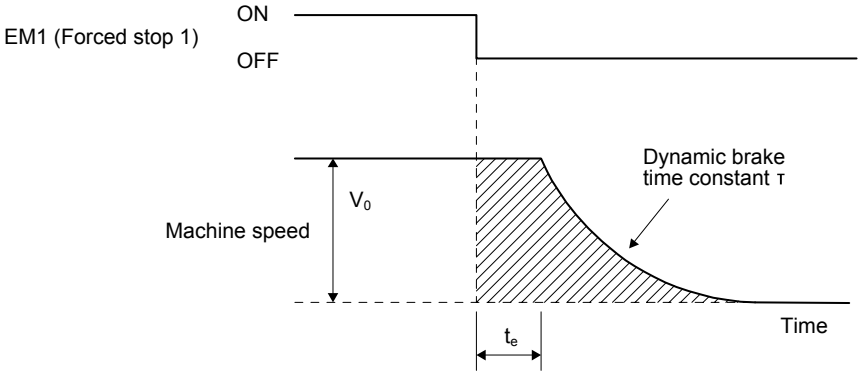

Fig. 10.3 Dynamic brake operation diagram

$$L_{max} = \frac{V_0}{60} \cdot \left\{ t_e + \tau \left(1 + \frac{J_L}{J_M} \right) \right\} \quad \cdots\cdots (10.2)$$

L_{max}: Maximum coasting distance ····· [mm]
V_0: Machine's fast feed speed ····· [mm/min]
J_M: Moment of inertia of the servo motor ····· [× 10^{-4} kg•m^2]
J_L: Load moment of inertia converted into equivalent value on servo motor shaft ····· [× 10^{-4} kg•m^2]
τ: Dynamic brake time constant ····· [s]
t_e: Delay time of control section ····· [s]
For 7 kW or lower servo, there is internal relay delay time of about 10 ms. For 11 kW to 22 kW servo, there is delay caused by magnetic contactor built into the external dynamic brake (about 50 ms) and delay caused by the external relay.

(2) Dynamic brake time constant

The following shows necessary dynamic brake time constant τ for equation 10.2.

(a) 200 V class

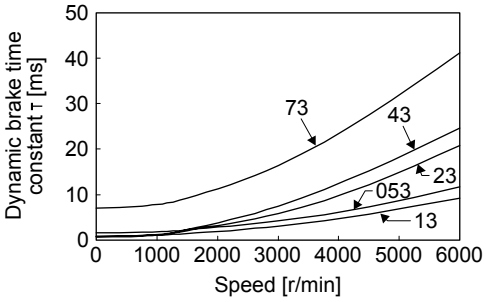

HG-MR series

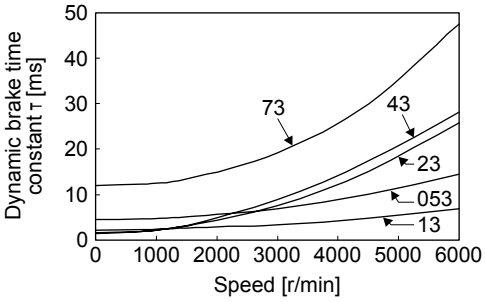

HG-KR series

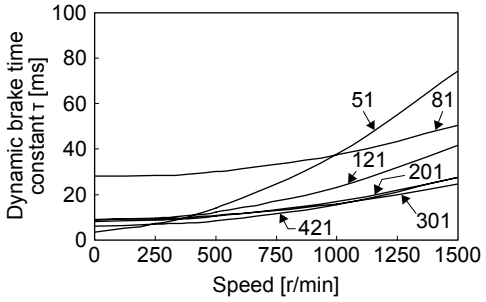

HG-SR 1000 r/min series

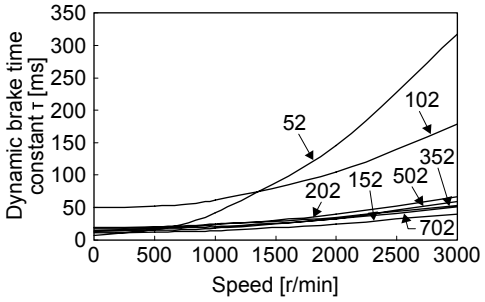

HG-SR 2000 r/min series

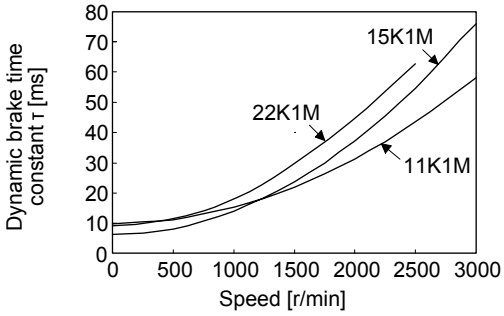

HG-JR1500 r/min series

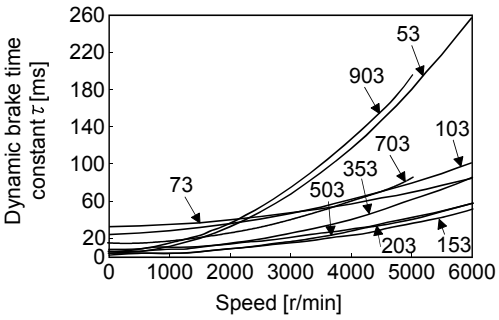

HG-JR3000 r/min series

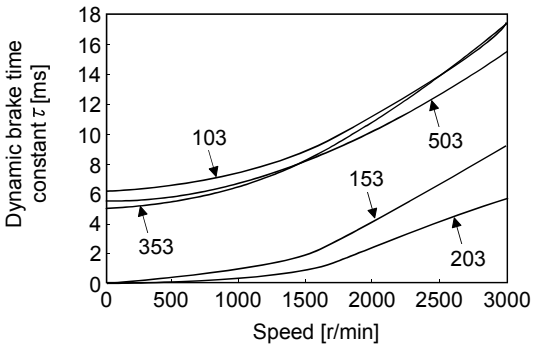

HG-RR series

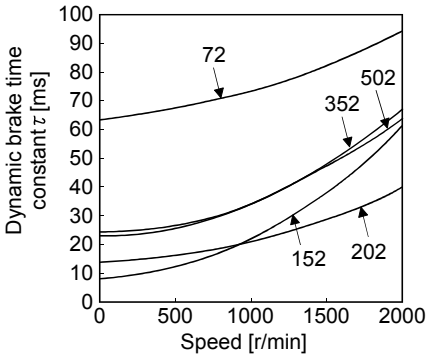

HG-UR series

(b) 400 V class

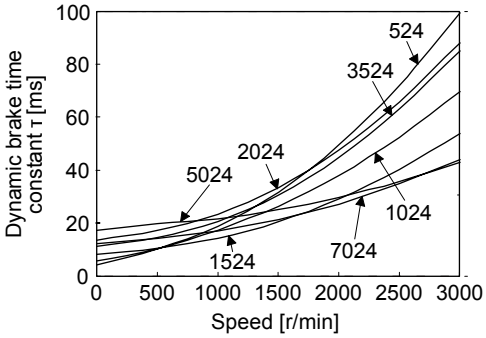

HG-SR series

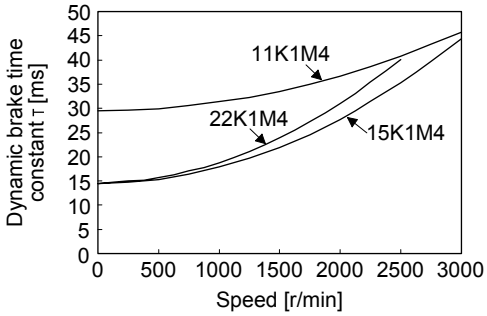

HG-JR1500r/min series

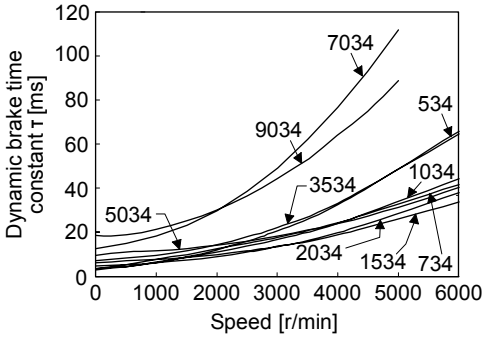

HG-SR3000r/min series

10.3.2 Permissible load to motor inertia when the dynamic brake is used

Use the dynamic brake under the load to motor inertia ratio indicated in the following table. If the load inertia moment is higher than this value, the dynamic brake may burn. If the load to motor inertia ratio exceeds the indicated value, contact your local sales office.
The values of the permissible load to motor inertia ratio in the table are the values at the maximum rotation speed of the servo motor. The value in the parenthesis shows the value at the rated speed.

Servo motor	Permissible load to motor inertia ratio [multiplier]
HG-KR053	30
HG-KR13	
HG-KR23	
HG-KR43	
HG-KR73	
HG-MR053	35
HG-MR13	32
HG-MR23	
HG-MR43	
HG-MR73	
HG-SR51	30
HG-SR81	
HG-SR121	
HG-SR201	
HG-SR301	16
HG-SR421	15
HG-SR52	30
HG-SR102	
HG-SR152	21
HG-SR202	
HG-SR352	13 (15)
HG-SR502	
HG-SR702	5 (15)
HG-SR524	5 (15)
HG-SR1024	5 (17)
HG-SR1524	
HG-SR2024	5 (15)
HG-SR3524	
HG-SR5024	
HG-SR7024	
HG-UR72	30
HG-UR152	

Servo motor	Permissible load to motor inertia ratio [multiplier]
HG-UR202	16
HG-UR352	
HG-UR502	15
HG-RR103	30
HG-RR153	
HG-RR203	16
HG-RR353	15
HG-RR503	
HG-JR53	30
HG-JR73	
HG-JR103	
HG-JR203	
HG-JR353	16 (30)
HG-JR503	15 (30)
HG-JR703	11 (30)
HG-JR903	18 (30)
HG-JR11K1M	10 (30)
HG-JR15K1M	
HG-JR22K1M	20 (30)
HG-JR534	30 (30)
HG-JR734	
HG-JR1034	
HG-JR1534	
HG-JR2034	
HG-JR3534	20 (30) (Note)
HG-JR5034	15 (30)
HG-JR7034	11 (30)
HG-JR9034	18 (30)
HG-JR11K1M4	10 (30)
HG-JR15K1M4	
HG-JR22K1M4	20 (30)

Note. When the maximum torque is increased to 400%, the permissible load to motor inertia ratio at the maximum speed of the servo motor is 25 times.

10.4 Cable bending life

The bending life of the cables is shown below. This graph calculated values. Since they are not guaranteed values, provide a little allowance for these values.

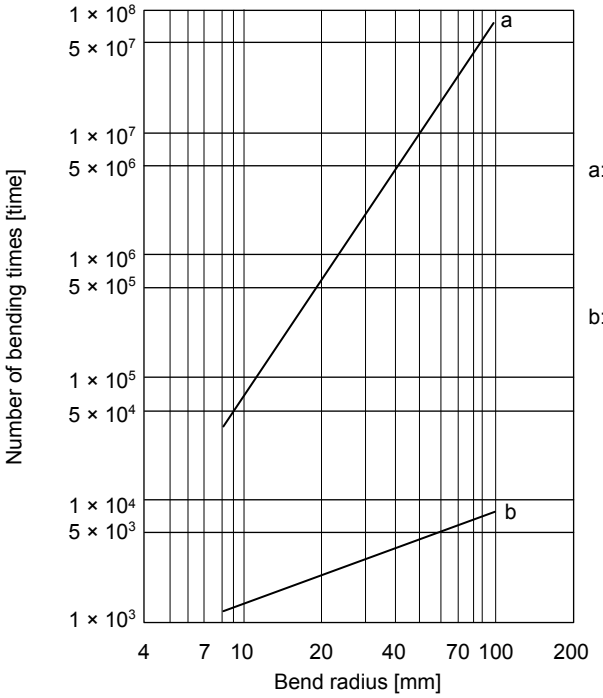

a: Long bending life encoder cable
Long bending life motor power cable
Long bending life electromagnetic brake cable
SSCNET III cable using long distance cable

b: Standard encoder cable
Standard motor power cable
Standard electromagnetic brake cable
SSCNET III cable using inside panel standard cord
SSCNET III cable using outside panel standard cable

10.5 Inrush currents at power-on of main circuit and control circuit

POINT
●The inrush current values can change depending on frequency of turning on/off the power and ambient temperature.

Since large inrush currents flow in the power supplies, always use molded-case circuit breakers and magnetic contactors. (Refer to section 11.10.)
When circuit protectors are used, it is recommended that the inertia delay type, which is not tripped by an inrush current, be used.

(1) 200 V class
The following shows the inrush currents (reference data) that will flow when 240 V AC servo amplifier) is applied at the power supply capacity of 2500 kVA and the wiring length of 1 m. Even when you use a 1-phase 200 V AC power supply with MR-J4-10B(-RJ) to MR-J4-70B(-RJ), the inrush currents of the main circuit power supply is the same.

Servo amplifier	Inrush currents (A_{0-P})	
	Main circuit power supply (L1, L2, and L3)	Control circuit power supply (L11 and L21)
MR-J4-10B(-RJ) MR-J4-20B(-RJ) MR-J4-40B(-RJ) MR-J4-60B(-RJ)	30 A (attenuated to approx. 3 A in 20 ms)	20 A to 30 A (attenuated to approx. 1 A in 20 ms)
MR-J4-70B(-RJ) MR-J4-100B(-RJ)	34 A (attenuated to approx. 7 A in 20 ms)	
MR-J4-200B(-RJ) MR-J4-350B(-RJ)	113 A (attenuated to approx. 12 A in 20 ms)	
MR-J4-500B(-RJ)	42 A (attenuated to approx. 20 A in 20 ms)	34 A (attenuated to approx. 2 A in 20 ms)
MR-J4-700B(-RJ)	85 A (attenuated to approx. 20 A in 30 ms)	
MR-J4-11KB(-RJ)	226 A (attenuated to approx. 30 A in 30 ms)	42 A (attenuated to approx. 2 A in 30 ms)
MR-J4-15KB(-RJ)	226 A (attenuated to approx. 50 A in 30 ms)	
MR-J4-22KB(-RJ)	226 A (attenuated to approx. 70 A in 30 ms)	

(2) 400 V class
The following shows the inrush currents (reference data) that will flow when 480 V AC is applied at the power supply capacity of 2500 kVA and the wiring length of 1 m.

Servo amplifier	Inrush currents (A_{0-P})	
	Main circuit power supply (L1, L2 and L3)	Control circuit power supply (L11 and L21)
MR-J4-60B4(-RJ) MR-J4-100B4(-RJ)	65 A (attenuated to approx. 5 A in 10 ms)	40 A to 50 A (attenuated to approx. 0 A in 2 ms)
MR-J4-200B4(-RJ)	80 A (attenuated to approx. 5 A in 10 ms)	
MR-J4-350B4(-RJ)	100 A (attenuated to approx. 20 A in 10 ms)	
MR-J4-500B4(-RJ)	65 A (attenuated to approx. 9 A in 20 ms)	41 A (attenuated to approx. 0 A in 3 ms)
MR-J4-700B4(-RJ)	68 A (attenuated to approx. 34 A in 20 ms)	
MR-J4-11KB4(-RJ)	339 A (attenuated to approx. 10 A in 30 ms)	38 A (attenuated to approx. 1 A in 30 ms)
MR-J4-15KB4(-RJ)	339 A (attenuated to approx. 15 A in 30 ms)	
MR-J4-22KB4(-RJ)	339 A (attenuated to approx. 20 A in 30 ms)	

(3) 100 V class

The following shows the inrush currents (reference data) that will flow when 120 V AC is applied at the power supply capacity of 2500 kVA and the wiring length of 1 m.

Servo amplifier	Inrush currents (A_{0-P})	
	Main circuit power supply (L1 and L2)	Control circuit power supply (L11 and L21)
MR-J4-10B1(-RJ) MR-J4-20B1(-RJ) MR-J4-40B1(-RJ)	38 A (attenuated to approx. 14 A in 10 ms)	20 A to 30 A (attenuated to approx. 0 A in 1 ms to 2 ms)

MEMO

11. OPTIONS AND PERIPHERAL EQUIPMENT

⚠WARNING	●Before connecting any option or peripheral equipment, turn off the power and wait for 15 minutes or more until the charge lamp turns off. Then, confirm that the voltage between P+ and N- is safe with a voltage tester and others. Otherwise, an electric shock may occur. In addition, when confirming whether the charge lamp is off or not, always confirm it from the front of the servo amplifier.

⚠CAUTION	●Use the specified peripheral equipment and options to prevent a malfunction or a fire.

POINT

●We recommend using HIV wires to wire the servo amplifiers, options, and peripheral equipment. Therefore, the recommended wire sizes may differ from those used for the previous servo amplifiers.

11.1 Cable/connector sets

POINT

●The IP rating indicated for cables and connectors is their protection against ingress of dust and raindrops when they are connected to a servo amplifier or servo motor. If the IP rating of the cable, connector, servo amplifier and servo motor vary, the overall IP rating depends on the lowest IP rating of all components.

Please purchase the cable and connector options indicated in this section.

11.1.1 Combinations of cable/connector sets

For MR-J4-_B_ servo amplifier

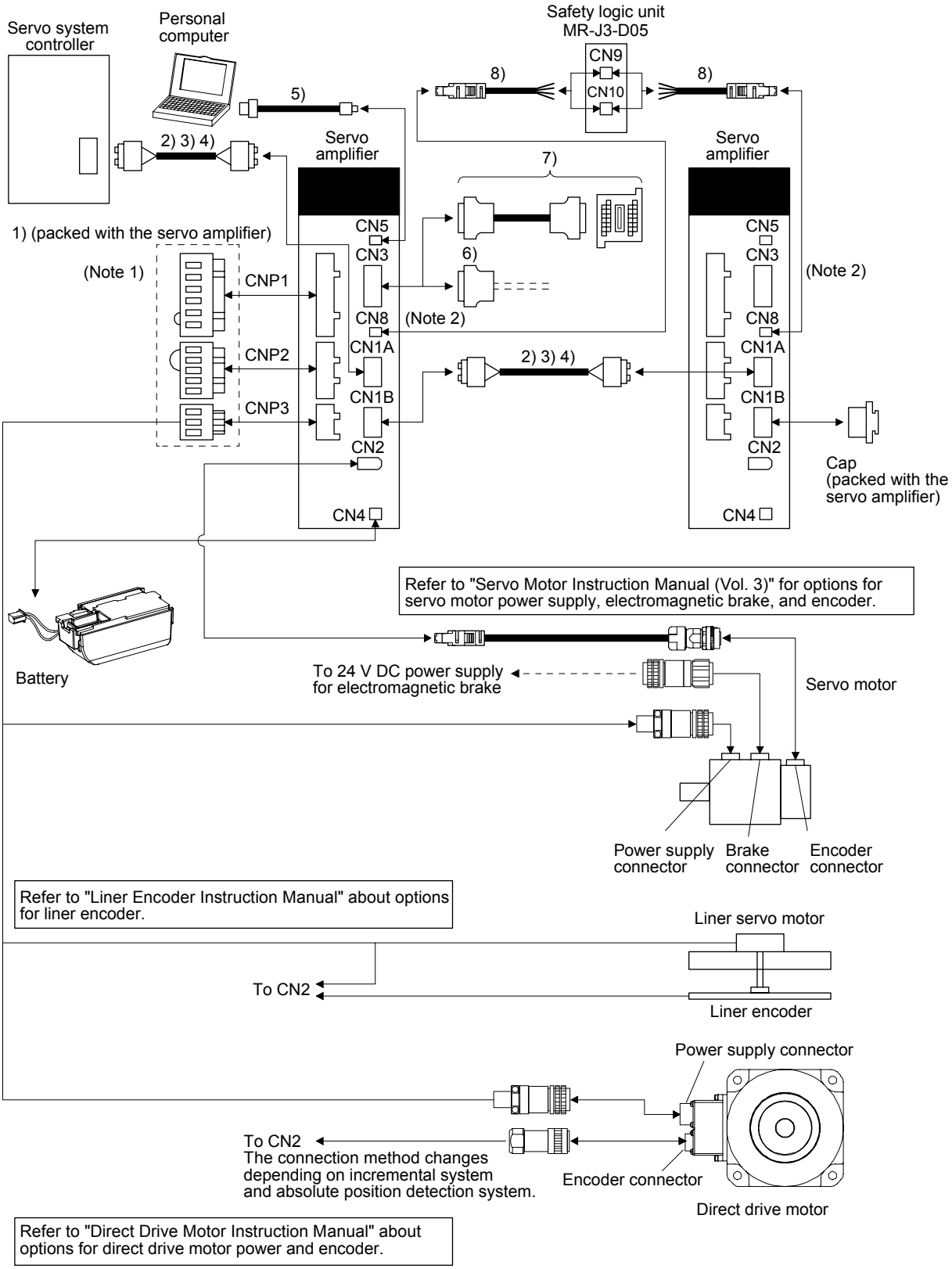

Note 1. Connectors for 3.5 kW or less. For 5 kW or more, it is a terminal block.

2. When not using the STO function, attach the short-circuit connector (9)) came with a servo amplifier.

For MR-J4-_B_-RJ servo amplifier

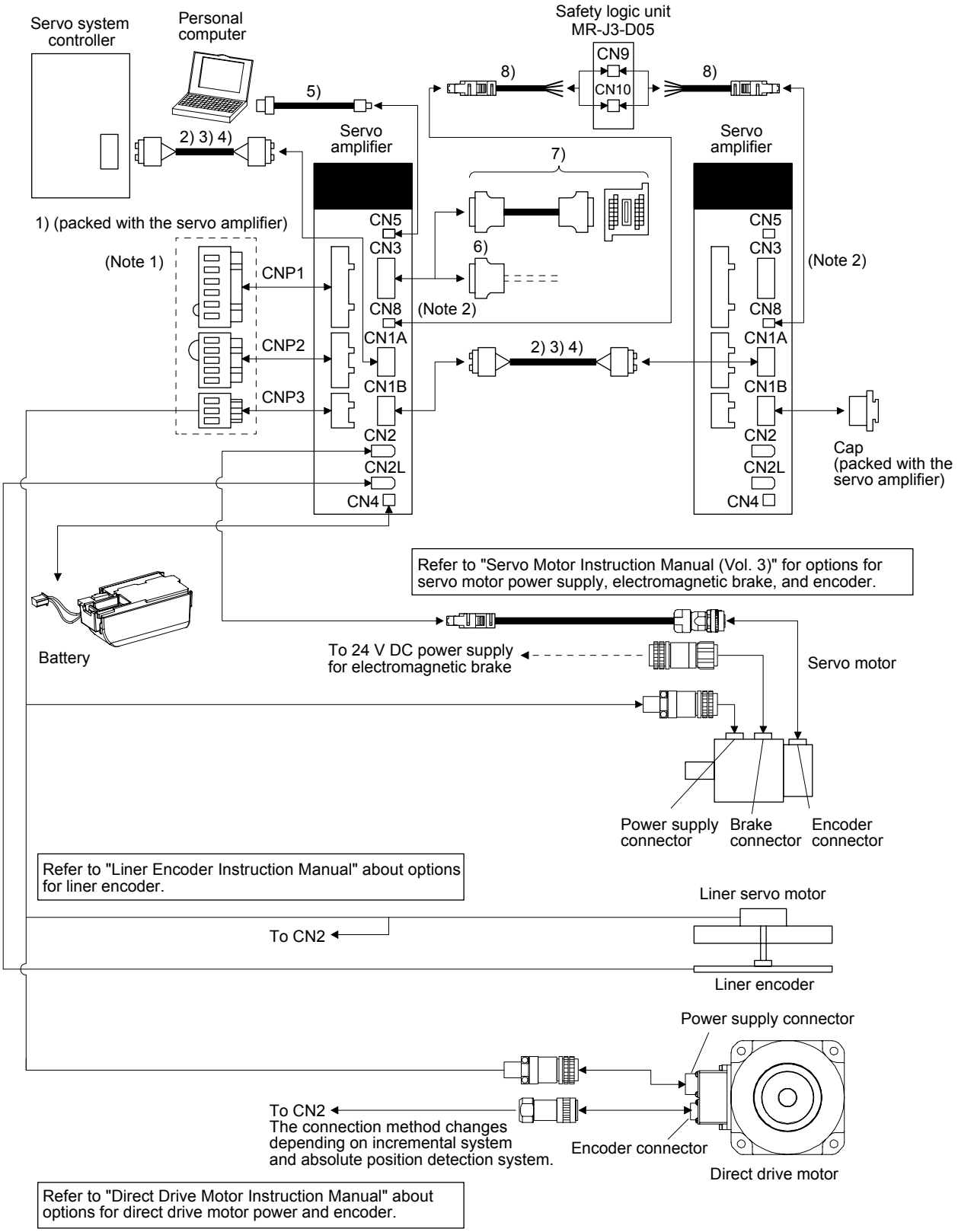

Note 1. Connectors for 3.5 kW or less. For 5 kW or more, it is a terminal block.

2. When not using the STO function, attach the short-circuit connector (9)) came with a servo amplifier.

No.	Product name	Model	Description	Application
1)	Servo amplifier power connector set		CNP1 Connector: 06JFAT-SAXGDK-H7.5 (JST) CNP2 Connector: 05JFAT-SAXGDK-H5.0 (JST) CNP3 Connector: 03JFAT-SAXGDK-H7.5 (JST) Applicable wire size: 0.8 mm^2 to 2.1 mm^2 (AWG 18 to 14) Insulator OD: to 3.9 mm Open tool J-FAT-OT (JST)	Supplied with 200 V class and 100 V class servo amplifiers of 1 kW or less
			CNP1 Connector: 06JFAT-SAXGFK-XL (JST) (CNP1 and CNP3) Applicable wire size: 1.25 mm^2 to 5.5 mm^2 (AWG 16 to 10) Insulator OD: to 4.7 mm CNP2 Connector: 05JFAT-SAXGDK-H5.0 (JST) (CNP2) Applicable wire size: 0.8 mm^2 to 2.1 mm^2 (AWG 18 to 14) Insulator OD: to 3.9 mm CNP3 Connector: 03JFAT-SAXGFK-XL (JST) Open tool Quantity: 1 Model: J-FAT-OT-EXL (JST)	Supplied with 200 V class servo amplifiers of 2 kW and 3.5 kW
			CNP1 connector: 06JFAT-SAXGDK-HT10.5 (JST) CNP2 connector: 05JFAT-SAXGDK-HT7.5 (JST) CNP3 connector: 03JFAT-SAXGDK-HT10.5 (JST) Applicable wire size: 1.25 mm^2 to 2.1 mm^2 (AWG 16 to 14) Insulator OD: to 3.9 mm Open tool J-FAT-OT-XL (JST)	Supplied with 400 V class servo amplifiers of 3.5 kW or less
2)	SSCNET III cable	MR-J3BUS_M Cable length: 0.15 m to 3 m (Refer to section 11.1.3.)	Connector: PF-2D103 (JAE) Connector: PF-2D103 (JAE)	Standard cord inside cabinet
3)	SSCNET III cable	MR-J3BUS_M-A Cable length: 5 m to 20 m (Refer to section 11.1.3.)		Standard cable outside cabinet
4)	SSCNET III cable	MR-J3BUS_M-B Cable length: 30 m to 50 m (Refer to section 11.1.3.)	Connector: CF-2D103-S (JAE) Connector: CF-2D103-S (JAE)	Long-distance cable
5)	USB cable	MR-J3USBCBL3M Cable length: 3 m	CN5 connector mini-B connector (5 pins) Personal computer connector A connector	For connection with PC-AT compatible personal computer

No.	Product name	Model	Description	Application
6)	Connector set	MR-CCN1	Connector: 10120-3000PE Shell kit: 10320-52F0-008 (3M or equivalent)	
7)	Junction terminal block (recommended)		PS7DW-20V14B-F (Yoshida Electric Industry) MR-J2HBUS_M Junction terminal block PS7DW-20V14B-F is not option. For using the junction terminal block, option MR-J2HBUS_M is necessary. Refer to section 11.6 for details.	
8)	STO cable	MR-D05UDL3M-B	Connector set: 2069250-1 (TE Connectivity)	Connection cable for the CN8 connector
9)	Short-circuit connector			Supplied with servo amplifier

11.1.2 MR-D05UDL3M-B STO cable

This cable is for connecting an external device to the CN8 connector.

Cable model	Cable length	Application
MR-D05UDL3M-B	3 m	Connection cable for the CN8 connector

(1) Configuration diagram

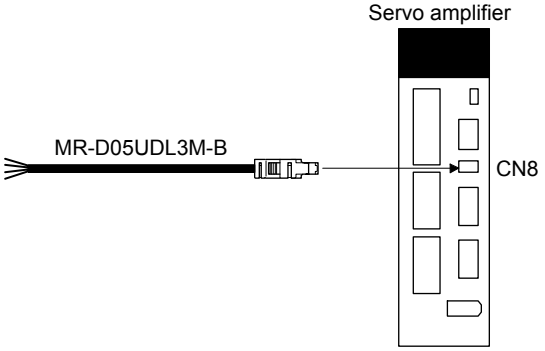

(2) Internal wiring diagram

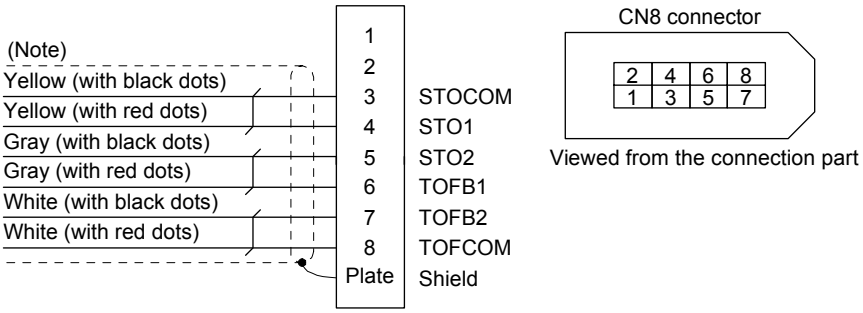

Note. Do not use the two core wires with orange insulator (with red or black dots).

11.1.3 SSCNET III cable

POINT

- Do not look directly at the light generated from CN1A/CN1B connector of servo amplifier or the end of SSCNET III cable. The light can be a discomfort when it enters the eye.
- Refer to appendix 10 for long distance cable over 50 m and ultra-long bending life cable.

(1) Model explanations

The numbers in the cable length field of the table indicate the symbol filling the underline "_" in the cable model. The cables of the lengths with the symbols are available.

Cable model	Cable length											Bending life	Application/remark
	0.15 m	0.3 m	0.5 m	1 m	3 m	5 m	10 m	20 m	30 m	40 m	50 m		
MR-J3BUS_M	015	03	05	1	3							Standard	Using standard cord inside cabinet
MR-J3BUS_M-A						5	10	20				Standard	Using standard cable outside cabinet
(Note) MR-J3BUS_M-B									30	40	50	Long bending life	Using long distance cable

Note. For cable of 30 m or shorter, contact your local sales office.

(2) Specifications

		Description			
SSCNET III cable model		MR-J3BUS_M		MR-J3BUS_M-A	MR-J3BUS_M-B
SSCNET III cable length		0.15 m	0.3 m to 3 m	5 m to 20 m	30 m to 50 m
Optical cable (cord)	Minimum bend radius	25 mm		Enforced covering cable: 50 mm Cord: 25 mm	Enforced covering cable: 50 mm Cord: 30 mm
	Tension strength	70 N	140 N	420 N (Enforced covering cable)	980 N (Enforced covering cable)
	Temperature range for use (Note)	-40 °C to 85 °C			-20 °C to 70 °C
	Ambience	Indoors (no direct sunlight), no solvent or oil			
	Appearance [mm]	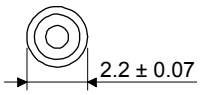	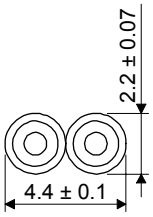	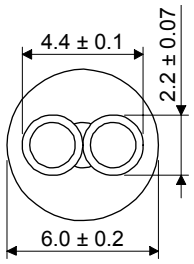	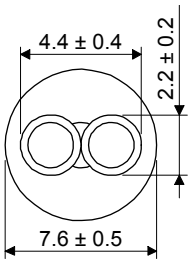

Note. This temperature range for use is the value for optical cable (cord) only. Temperature condition for the connector is the same as that for servo amplifier.

(3) Dimensions

(a) MR-J3BUS015M

[Unit: mm]

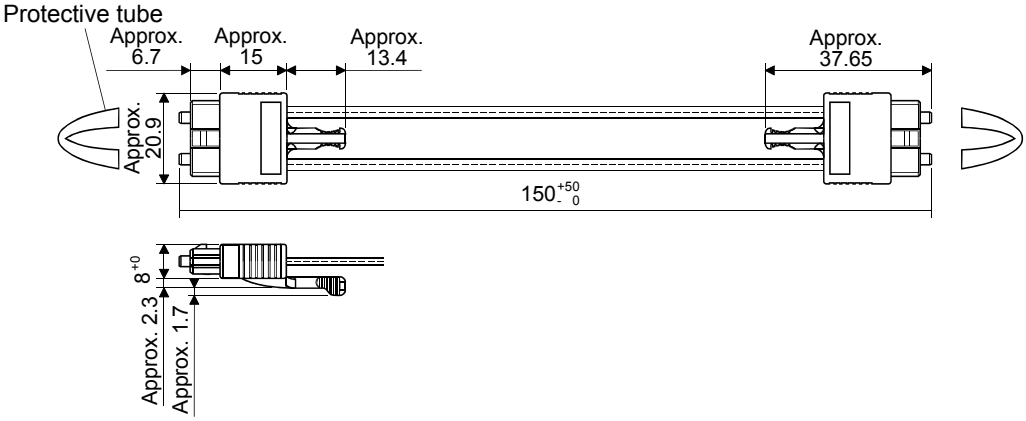

(b) MR-J3BUS03M to MR-J3BUS3M

Refer to the table shown in (1) of this section for cable length (L).

[Unit: mm]

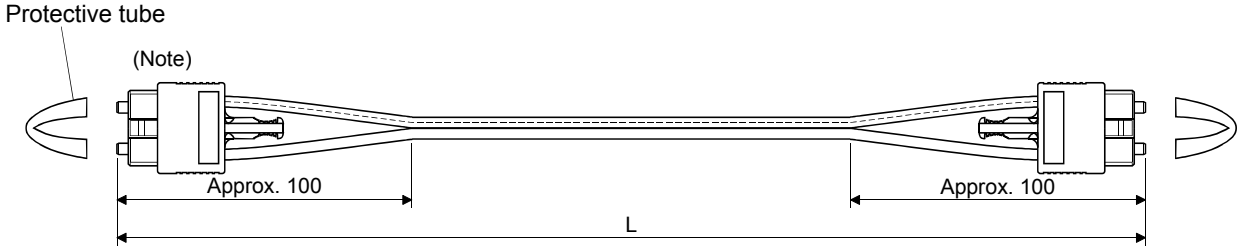

Note. Dimension of connector part is the same as that of MR-J3BUS015M.

(c) MR-J3BUS5M-A to MR-J3BUS20M-A/MR-J3BUS30M-B to MR-J3BUS50M-B

Refer to the table shown in (1) of this section for cable length (L).

SSCNET III cable	Variable dimensions [mm]	
	A	B
MR-J3BUS5M-A to MR-J3BUS20M-A	100	30
MR-J3BUS30M-B to MR-J3BUS50M-B	150	50

[Unit: mm]

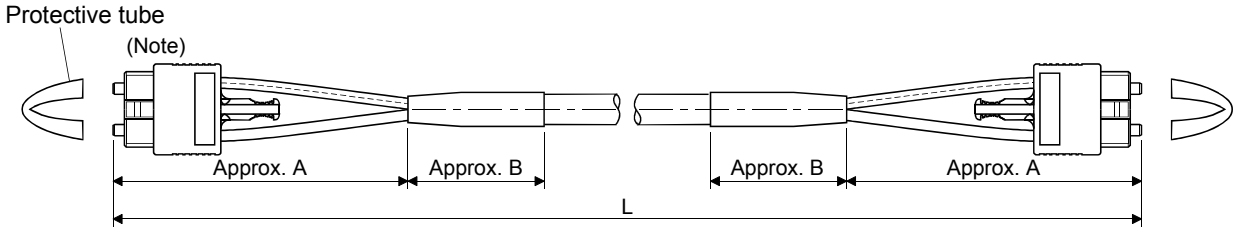

Note. Dimension of connector part is the same as that of MR-J3BUS015M.

11.2 Regenerative options

⚠CAUTION	●Do not use servo amplifiers with regenerative options other than the combinations specified below. Otherwise, it may cause a fire.

11.2.1 Combination and regenerative power

The power values in the table are resistor-generated powers and not rated powers.

(1) 200 V class

Servo amplifier	Regenerative power [W]									
	Built-in regenerative resistor	MR-RB032 [40 Ω]	MR-RB12 [40 Ω]	MR-RB30 [13 Ω]	MR-RB3N [9 Ω]	MR-RB31 [6.7 Ω]	MR-RB32 [40 Ω]	(Note 1) MR-RB50 [13 Ω]	(Note 1) MR-RB5N [9 Ω]	(Note 1) MR-RB51 [6.7 Ω]
MR-J4-10B (-RJ)		30								
MR-J4-20B (-RJ)	10	30	100							
MR-J4-40B (-RJ)	10	30	100							
MR-J4-60B (-RJ)	10	30	100							
MR-J4-70B (-RJ)	20	30	100				300			
MR-J4-100B (-RJ)	20	30	100				300			
MR-J4-200B (-RJ)	100			300				500		
MR-J4-350B (-RJ)	100				300				500	
MR-J4-500B (-RJ)	130					300				500
MR-J4-700B (-RJ)	170					300				500

Servo amplifier	(Note 2) Regenerative power [W]			
	External regenerative resistor (accessory)	MR-RB5R [3.2 Ω]	MR-RB9F [3 Ω]	MR-RB9T [2.5 Ω]
MR-J4-11KB (-RJ)	500 (800)	500 (800)		
MR-J4-15KB (-RJ)	850 (1300)		850 (1300)	
MR-J4-22KB (-RJ)	850 (1300)			850 (1300)

Note 1. Always install a cooling fan.
2. Values in parentheses assume the installation of a cooling fan.

(2) 400 V class

Servo amplifier	Regenerative power [W]								
	Built-in regenerative resistor	MR-RB1H-4 [82 Ω]	(Note 1) MR-RB3M-4 [120 Ω]	(Note 1) MR-RB3G-4 [47 Ω]	(Note 1) MR-RB5G-4 [47 Ω]	(Note 1) MR-RB34-4 [26 Ω]	(Note 1) MR-RB54-4 [26 Ω]	(Note 1) MR-RB3U-4 [22 Ω]	(Note 1) MR-RB5U-4 [22 Ω]
MR-J4-60B4(-RJ)	15	100	300						
MR-J4-100B4(-RJ)	15	100	300						
MR-J4-200B4(-RJ)	100			300	500				
MR-J4-350B4(-RJ)	100			300	500				
MR-J4-500B4(-RJ)	130					300	500		
MR-J4-700B4(-RJ)	170							300	500

Servo amplifier	(Note 2) Regenerative power [W]		
	External regenerative resistor (accessory)	MR-RB5K-4 [10 Ω]	MR-RB6K-4 [10 Ω]
MR-J4-11KB4(-RJ)	500 (800)	500 (800)	
MR-J4-15KB4(-RJ)	850 (1300)		850 (1300)
MR-J4-22KB4(-RJ)	850 (1300)		850 (1300)

Note 1. Always install a cooling fan.
2. Values in parentheses assume the installation of a cooling fan.

(3) 100 V class

Servo amplifier	Regenerative power [W]		
	Built-in regenerative resistor	MR-RB032 [40 Ω]	MR-RB12 [40 Ω]
MR-J4-10B1(-RJ)		30	
MR-J4-20B1(-RJ)	10	30	100
MR-J4-40B1(-RJ)	10	30	100

11.2.2 Selection of regenerative option

(1) Rotary servo motor and direct drive motor
Use the following method when regeneration occurs continuously in vertical motion applications or when it is desired to make an in-depth selection of the regenerative option.

(a) Regenerative energy calculation

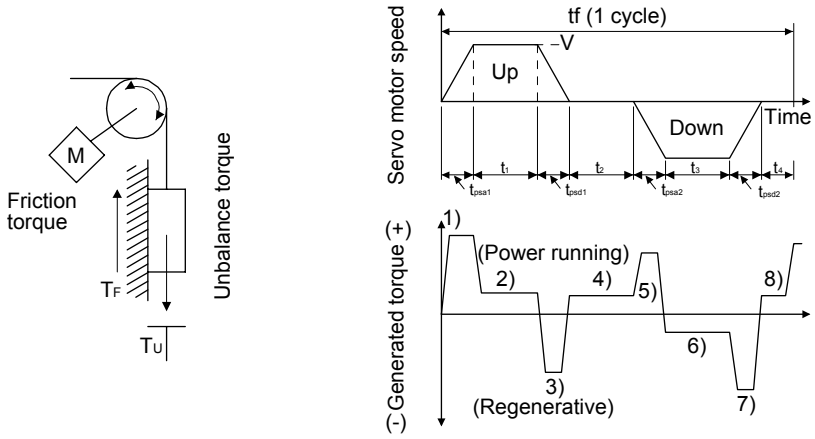

Formulas for calculating torque and energy in operation

Regenerative power	Torque applied to servo motor [N•m]	Energy E [J]
1)	$T_1 = \frac{(J_L/\eta + J_M) \cdot V}{9.55 \cdot 10^4} \cdot \frac{1}{t_{psa1}} + T_U + T_F$	$E_1 = \frac{0.1047}{2} \cdot V \cdot T_1 \cdot t_{psa1}$
2)	$T_2 = T_U + T_F$	$E_2 = 0.1047 \cdot V \cdot T_2 \cdot t_1$
3)	$T_3 = \frac{-(J_L \cdot \eta + J_M) \cdot V}{9.55 \cdot 10^4} \cdot \frac{1}{t_{psa2}} + T_U + T_F$	$E_3 = \frac{0.1047}{2} \cdot V \cdot T_3 \cdot t_{psa2}$
4), 8)	$T_4, T_8 = T_U$	$E_4, E_8 \geq 0$ (No regeneration)
5)	$T_5 = \frac{(J_L/\eta + J_M) \cdot V}{9.55 \cdot 10^4} \cdot \frac{1}{t_{psd2}} - T_U + T_F$	$E_5 = \frac{0.1047}{2} \cdot V \cdot T_5 \cdot t_{psd2}$
6)	$T_6 = -T_U + T_F$	$E_6 = 0.1047 \cdot V \cdot T_6 \cdot t_3$
7)	$T_7 = \frac{-(J_L \cdot \eta + J_M) \cdot V}{9.55 \cdot 10^4} \cdot \frac{1}{t_{psd2}} - T_U + T_F$	$E_7 = \frac{0.1047}{2} \cdot V \cdot T_7 \cdot t_{psd2}$

From the calculation results in 1) to 8), find the absolute value (Es) of the sum total of negative energies.

(b) Losses of servo motor and servo amplifier in regenerative mode

The following table lists the efficiencies and other data of the servo motor and servo amplifier in the regenerative mode.

Servo amplifier	Inverse efficiency [%]	Capacitor charging [J]
MR-J4-10B(-RJ)	55	9
MR-J4-20B(-RJ)	75	9
MR-J4-40B(-RJ)	85	11
MR-J4-60B(-RJ)	85	11
MR-J4-70B(-RJ)	85	18
MR-J4-100B(-RJ)	85	18
MR-J4-200B(-RJ)	85	36
MR-J4-350B(-RJ)	85	40
MR-J4-500B(-RJ)	90	45
MR-J4-700B(-RJ)	90	70
MR-J4-11KB(-RJ)	90	120
MR-J4-15KB(-RJ)	90	170
MR-J4-22KB(-RJ)	90	250

Servo amplifier	Inverse efficiency [%]	Capacitor charging [J]
MR-J4-60B4(-RJ)	85	12
MR-J4-100B4(-RJ)	85	12
MR-J4-200B4(-RJ)	85	25
MR-J4-350B4(-RJ)	85	43
MR-J4-500B4(-RJ)	90	45
MR-J4-700B4(-RJ)	90	70
MR-J4-11KB4(-RJ)	90	120
MR-J4-15KB4(-RJ)	90	170
MR-J4-22KB4(-RJ)	90	250
MR-J4-10B1(-RJ)	55	4
MR-J4-20B1(-RJ)	75	4
MR-J4-40B1(-RJ)	85	10

Inverse efficiency (η): Efficiency including some efficiencies of the servo motor and servo amplifier when rated (regenerative) torque is generated at rated speed. Since the efficiency varies with the speed and generated torque, allow for about 10%.

Capacitor charging (Ec): Energy charged into the electrolytic capacitor in the servo amplifier

Subtract the capacitor charging from the result of multiplying the sum total of regenerative energies by the inverse efficiency to calculate the energy consumed by the regenerative option.

$ER\ [J] = \eta \cdot Es - Ec$

Calculate the power consumption of the regenerative option on the basis of single-cycle operation period tf [s] to select the necessary regenerative option.

$PR\ [W] = ER/tf$

(2) Linear servo motor

(a) Thrust and energy calculation

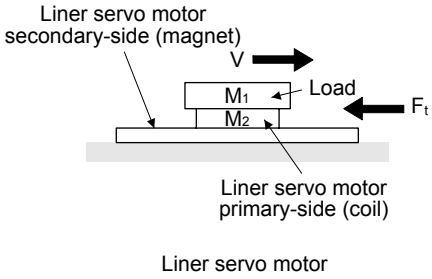

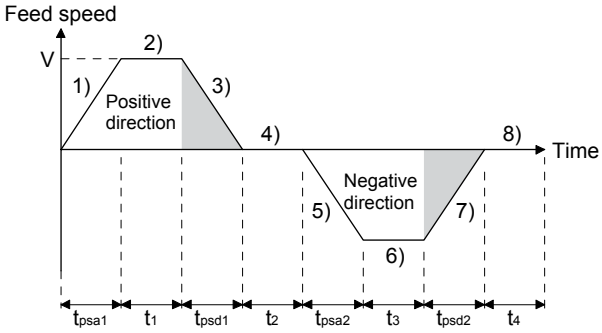

The following shows equations of the linear servo motor thrust and energy at the driving pattern above.

Section	Thrust F of linear servo motor [N]	Energy E [J]
1)	$F_1 = (M_1 + M_2) \cdot V/t_{psa1} + F_t$	$E_1 = V/2 \cdot F_1 \cdot t_{psa1}$
2)	$F_2 = F_1$	$E_2 = V \cdot F_2 \cdot t_1$
3)	$F_3 = -(M_1 + M_2) \cdot V/t_{psd1} + F_t$	$E_3 = V/2 \cdot F_3 \cdot t_{psd1}$
4), 8)	$F_4, F_8 = 0$	$E_4, E_8 = 0$ (No regeneration)
5)	$F_5 = (M_1 + M_2) \cdot V/t_{psa2} + F_t$	$E_5 = V/2 \cdot F_5 \cdot t_{psa2}$
6)	$F_6 = F_t$	$E_6 = V \cdot F_6 \cdot t_3$
7)	$F_7 = -(M_1 + M_2) \cdot V/t_{psd2} + F_t$	$E_7 = V/2 \cdot F_7 \cdot t_{psd2}$

From the calculation results in 1) to 8), find the absolute value (Es) of the sum total of negative energies.

(b) Losses of servo motor and servo amplifier in regenerative mode

For inverse efficiency and capacitor charging energy, refer to (1) (b) of this section.

(c) Regenerative energy calculation

Subtract the capacitor charging from the result of multiplying the sum total of regenerative energies by the inverse efficiency to calculate the energy consumed by the regenerative resistor.

$ER\ [J] = \eta \cdot Es - Ec$

From the total of ER's whose subtraction results are positive and one-cycle period, the power consumption PR [W] of the regenerative option can be calculated with the following equation.

PR [W] = total of positive ER's/one-cycle operation period (tf)

Select a regenerative option from the PR value. Regenerative option is not required when the energy consumption is equal to or less than the built-in regenerative energy.

11.2.3 Parameter setting

Set [Pr. PA02] according to the option to be used.

[Pr. PA02]

0	0		

Regenerative option selection
00: Regenerative option is not used.
- For servo amplifier of 100 W, regenerative resistor is not used.
- For servo amplifier of 0.2 kW to 7 kW, built-in regenerative resistor is used.
- Supplied regenerative resistors or regenerative option is used with the servo amplifier of 11 kW to 22 kW.

01: FR-BU2/FR-BU2-H/FR-RC/FR-RC-H/FR-CV/FR-CV-H
02: MR-RB032
03: MR-RB12
04: MR-RB32
05: MR-RB30
06: MR-RB50 (Cooling fan is required)
08: MR-RB31
09: MR-RB51 (Cooling fan is required)
0B: MR-RB3N
0C: MR-RB5N (Cooling fan is required)
80: MR-RB1H-4
81: MR-RB3M-4 (Cooling fan is required.)
82: MR-RB3G-4 (Cooling fan is required.)
83: MR-RB5G-4 (Cooling fan is required.)
84: MR-RB34-4 (Cooling fan is required.)
85: MR-RB54-4 (Cooling fan is required.)
91: MR-RB3U-4 (Cooling fan is required.)
92: MR-RB5U-4 (Cooling fan is required.)
FA: When the supplied regenerative resistors or the regenerative option is cooled by the cooling fan to increase the ability with the servo amplifier of 11 kW to 22 kW.

11.2.4 Selection of regenerative option

POINT

- When MR-RB50, MR-RB51, MR-RB5N, MR-RB3M-4, MR-RB3G-4, MR-RB5G-4, MR-RB34-4, MR-RB54-4, MR-RB5K-4, or MR-RB6K-4 is used, a cooling fan is required to cool it. The cooling fan should be prepared by the customer.
- For the wire sizes used for wiring, refer to section 11.9.

The regenerative option generates heat of 100 ˚C higher than the ambient temperature. Fully consider heat dissipation, installation position, wires used, etc. before installing the option. For wiring, use flame-resistant wires or make the wires flame-resistant and keep them away from the regenerative option. Always use twisted cables of max. 5 m length for connection with the servo amplifier.

(1) MR-J4-500B(-RJ) or less/MR-J4-350B4(-RJ) or less

Always remove the wiring from across P+ to D and fit the regenerative option across P+ to C. G3 and G4 are thermal sensor's terminals. Between G3 and G4 is opened when the regenerative option overheats abnormally.

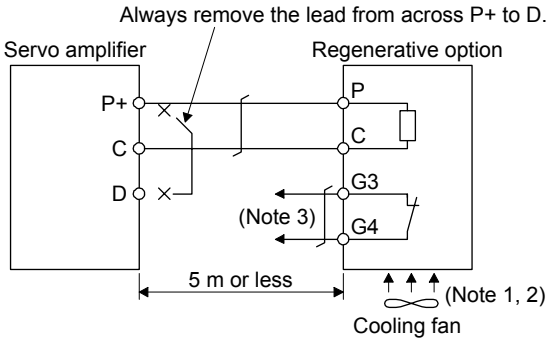

Note 1. When using the MR-RB50, MR-RB5N, MR-RB51, MR-RB3M-4, MR-RB3G-4, or MR-RB5G-4, forcibly cool it with a cooling fan (1.0 m^3/min or more, 92 mm × 92 mm).

2. When the ambient temperature is more than 55 °C and the regenerative load ratio is more than 60% in MR-RB30, MR-RB31, MR-RB32, and MR-RB3N, forcefully cool the air with a cooling fan (1.0 m^3/min or more, 92 mm × 92 mm). A cooling fan is not required if the ambient temperature is 35 °C or less. (A cooling fan is required for the shaded area in the following graph.)

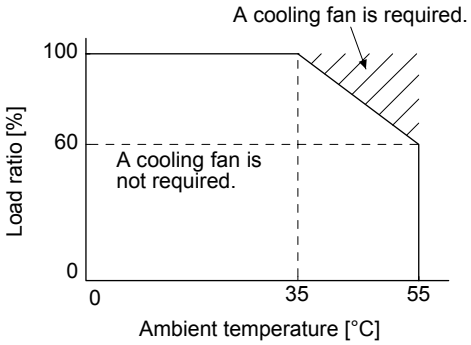

3. Make up a sequence which will switch off the magnetic contactor when abnormal heating occurs.

G3-G4 contact specifications

Maximum voltage: 120 V AC/DC

Maximum current: 0.5 A/4.8 V DC

Maximum capacity: 2.4 VA

(2) MR-J4-500B4(-RJ)/MR-J4-700B(-RJ)/MR-J4-700B4(-RJ)

Always remove the wiring (across P+ to C) of the servo amplifier built-in regenerative resistor and fit the regenerative option across P+ to C. G3 and G4 are thermal sensor's terminals. Between G3 and G4 is opened when the regenerative option overheats abnormally.

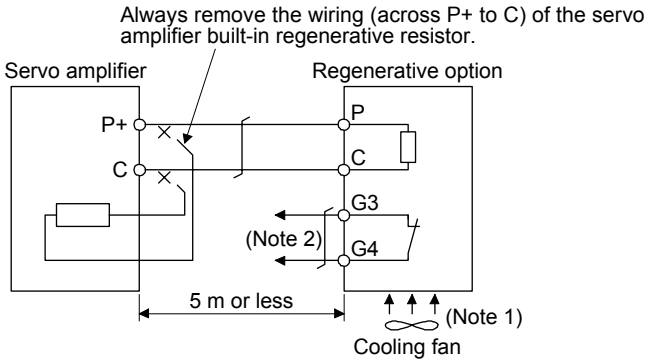

Note 1. When using the MR-RB51, MR-RB34-4, MR-RB54-4, MR-RB3U-4, or MR-RB5U-4, forcibly cool it with a cooling fan (1.0 m^3/min or more, 92 mm × 92 mm).

2. Make up a sequence which will switch off the magnetic contactor when abnormal heating occurs.

G3-G4 contact specifications

Maximum voltage: 120 V AC/DC

Maximum current: 0.5 A/4.8 V DC

Maximum capacity: 2.4 VA

When using the regenerative option, remove the servo amplifier's built-in regenerative resistor wires (across P+ to C), fit them back to back, and secure them to the frame with the accessory screw as shown below.

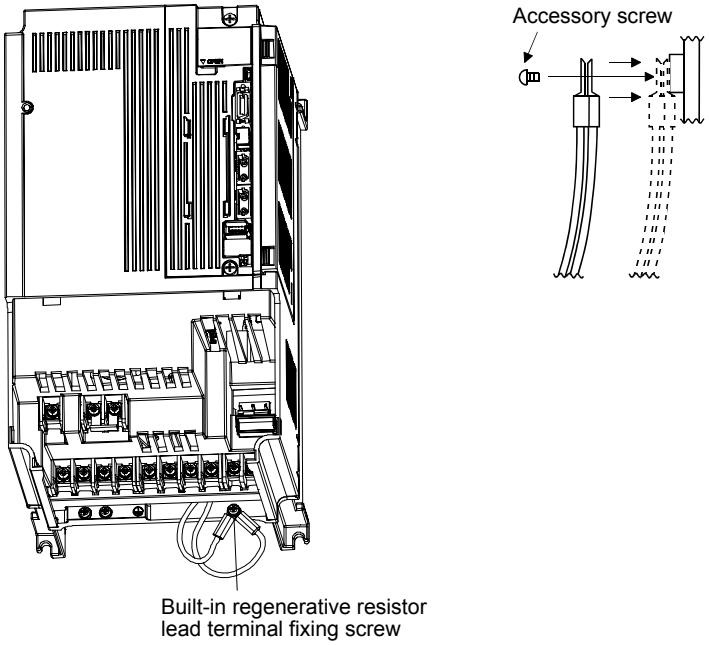

(3) MR-J4-11KB(-RJ) to MR-J4-22KB(-RJ)/MR-J4-11KB4(-RJ) to MR-J4-22KB4(-RJ) (when using the supplied regenerative resistor)

⚠CAUTION

●Note the followings for supplied regenerative resistors of 11 kW to 22 kW servo amplifiers because they do not have protect covers.

- Touching the resistor will cause a burn because the surface of the parts is a resistive element and very high temperature.
- Even if the power turned off, touching the resistor will cause an electric shock because the capacitor of the servo amplifier is charged for a while.

When using the regenerative resistors supplied to the servo amplifier, the specified number of resistors (4 or 5 resistors) must be connected in series. If they are connected in parallel or in less than the specified number, the servo amplifier may become faulty and/or the regenerative resistors burn. Install the resistors at intervals of about 70 mm. Cooling the resistors with two cooling fans (1.0 m^3/min or more, 92 mm × 92 mm) improves the regeneration capability. In this case, set "_ _ F A" in [Pr. PA02].

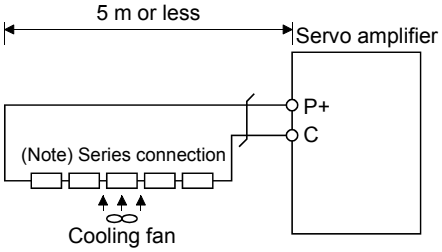

Note. The number of resistors connected in series depends on the resistor type. The thermal sensor is not mounted on the attached regenerative resistor. An abnormal heating of resistor may be generated at a regenerative circuit failure. Install a thermal sensor near the resistor and establish a protective circuit to shut off the main circuit power supply when abnormal heating occurs. The detection level of the thermal sensor varies according to the settings of the resistor. Set the thermal sensor in the most appropriate position on your design basis, or use the thermal sensor built-in regenerative option. (MR-RB5R, MR-RB9F, MR-RB9T, MR-RB5K-4, or MR-RB6K-4)

Servo amplifier	Regenerative resistor	Regenerative power [W]		Resultant resistance [Ω]	Number of resistors
		Normal	Cooling		
MR-J4-11KB(-RJ)	GRZG400-0.8Ω	500	800	3.2	4
MR-J4-15KB(-RJ)	GRZG400-0.6Ω	850	1300	3	5
MR-J4-22KB(-RJ)	GRZG400-0.5Ω			2.5	
MR-J4-11KB4(-RJ)	GRZG400-2.5Ω	500	800	10	4
MR-J4-15KB4(-RJ) MR-J4-22KB4(-RJ)	GRZG400-2Ω	850	1300	10	5

(4) MR-J4-11KB-PX to MR-J4-22KB-PX/MR-J4-11KB-RZ to MR-J4-22KB-RZ/MR-J4-11KB4-PX to MR-J4-22KB4-PX/MR-J4-11KB4-RZ to MR-J4-22KB4-RZ (when using the regenerative option)

The MR-J4-11KB-PX to MR-J4-22KB-PX, MR-J4-11KB-RZ to MR-J4-22KB-RZ, MR-J4-11KB4-PX to MR-J4-22KB4-PX, and MR-J4-11KB4-RZ to MR-J4-22KB4-RZ servo amplifiers are not supplied with regenerative resistors. When using any of these servo amplifiers, always use the regenerative option MR-RB5R, MR-RB9F, MR-RB9T, MR-RB5K-4, and MR-RB6K-4.

Cooling the regenerative option with cooling fans improves regenerative capability. G3 and G4 are thermal sensor's terminals. Between G3 and G4 is opened when the regenerative option overheats abnormally.

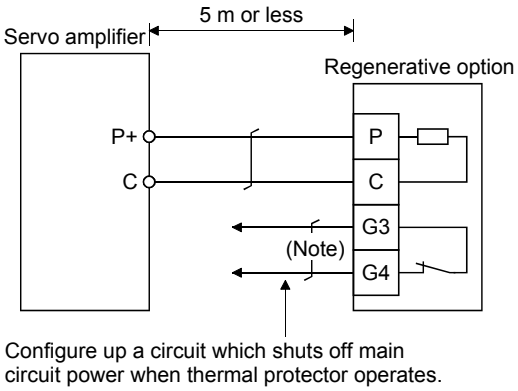

Note. G3-G4 contact specifications

Maximum voltage: 120 V AC/DC

Maximum current: 0.5 A/4.8 V DC

Maximum capacity: 2.4 VA

Servo amplifier	Regenerative option	Resistance [Ω]	Regenerative power [W]	
			Without cooling fans	With cooling fans
MR-J4-11KB-PX MR-J4-11KB-RZ	MR-RB5R	3.2	500	800
MR-J4-15KB-PX MR-J4-15KB-RZ	MR-RB9F	3	850	1300
MR-J4-22KB-PX MR-J4-22KB-RZ	MR-RB9T	2.5	850	1300
MR-J4-11KB4-PX MR-J4-11KB4-RZ	MR-RB5K-4	10	500	800
MR-J4-15KB4-PX MR-J4-15KB4-RZ MR-J4-22KB4-PX MR-J4-22KB4-RZ	MR-RB6K-4	10	850	1300

When using cooling fans, install them using the mounting holes provided in the bottom of the regenerative option.

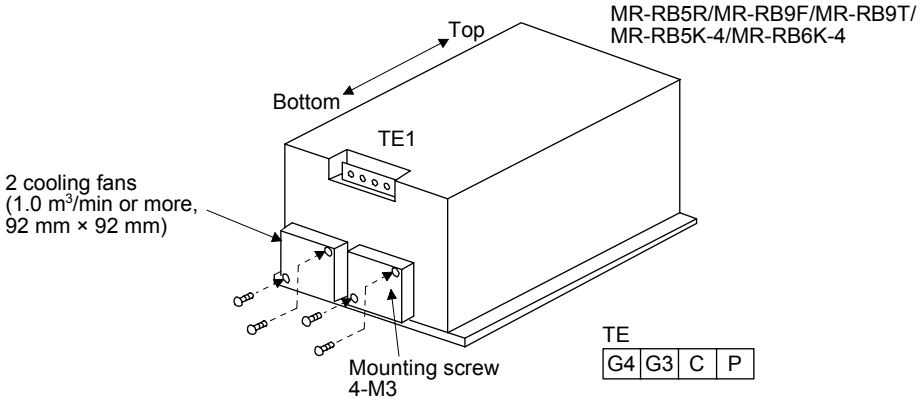

11.2.5 Dimensions

(1) MR-RB12

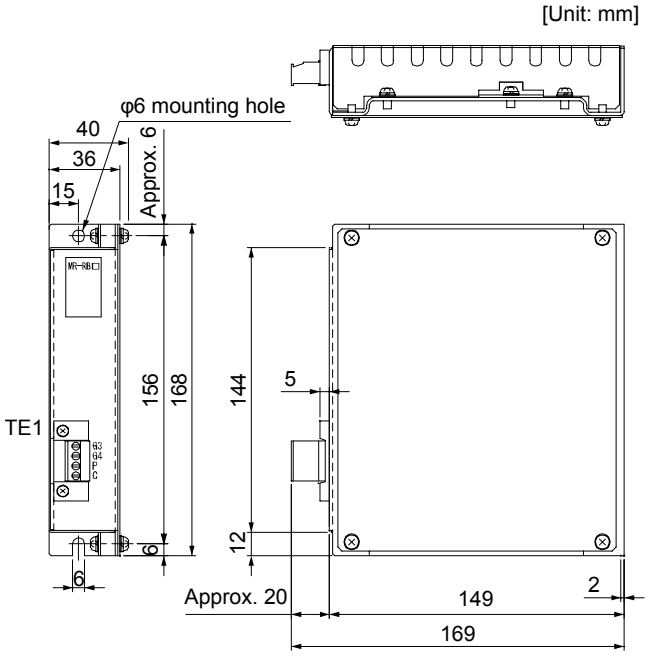

- TE1 terminal block

G3
G4
P
C

Applicable wire size: 0.2 mm^2 to 2.5 mm^2 (AWG 24 to 12)
Tightening torque: 0.5 to 0.6 [N•m]

- Mounting screw
  Screw size: M5
  Tightening torque: 3.24 [N•m]

Mass: 1.1 [kg]

(2) MR-RB30/MR-RB31/MR-RB32/MR-RB3N/MR-RB34-4/MR-RB3M-4/MR-RB3G-4/MR-RB3U-4

[Unit: mm]

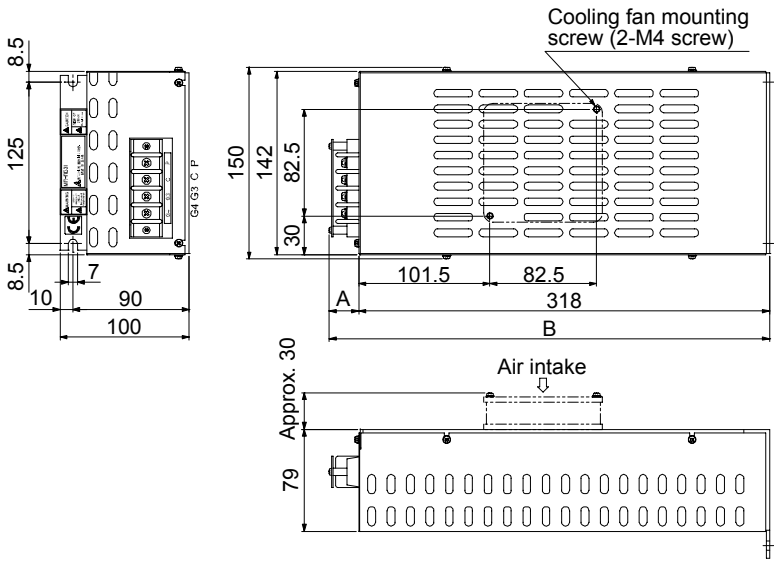

・Terminal block

P
C
G3
G4

Terminal screw size: M4
Tightening torque: 1.2 [N•m]

・Mounting screw
Screw size: M6
Tightening torque: 5.4 [N•m]

Regenerative option	Variable dimensions		Mass [kg]
	A	B	
MR-RB30	17	335	2.9
MR-RB31			
MR-RB32			
MR-RB3N			
MR-RB34-4	23	341	
MR-RB3M-4			
MR-RB3G-4			
MR-RB3U-4			

(3) MR-RB50/MR-RB51/MR-RB5N/MR-RB54-4/MR-RB5G-4/MR-RB5U-4

[Unit: mm]

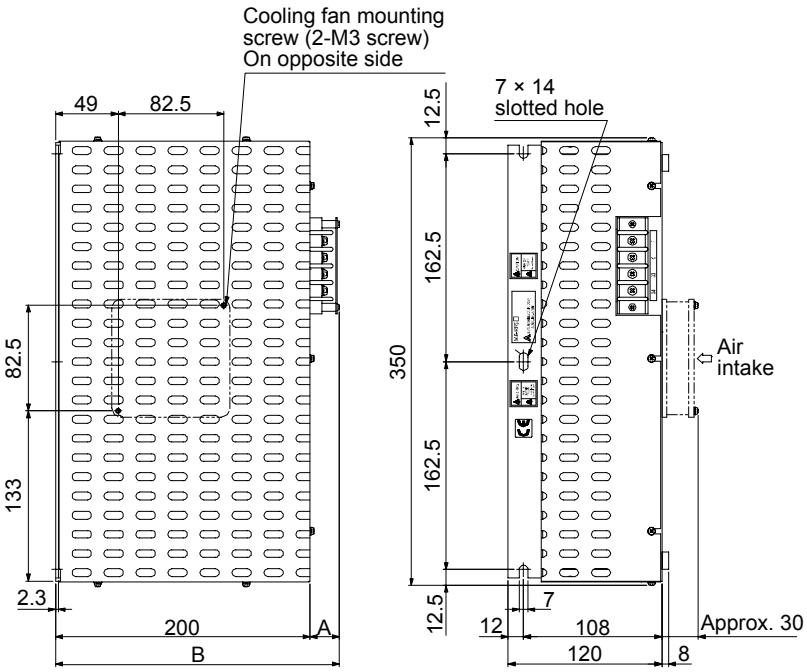

・Terminal block

P
C
G3
G4

Terminal screw size: M4
Tightening torque: 1.2 [N•m]

・Mounting screw
Screw size: M6
Tightening torque: 5.4 [N•m]

Regenerative option	Variable dimensions		Mass [kg]
	A	B	
MR-RB50	17	217	5.6
MR-RB51			
MR-RB5N			
MR-RB54-4	23	223	
MR-RB5G-4			
MR-RB5U-4			

(4) MR-RB032

[Unit: mm]

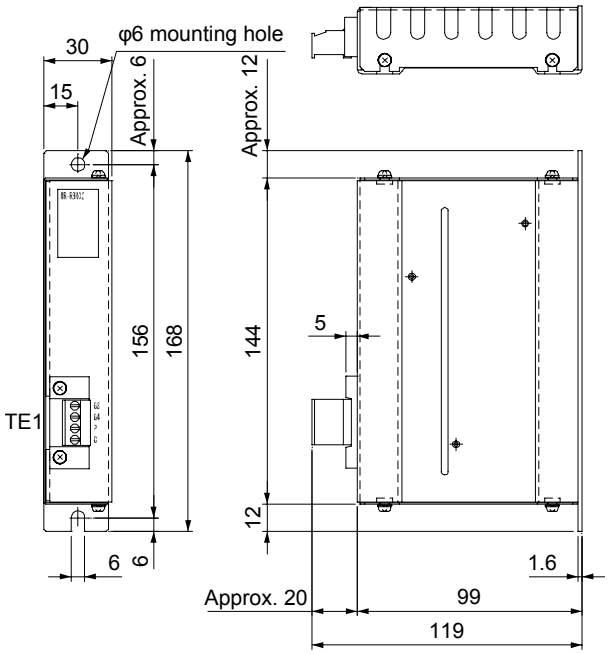

・TE1 terminal block

G3
G4
P
C

Applicable wire size: 0.2 mm^2 to 2.5 mm^2 (AWG 24 to 12)
Tightening torque: 0.5 to 0.6 [N•m]

・Mounting screw
Screw size: M5
Tightening torque: 3.24 [N•m]

Mass: 0.5 [kg]

(5) MR-RB5R/MR-RB9F/MR-RB9T/MR-RB5K-4/MR-RB6K-4

[Unit: mm]

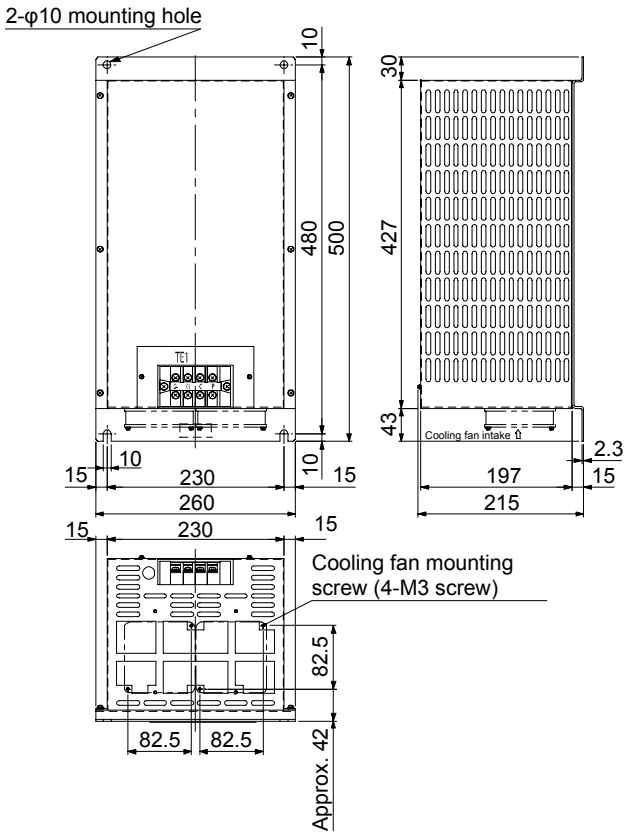

・Terminal block

G4	G3	C	P

Terminal screw size: M5
Tightening torque: 2.0 [N•m]

・Mounting screw
Screw size: M8
Tightening torque: 13.2 [N•m]

Regenerative option	Mass [kg]
MR-RB5R	10
MR-RB9F	11
MR-RB9T	
MR-RB5K-4	10
MR-RB6K-4	11

(6) MR-RB1H-4

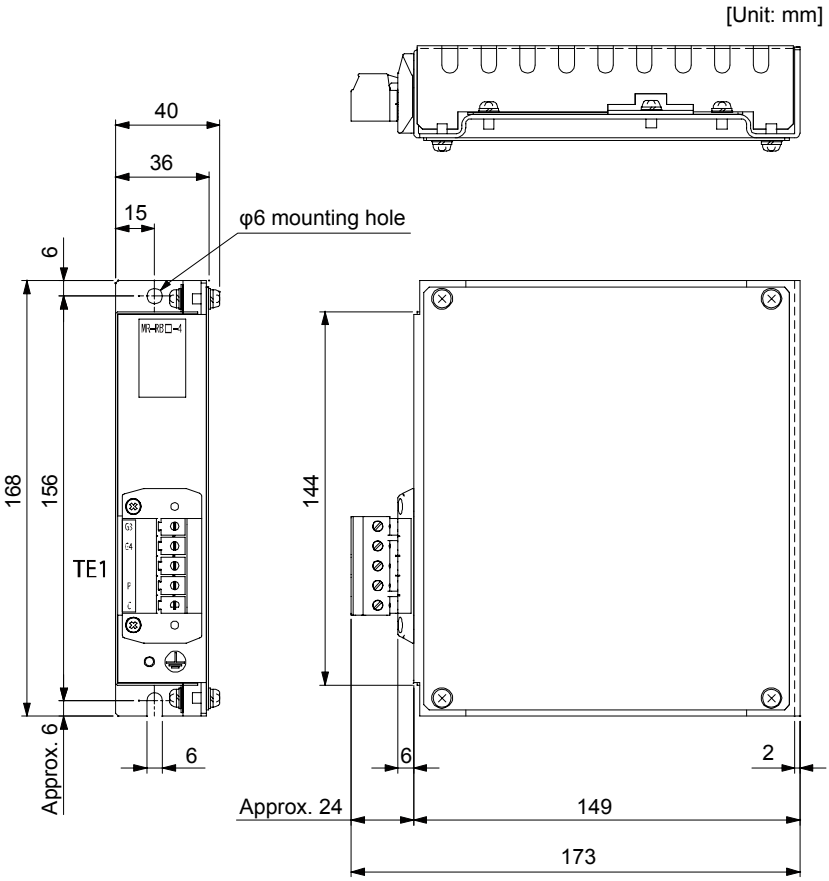

Terminal

G3
G4
P
C

Applicable wire size: AWG 24 to 10
Tightening torque: 0.5 to 0.6 [N•m]

Mounting screw
Screw size: M5
Tightening torque: 3.24 [N•m]

Mass: 1.1 [kg]

(7) GRZG400-0.8Ω/GRZG400-0.6Ω/GRZG400-0.5Ω/GRZG400-2.5Ω/GRZG400-2.0Ω (standard accessories)

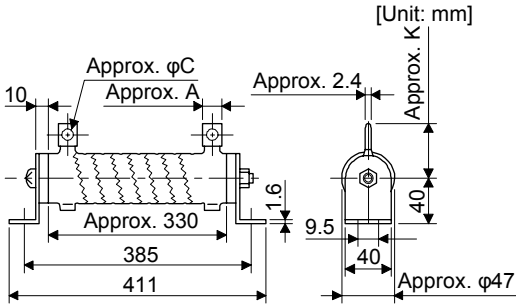

Regenerative resistor	Variable dimensions			Mounting screw size	Tightening torque [N•m]	Mass [kg]
	A	C	K			
GRZG400-0.8Ω	10	5.5	39	M8	13.2	0.8
GRZG400-0.6Ω GRZG400-0.5Ω	16	8.2	46			
GRZG400-2.5Ω GRZG400-2.0Ω	10	5.5	39			

11.3 FR-BU2-(H) brake unit

POINT

- Use a 200 V class brake unit and a resistor unit with a 200 V class servo amplifier, and a 400 V class brake unit and a resistor unit with a 400 V class servo amplifier. Combination of different voltage class units cannot be used.
- When a brake unit and a resistor unit are installed horizontally or diagonally, the heat dissipation effect diminishes. Install them on a flat surface vertically.
- The temperature of the resistor unit case will be higher than the ambient temperature by 100 ˚C or over. Keep cables and flammable materials away from the case.
- Ambient temperature condition of the brake unit is between -10 ˚C and 50 ˚C. Note that the condition is different from the ambient temperature condition of the servo amplifier (between 0 ˚C and 55 ˚C).
- Configure the circuit to shut down the power-supply with the alarm output of the brake unit and the resistor unit under abnormal condition.
- Use the brake unit with a combination indicated in section 11.3.1.
- For executing a continuous regenerative operation, use FR-RC-(H) power regeneration converter or FR-CV-(H) power regeneration common converter.
- Brake unit and regenerative options (Regenerative resistor) cannot be used simultaneously.

Connect the brake unit to the bus of the servo amplifier. As compared to the MR-RB regenerative option, the brake unit can return larger power. Use the brake unit when the regenerative option cannot provide sufficient regenerative capability.
When using the brake unit, set [Pr. PA02] to "_ _ 0 1".
When using the brake unit, always refer to the FR-BU2 Instruction Manual.

11.3.1 Selection

Use a combination of servo amplifier, brake unit and resistor unit listed below.

Brake unit		Resistor unit	Number of connected units	Permissible continuous power [kW]	Resultant resistance [Ω]	Applicable servo amplifier (Note 3)
200 V class	FR-BU2-15K	FR-BR-15K	1	0.99	8	MR-J4-500B(-RJ) (Note 1)
			2 (parallel)	1.98	4	MR-J4-500B(-RJ) MR-J4-700B(-RJ) MR-J4-11KB(-RJ) MR-J4-15KB(-RJ)
	FR-BU2-30K	FR-BR-30K	1	1.99	4	MR-J4-500B(-RJ) MR-J4-700B(-RJ) MR-J4-11KB(-RJ) MR-J4-15KB(-RJ)
	FR-BU2-55K	FR-BR-55K	1	3.91	2	MR-J4-11KB(-RJ) MR-J4-15KB(-RJ) MR-J4-22KB(-RJ)
		MT-BR5-55K	1	5.5	2	MR-J4-22KB(-RJ)

Brake unit		Resistor unit	Number of connected units	Permissible continuous power [kW]	Resultant resistance [Ω]	Applicable servo amplifier (Note 3)
400 V class	FR-BU2-H30K	FR-BR-H30K	1	1.99	16	MR-J4-500B4(-RJ) MR-J4-700B4(-RJ) MR-J4-11KB4(-RJ) (Note 2)
	FR-BU2-H55K	FR-BR-H55K	1	3.91	8	MR-J4-11KB4(-RJ) MR-J4-15KB4(-RJ) MR-J4-22KB4(-RJ)
	FR-BU2-H75K	MT-BR5-H75K	1	7.5	6.5	MR-J4-22KB4(-RJ)

Note 1. Only when using servo motor HG-RR353/HG-UR352
2. When HG-JR11K1M4 servo motor is used, limit the torque during power running to 180% or less, or the servo motor speed to 1800 r/min or less.
3. When the brake unit is selected by using the capacity selection software, a brake unit other than the combinations listed may be shown. Refer to the combinations displayed on the capacity selection software for detailed combinations.

11.3.2 Brake unit parameter setting

Whether a parameter can be changed or not is listed below.

Parameter		Change possible/ impossible	Remarks
No.	Name		
0	Brake mode switchover	Impossible	Do not change the parameter.
1	Monitor display data selection	Possible	Refer to the FR-BU2 Instruction Manual.
2	Input terminal function selection 1	Impossible	Do not change the parameter.
3	Input terminal function selection 2		
77	Parameter write selection		
78	Cumulative energization time carrying-over times		
CLr	Parameter clear		
ECL	Alarm history clear		
C1	For manufacturer setting		

11.3.3 Connection example

POINT
●EM2 has the same function as EM1 in the torque control mode. ●Connecting PR terminal of the brake unit to P+ terminal of the servo amplifier results in brake unit malfunction. Always connect the PR terminal of the brake unit to the PR terminal of the resistor unit.

(1) Combination with FR-BR-(H) resistor unit

(a) When connecting a brake unit to a servo amplifier

1) 200 V class

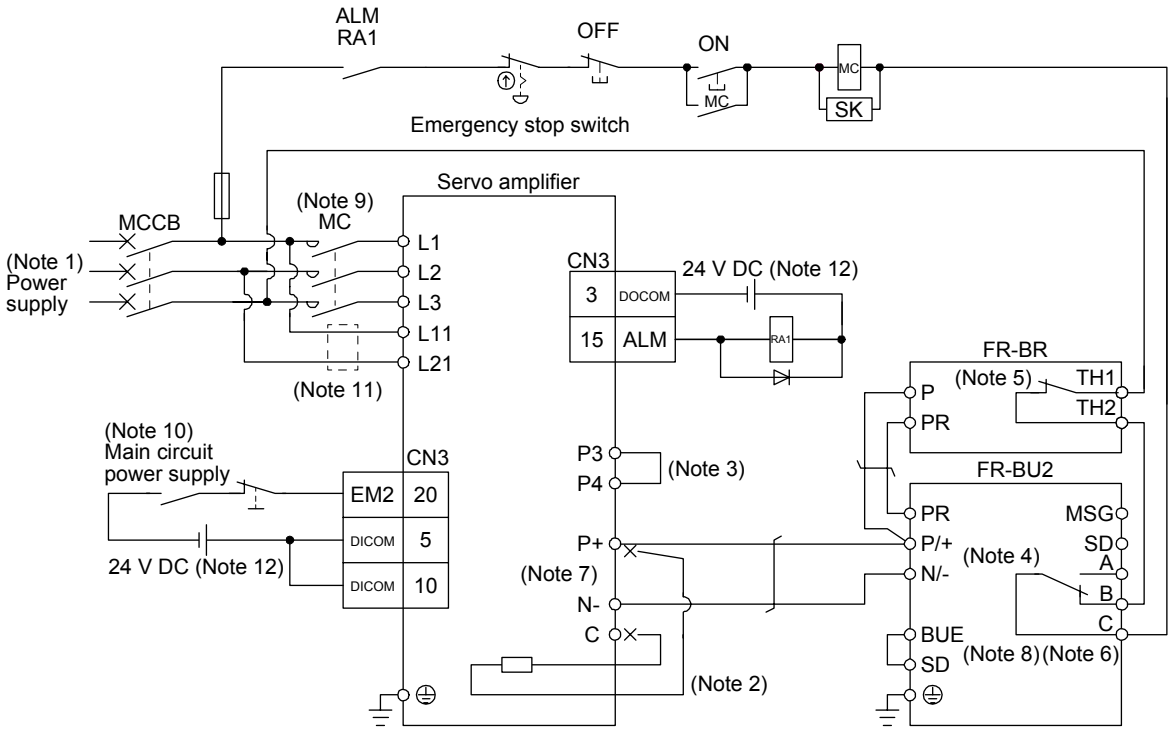

Note 1. For the power supply specifications, refer to section 1.3.
2. For the servo amplifier of 7 kW, always disconnect the lead wire of built-in regenerative resistor, which is connected to P+ and C terminals. For the servo amplifier of 11 kW to 22 kW, do not connect a supplied regenerative resistor to the P+ and C terminals.
3. Between P3 and P4 is connected by default. When using the power factor improving DC reactor, remove the short bar between P3 and P4. Refer to section 11.11 for details. Additionally, a power factor improving DC reactor and power factor improving AC reactor cannot be used simultaneously.
4. Connect P/+ and N/- terminals of the brake unit to a correct destination. Incorrect connection destination results in servo amplifier and brake unit malfunction.
5. Contact rating: 1b contact, 110 V AC, 5 A/220 V AC, 3 A
Normal condition: TH1-TH2 is conducting. Abnormal condition: TH1-TH2 is not conducting.
6. Contact rating: 230 V AC, 0.3 A/30 V DC, 0.3 A
Normal condition: B-C is conducting./A-C is not conducting. Abnormal condition: B-C is not conducting./A-C is conducting.
7. Do not connect more than one cable to each P+ to N- terminals of the servo amplifier.
8. Always connect BUE and SD terminals. (factory-wired)
9. Depending on the main circuit voltage and operation pattern, bus voltage decreases, and that may cause the forced stop deceleration to shift to the dynamic brake deceleration. When dynamic brake deceleration is not required, slow the time to turn off the magnetic contactor.
10. Configure a circuit to turn off EM2 when the main circuit power is turned off to prevent an unexpected restart of the servo amplifier.
11. When wires used for L11 and L21 are thinner than wires used for L1, L2, and L3, use a molded-case circuit breaker.
12. The illustration of the 24 V DC power supply is divided between input signal and output signal for convenience. However, they can be configured by one.

2) 400 V class

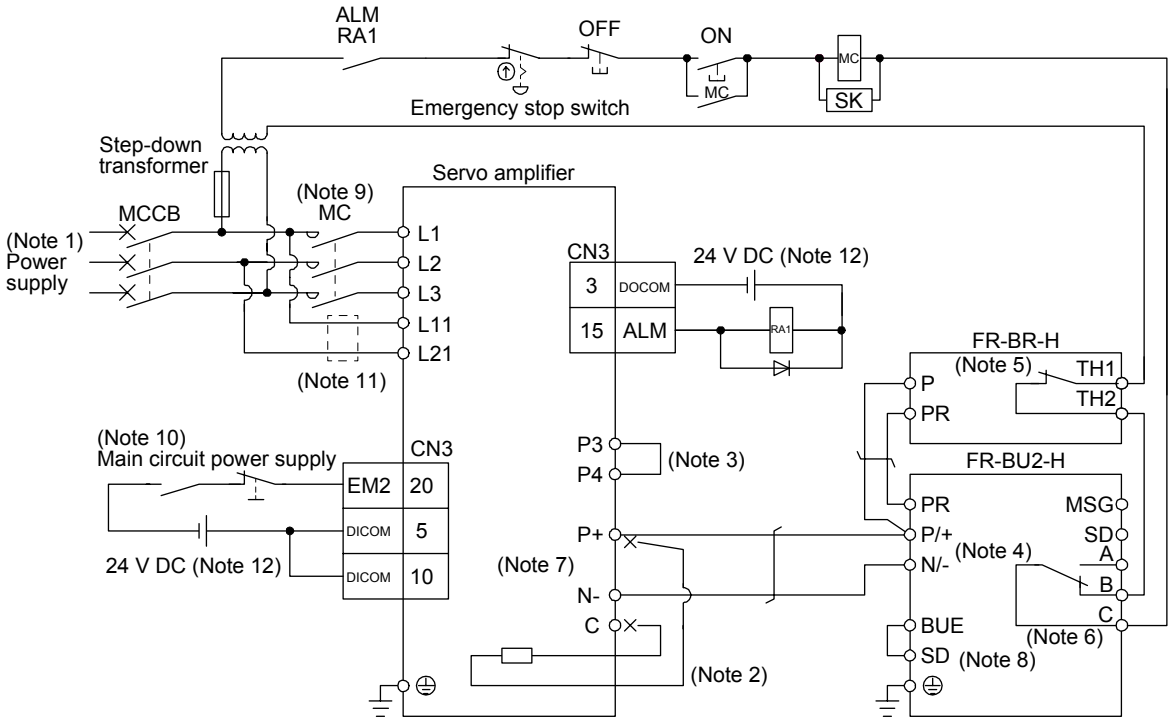

Note 1. For the power supply specifications, refer to section 1.3.

2. For the servo amplifier of 5 kW and 7 kW, always disconnect the lead wire of built-in regenerative resistor, which is connected to P+ and C terminals. For the servo amplifier of 11 kW to 22 kW, do not connect a supplied regenerative resistor to the P+ and C terminals.

3. Between P3 and P4 is connected by default. When using the power factor improving DC reactor, remove the short bar between P3 and P4. Refer to section 11.11 for details. Additionally, a power factor improving DC reactor and power factor improving AC reactor cannot be used simultaneously.

4. Connect P/+ and N/- terminals of the brake unit to a correct destination. Incorrect connection destination results in servo amplifier and brake unit malfunction.

5. Contact rating: 1b contact, 110 V AC, 5 A/220 V AC, 3 A
Normal condition: TH1-TH2 is conducting. Abnormal condition: TH1-TH2 is not conducting.

6. Contact rating: 230 V AC, 0.3 A/30 V DC, 0.3 A
Normal condition: B-C is conducting./A-C is not conducting. Abnormal condition: B-C is not conducting./A-C is conducting.

7. Do not connect more than one cable to each P+ to N- terminals of the servo amplifier.

8. Always connect BUE and SD terminals. (factory-wired)

9. Depending on the main circuit voltage and operation pattern, bus voltage decreases, and that may cause the forced stop deceleration to shift to the dynamic brake deceleration. When dynamic brake deceleration is not required, slow the time to turn off the magnetic contactor.

10. Configure a circuit to turn off EM2 when the main circuit power is turned off to prevent an unexpected restart of the servo amplifier.

11. When wires used for L11 and L21 are thinner than wires used for L1, L2, and L3, use a molded-case circuit breaker.

12. The illustration of the 24 V DC power supply is divided between input signal and output signal for convenience. However, they can be configured by one.

(b) When connecting two brake units to a servo amplifier

POINT

- To use brake units with a parallel connection, use two sets of FR-BU2 brake unit. Combination with other brake unit results in alarm occurrence or malfunction.
- Always connect the terminals for master/slave (MSG to MSG, SD to SD) between the two brake units.
- Do not connect the servo amplifier and brake units as below. Connect the cables with a terminal block to distribute as indicated in this section.

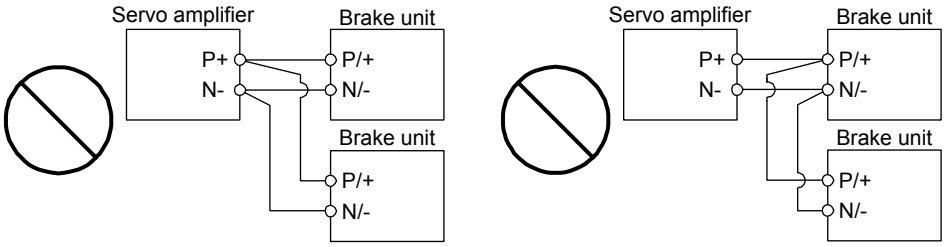

Connecting two cables to P+ and N- terminals

Passing wiring

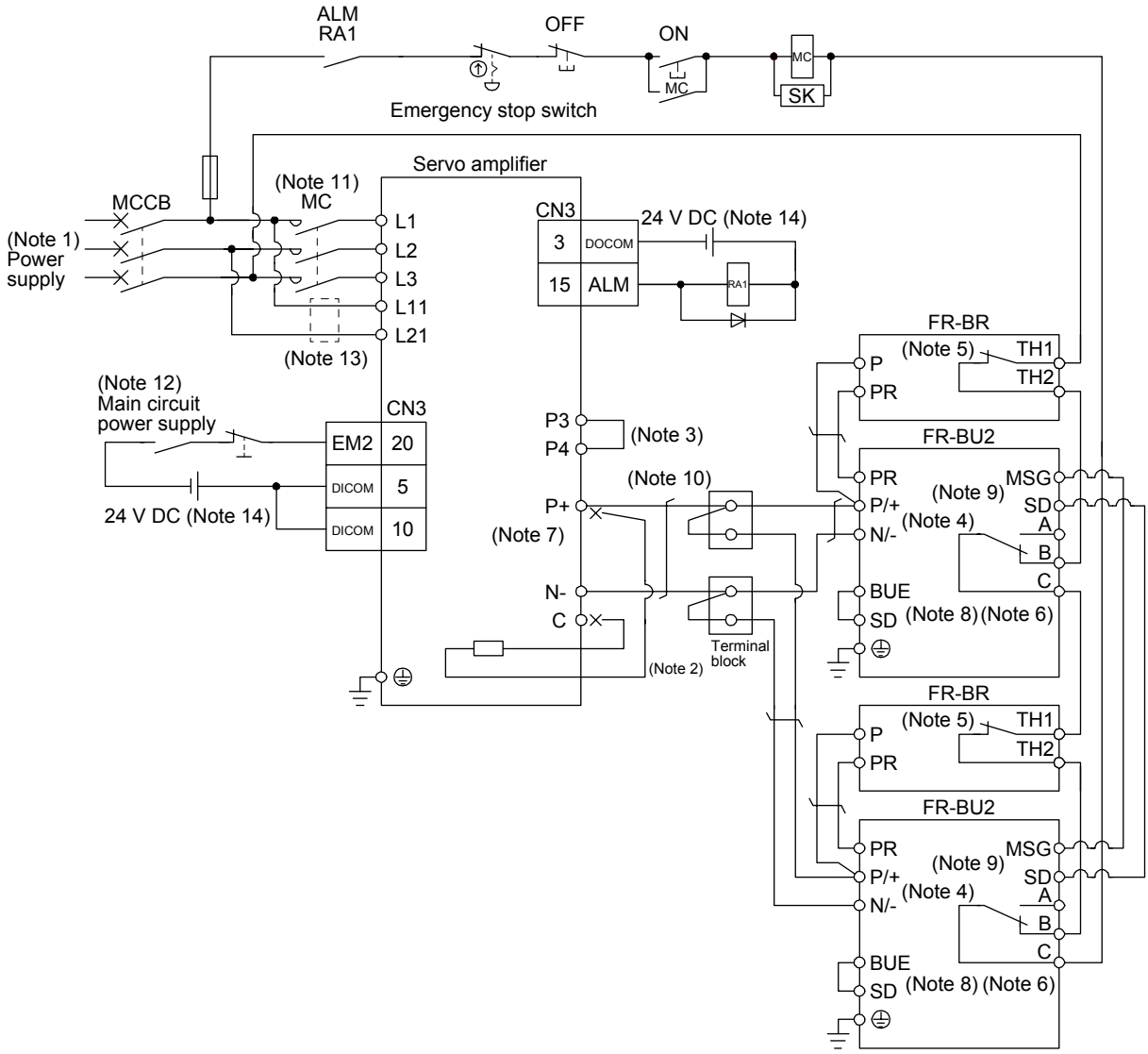

Note
1. For the power supply specifications, refer to section 1.3.
2. For the servo amplifier of 7 kW, always disconnect the lead wire of built-in regenerative resistor, which is connected to P+ and C terminals. For the servo amplifier of 11 kW to 22 kW, do not connect a supplied regenerative resistor to the P+ and C terminals.
3. Between P3 and P4 is connected by default. When using the power factor improving DC reactor, remove the short bar between P3 and P4. Refer to section 11.11 for details. Additionally, a power factor improving DC reactor and power factor improving AC reactor cannot be used simultaneously.
4. Connect P/+ and N/- terminals of the brake unit to a correct destination. Incorrect connection destination results in servo amplifier and brake unit malfunction.
5. Contact rating: 1b contact, 110 V AC, 5 A/220 V AC, 3 A
   Normal condition: TH1-TH2 is conducting. Abnormal condition: TH1-TH2 is not conducting.
6. Contact rating: 230 V AC, 0.3 A/30 V DC, 0.3 A
   Normal condition: B-C is conducting./A-C is not conducting. Abnormal condition: B-C is not conducting./A-C is conducting.
7. Do not connect more than one cable to each P+ to N- terminals of the servo amplifier.
8. Always connect BUE and SD terminals. (factory-wired)
9. Connect MSG and SD terminals of the brake unit to a correct destination. Incorrect connection destination results in servo amplifier and brake unit malfunction.
10. For connecting P+ and N- terminals of the servo amplifier to the terminal block, use the cable indicated in (3) (b) of this section.
11. Depending on the main circuit voltage and operation pattern, bus voltage decreases, and that may cause the forced stop deceleration to shift to the dynamic brake deceleration. When dynamic brake deceleration is not required, slow the time to turn off the magnetic contactor.
12. Configure a circuit to turn off EM2 when the main circuit power is turned off to prevent an unexpected restart of the servo amplifier.
13. When wires used for L11 and L21 are thinner than wires used for L1, L2, and L3, use a molded-case circuit breaker.
14. The illustration of the 24 V DC power supply is divided between input signal and output signal for convenience. However, they can be configured by one.

(2) Combination with MT-BR5-(H) resistor unit

(a) 200 V class

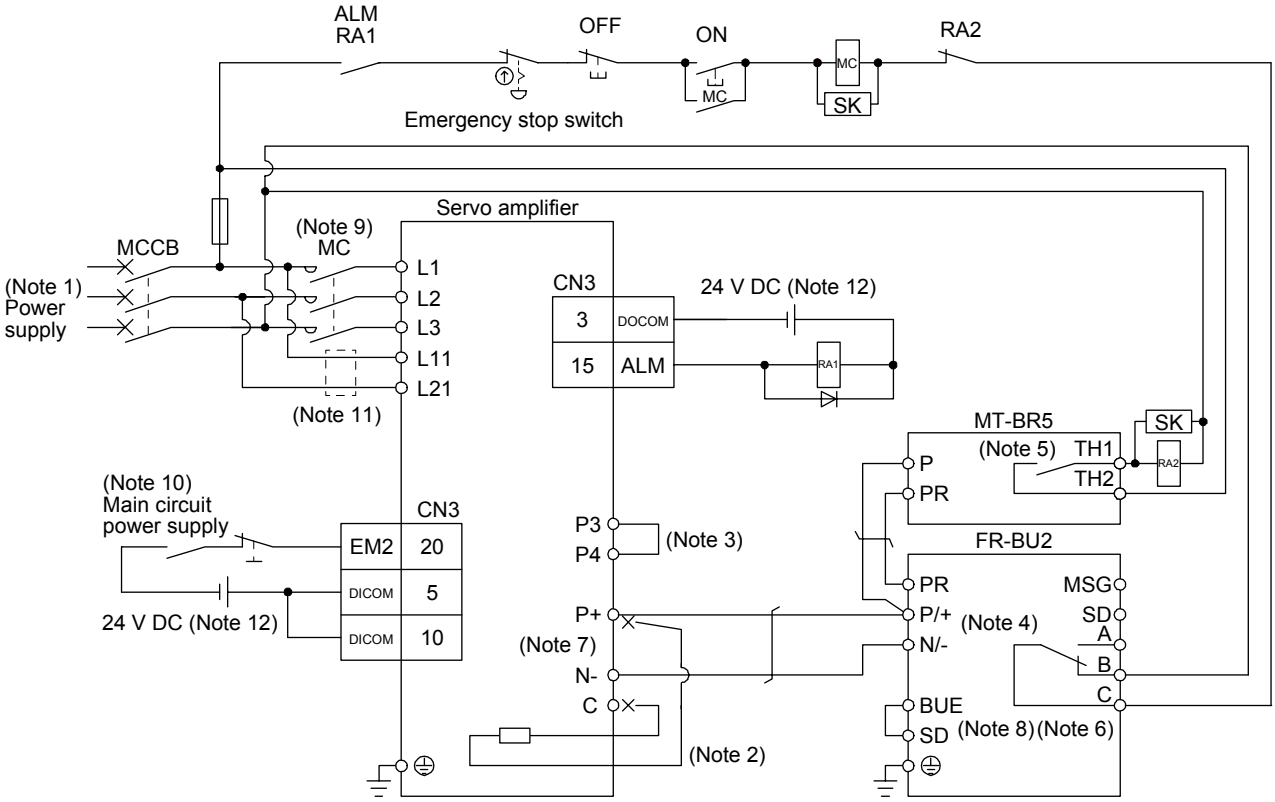

Note 1. For the power supply specifications, refer to section 1.3.

2. Do not connect a supplied regenerative resistor to the P+ and C terminals.

3. Between P3 and P4 is connected by default. When using the power factor improving DC reactor, remove the short bar between P3 and P4. Refer to section 11.11 for details. Additionally, a power factor improving DC reactor and power factor improving AC reactor cannot be used simultaneously.

4. Connect P/+ and N/- terminals of the brake unit to a correct destination. Incorrect connection destination results in servo amplifier and brake unit malfunction.

5. Contact rating: 1a contact, 110 V AC, 5 A/220 V AC, 3 A
Normal condition: TH1-TH2 is not conducting. Abnormal condition: TH1-TH2 is conducting.

6. Contact rating: 230 V AC, 0.3 A/30 V DC, 0.3 A
Normal condition: B-C is conducting./A-C is not conducting. Abnormal condition: B-C is not conducting./A-C is conducting.

7. Do not connect more than one cable to each P+ to N- terminals of the servo amplifier.

8. Always connect BUE and SD terminals. (factory-wired)

9. Depending on the main circuit voltage and operation pattern, bus voltage decreases, and that may cause the forced stop deceleration to shift to the dynamic brake deceleration. When dynamic brake deceleration is not required, slow the time to turn off the magnetic contactor.

10. Configure a circuit to turn off EM2 when the main circuit power is turned off to prevent an unexpected restart of the servo amplifier.

11. When wires used for L11 and L21 are thinner than wires used for L1, L2, and L3, use a molded-case circuit breaker.

12. The illustration of the 24 V DC power supply is divided between input signal and output signal for convenience. However, they can be configured by one.

(b) 400 V class

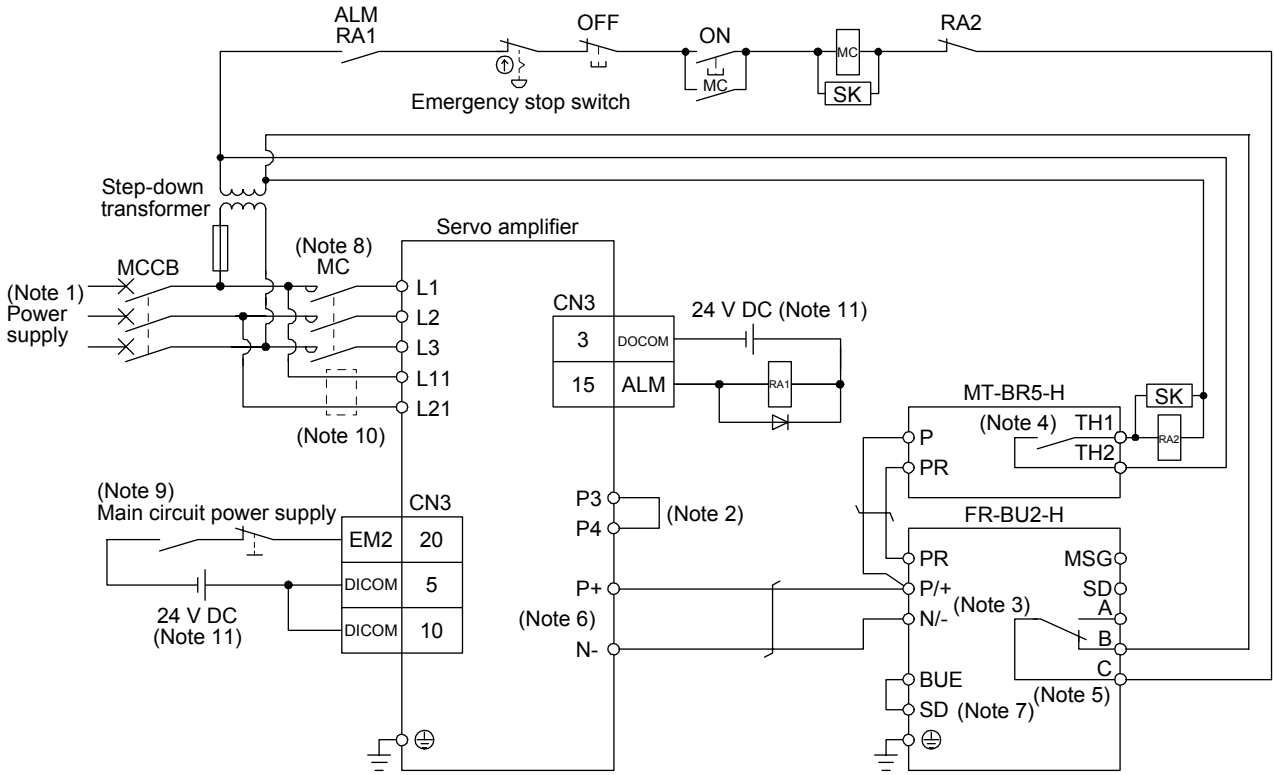

Note 1. For power supply specifications, refer to section 1.3.

2. Between P3 and P4 is connected by default. When using the power factor improving DC reactor, remove the short bar between P3 and P4. Refer to section 11.11 for details. Additionally, a power factor improving DC reactor and power factor improving AC reactor cannot be used simultaneously.

3. Connect P/+ and N/- terminals of the brake unit to a correct destination. Incorrect connection destination results in servo amplifier and brake unit malfunction.

4. Contact rating: 1a contact, 110 V AC, 5 A/220 V AC, 3 A
Normal condition: TH1-TH2 is not conducting. Abnormal condition: TH1-TH2 is conducting.

5. Contact rating: 230 V AC, 0.3 A/30 V DC, 0.3 A
Normal condition: B-C is conducting./A-C is not conducting. Abnormal condition: B-C is not conducting./A-C is conducting.

6. Do not connect more than one cable to each P+ to N- terminals of the servo amplifier.

7. Always connect BUE and SD terminals. (factory-wired)

8. Depending on the main circuit voltage and operation pattern, bus voltage decreases, and that may cause the forced stop deceleration to shift to the dynamic brake deceleration. When dynamic brake deceleration is not required, slow the time to turn off the magnetic contactor.

9. Configure a circuit to turn off EM2 when the main circuit power is turned off to prevent an unexpected restart of the servo amplifier.

10. When wires used for L11 and L21 are thinner than wires used for L1, L2, and L3, use a molded-case circuit breaker.

11. The illustration of the 24 V DC power supply is divided between input signal and output signal for convenience. However, they can be configured by one.

(3) Precautions for wiring

The cables between the servo amplifier and the brake unit, and between the resistor unit and the brake unit should be as short as possible. Always twist the cable longer than 5 m (twist five times or more per one meter). Even when the cable is twisted, the cable should be less than 10 m. Using cables longer than 5 m without twisting or twisted cables longer than 10 m may result in the brake unit malfunction.

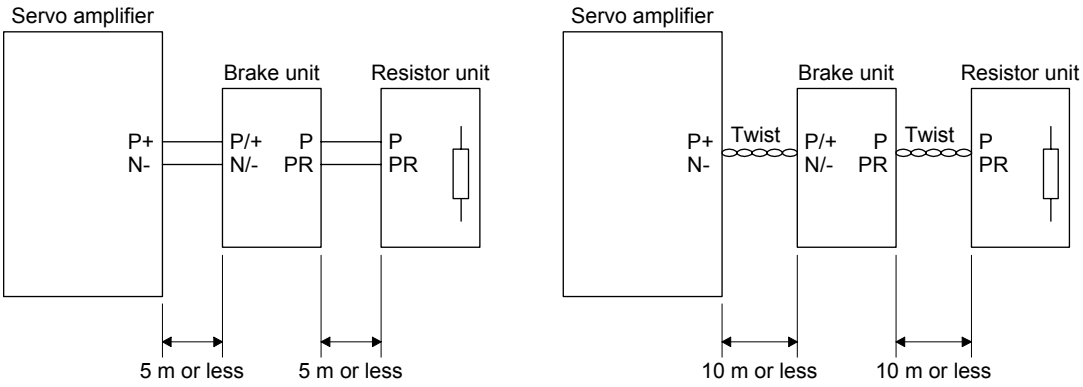

(4) Wires

(a) Wires for the brake unit

For the brake unit, HIV wire (600 V Grade heat-resistant polyvinyl chloride insulated wire) is recommended.

1) Main circuit terminal

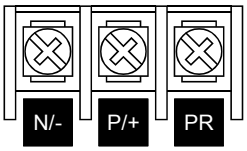

Terminal block

Brake unit		Main circuit terminal screw size	Crimp terminal N/-, P/+, PR,⏚	Tightening torque [N•m]	Wire size N/-, P/+, PR,⏚ HIV wire [mm^2]	Wire size N/-, P/+, PR,⏚ AWG
200 V class	FR-BU2-15K	M4	5.5-4	1.5	3.5	12
	FR-BU2-30K	M5	5.5-5	2.5	5.5	10
	FR-BU2-55K	M6	14-6	4.4	14	6
400 V class	FR-BU2-H30K	M4	5.5-4	1.5	3.5	12
	FR-BU2-H55K	M5	5.5-5	2.5	5.5	10
	FR-BU2-H75K	M6	14-6	4.4	14	6

2) Control circuit terminal

> POINT
>
> ●Under tightening can cause a cable disconnection or malfunction. Over tightening can cause a short circuit or malfunction due to damage to the screw or the brake unit.

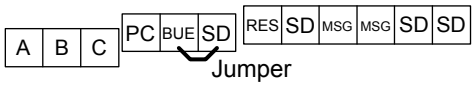

Terminal block

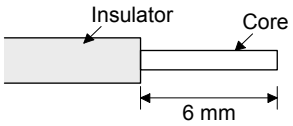

Wire the stripped cable after twisting to prevent the cable from becoming loose. In addition, do not solder it.
Screw size: M3
Tightening torque: 0.5 N•m to 0.6 N•m
Wire size: 0.3 mm^2 to 0.75 mm^2
Screw driver: Small flat-blade screwdriver
(Tip thickness: 0.4 mm/Tip width 2.5 mm)

(b) Cables for connecting the servo amplifier and a distribution terminal block when connecting two sets of the brake unit

Brake unit	Wire size	
	HIV wire [mm^2]	AWG
FR-BU2-15K	8	8

(5) Crimp terminals for P+ and N- terminals of servo amplifier
(a) Recommended crimp terminals

> POINT
>
> ●Some crimp terminals may not be mounted depending on the size. Make sure to use the recommended ones or equivalent ones.

Servo amplifier		Brake unit	Number of connected units	Crimp terminal (Manufacturer)	(Note 1) Applicable tool
200 V class	MR-J4-500B(-RJ)	FR-BU2-15K	1	FVD5.5-S4 (JST)	a
			2	8-4NS (JST) (Note 2)	b
		FR-BU2-30K	1	FVD5.5-S4 (JST)	a
	MR-J4-700B(-RJ)	FR-BU2-15K	2	8-4NS (JST) (Note 2)	b
		FR-BU2-30K	1	FVD5.5-S4 (JST)	a
	MR-J4-11KB(-RJ)	FR-BU2-15K	2	FVD8-6 (JST)	c
		FR-BU2-30K	1	FVD5.5-6 (JST)	a
		FR-BU2-55K	1	FVD14-6 (JST)	d
	MR-J4-15KB(-RJ)	FR-BU2-15K	2	FVD8-6 (JST)	c
		FR-BU2-30K	1	FVD5.5-6 (JST)	a
		FR-BU2-55K	1	FVD14-6 (JST)	d
	MR-J4-22KB(-RJ)	FR-BU2-55K	1	FVD14-8 (JST)	d

Servo amplifier		Brake unit	Number of connected units	Crimp terminal (Manufacturer)	(Note 1) Applicable tool
400 V class	MR-J4-500B4(-RJ)	FR-BU2-H30K	1	FVD5.5-S4 (JST)	a
	MR-J4-700B4(-RJ)	FR-BU2-H30K	1	FVD5.5-S4 (JST)	a
	MR-J4-11KB4(-RJ)	FR-BU2-H30K	1	FVD5.5-6 (JST)	a
		FR-BU2-H55K	1	FVD5.5-6 (JST)	a
	MR-J4-15KB4(-RJ)	FR-BU2-H55K	1	FVD5.5-6 (JST)	a
	MR-J4-22KB4(-RJ)	FR-BU2-H55K	1	FVD5.5-8 (JST)	a
		FR-BU2-H75K	1	FVD14-8 (JST)	d

Note 1. Symbols in the applicable tool field indicate applicable tools in (4) (b) of this section.
2. Coat the crimping part with an insulation tube.

(b) Applicable tool

Symbol	Servo amplifier-side crimp terminals				
	Crimp terminal	Applicable tool			Manufacturer
		Body	Head	Dice	
a	FDV5.5-S4 FDV5.5-6	YNT-1210S			JST
b	8-4NS	YHT-8S			
c	FVD8-6	YF-1 E-4	YNE-38	DH-111 DH-121	
d	FVD14-6 FVD14-8	YF-1 E-4	YNE-38	DH-112 DH-122	

11.3.4 Dimensions

(1) FR-BU2-(H) brake unit

FR-BU2-15K

[Unit: mm]

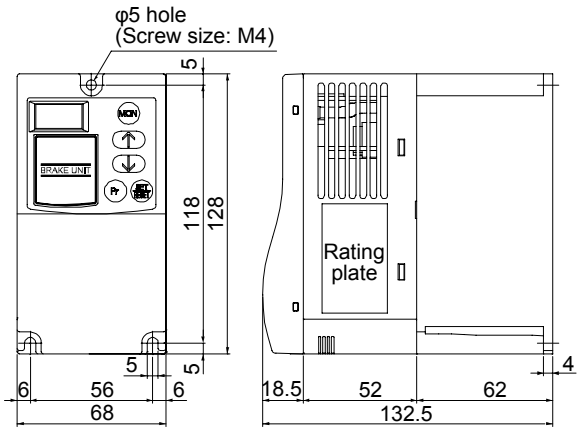

FR-BU2-30K/FR-BU2-H30K

[Unit: mm]

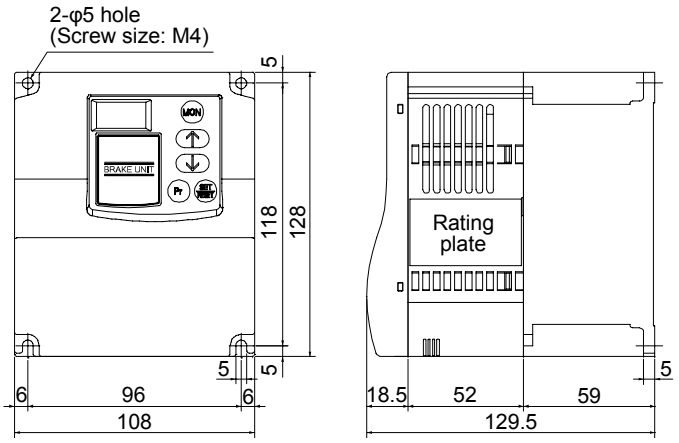

FR-BU2-55K/FR-BU2-H55K/FR-BU2-H75K

[Unit: mm]

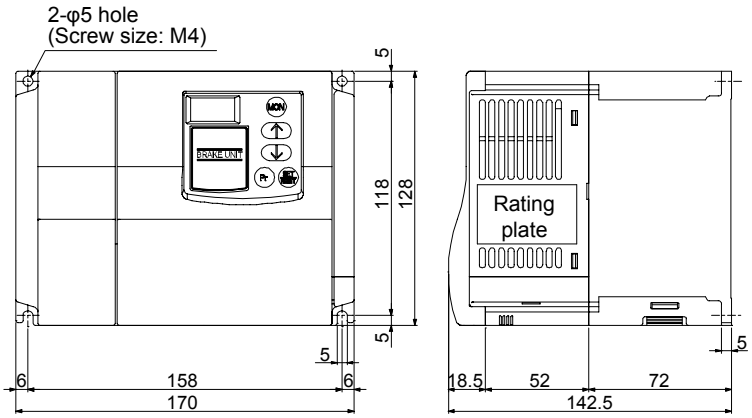

(2) FR-BR-(H) resistor unit

[Unit: mm]

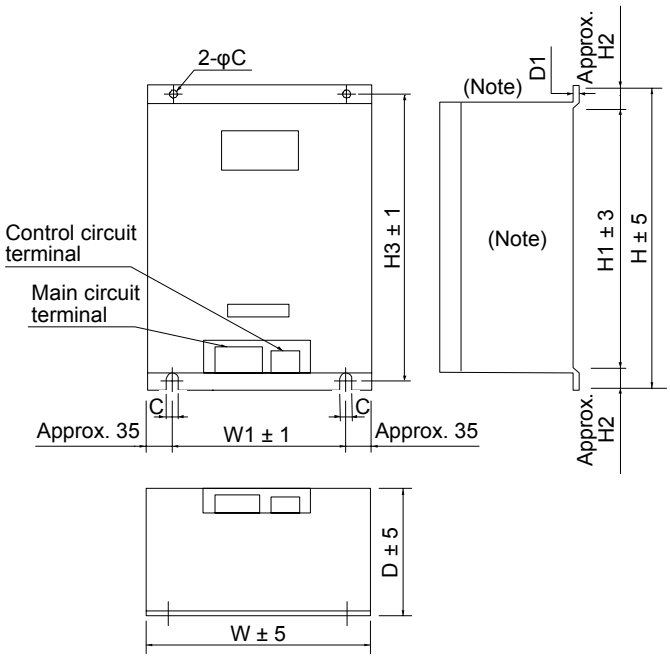

Note. Ventilation ports are provided on both sides and the top. The bottom is open.

Resistor unit		W	W1	H	H1	H2	H3	D	D1	C	Approximate mass [kg]
200 V class	FR-BR-15K	170	100	450	410	20	432	220	3.2	6	15
	FR-BR-30K	340	270	600	560	20	582	220	4	10	30
	FR-BR-55K	480	410	700	620	40	670	450	3.2	12	70
400 V class	FR-BR-H30K	340	270	600	560	20	582	220	4	10	30
	FR-BR-H55K	480	410	700	620	40	670	450	3.2	12	70

(3) MT-BR5-(H) resistor unit

[Unit: mm]

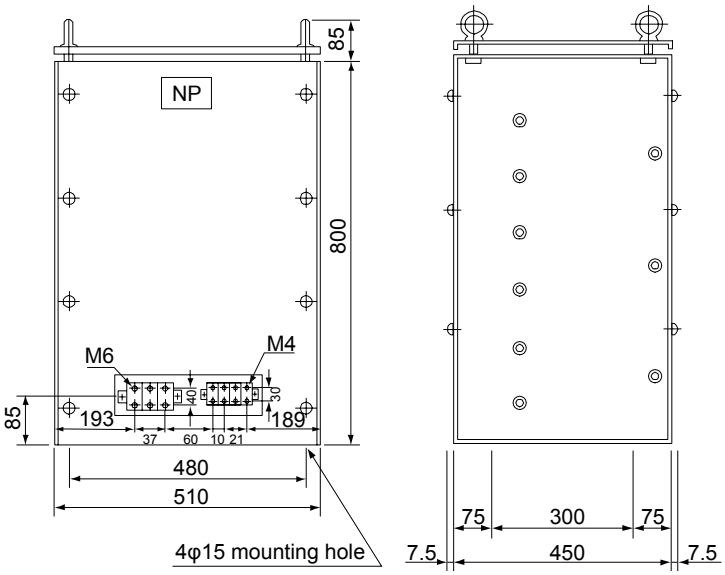

Resistor unit		Resistance	Approximate mass [kg]
200 V class	MT-BR5-55K	2.0 Ω	50
400 V class	MT-BR5-H75K	6.5 Ω	70

11.4 FR-RC-(H) power regeneration converter

POINT
●When using the FR-RC-(H) power regeneration converter, set [Pr. PA04] to "0 0 _ _" to enable EM1 (Forced stop 1). ●When using the FR-RC-(H) power regeneration converter, refer to "Power Regeneration Converter FR-RC Instruction Manual (IB(NA)66330)".

When using the FR-RC-(H) power regeneration converter, set [Pr. PA02] to "_ _ 0 1" and set [Pr. PC20] to "_ _ _ 1".

(1) Selection

The converters can continuously return 75% of the nominal regenerative power. They are applied to the servo amplifiers of the 5 kW to 22 kW.

Power regeneration converter	Nominal regenerative power [kW]	Servo amplifier
FR-RC-15K	15	MR-J4-500B(-RJ) MR-J4-700B(-RJ) MR-J4-11KB(-RJ) MR-J4-15KB(-RJ)
FR-RC-30K	30	
FR-RC-55K	55	MR-J4-22KB(-RJ)
FR-RC-H15K	15	MR-J4-500B4(-RJ) MR-J4-700B4(-RJ)
FR-RC-H30K	30	MR-J4-11KB4(-RJ) MR-J4-15KB4(-RJ)
FR-RC-H55K	55	MR-J4-22KB4(-RJ)

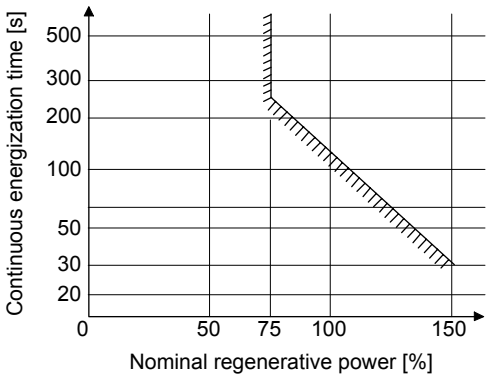

(2) Connection example

POINT
●In this configuration, only the STO function is supported. The forced stop deceleration function is not available.

(a) 200 V class

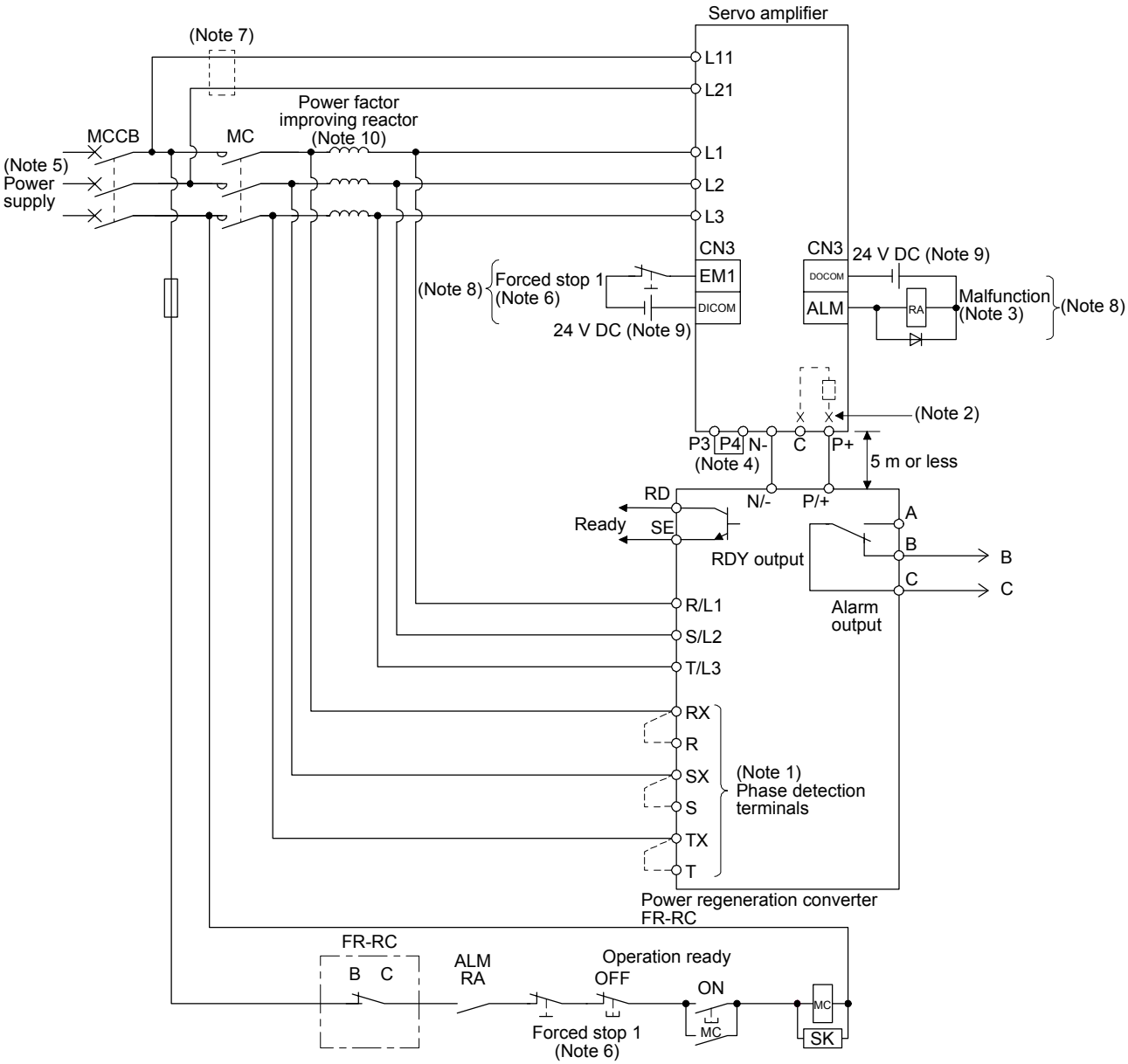

Note 1. When not using the phase detection terminals, fit the jumpers across RX-R, SX-S and TX-T. If the jumpers remain removed, the FR-RC will not operate.
2. For the servo amplifier of 7 kW, always disconnect the lead wire of built-in regenerative resistor, which is connected to the P+ and C terminals. For the servo amplifier of 11 kW to 22 kW, do not connect a supplied regenerative resistor to the P+ and C terminals.
3. If disabling ALM (Malfunction) output with the parameter, configure up the power supply circuit which switches off the magnetic contactor after detection of alarm occurrence on the controller side.
4. Between P3 and P4 is connected by default. When using the power factor improving DC reactor, remove the short bar between P3 and P4. Refer to section 11.11 for details. Additionally, a power factor improving DC reactor and power factor improving AC reactor cannot be used simultaneously.
5. For the power supply specifications, refer to section 1.3.
6. Set [Pr. PA04] to "0 0 _ _" to enable EM1 (Forced stop 1). Configure up the circuit which shuts off main circuitpower with external circuit at EM1 (Forced stop 1) off.
7. When wires used for L11 and L21 are thinner than wires used for L1, L2, and L3, use a molded-case circuit breaker.
8. This diagram is for sink I/O interface. For source I/O interface, refer to section 3.8.3.
9. The illustration of the 24 V DC power supply is divided between input signal and output signal for convenience. However, they can be configured by one.
10. For selection of power factor improving AC reactors, refer to "Power Regeneration Converter FR-RC Instruction Manual (IB(NA)66330)".

(b) 400 V class

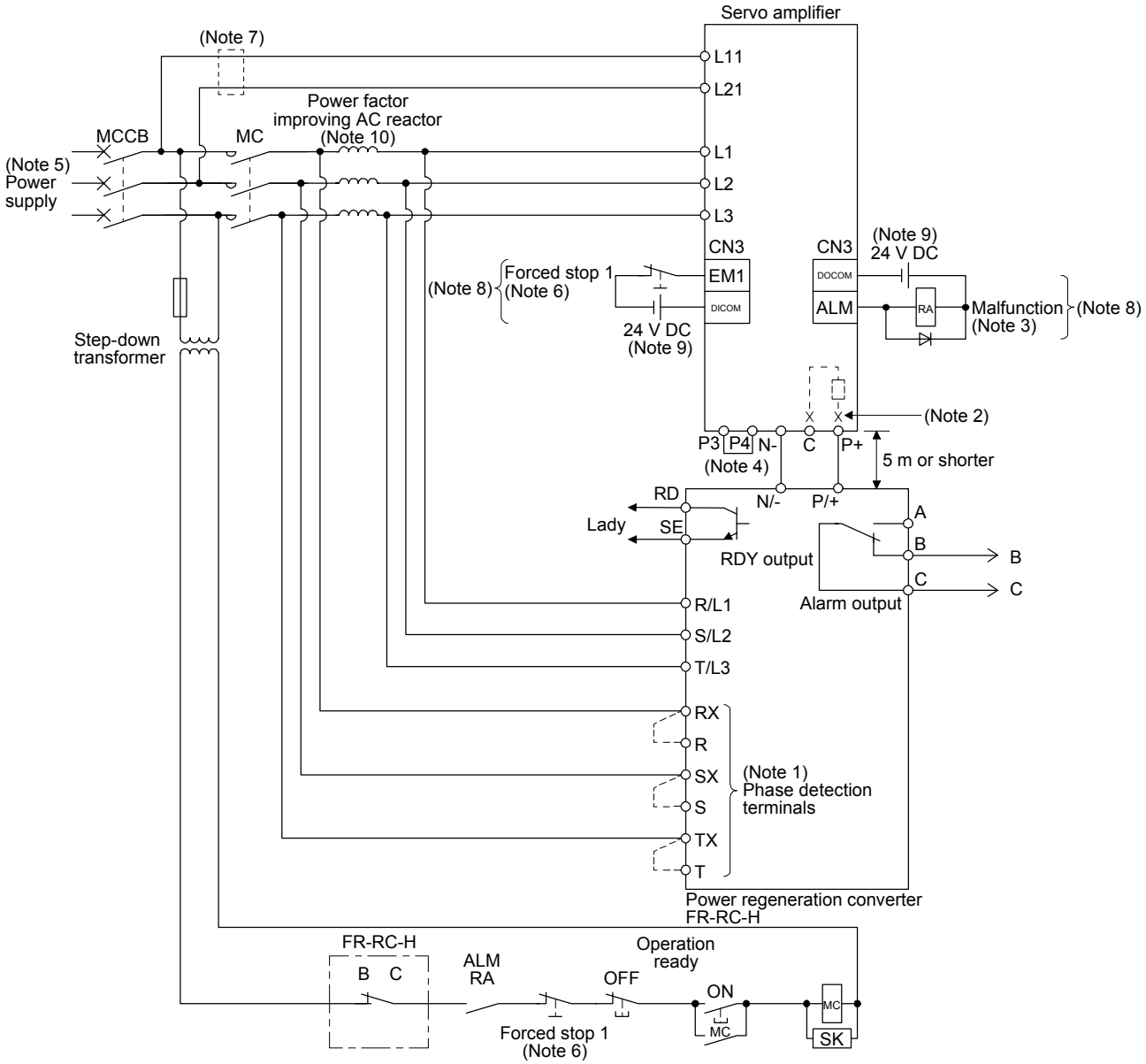

Note 1. When not using the phase detection terminals, fit the jumpers across RX-R, SX-S and TX-T. If the jumpers remain removed, the FR-RC-H will not operate.
2. For the servo amplifier of 5 kW and 7 kW, always disconnect the lead wire of built-in regenerative resistor, which is connected to P+ and C terminals. For the servo amplifier of 11 kW to 22 kW, do not connect a supplied regenerative resistor to the P+ and C terminals.
3. If disabling ALM (Malfunction) output with the parameter, configure up the power supply circuit which switches off the magnetic contactor after detection of alarm occurrence on the controller side.
4. Between P3 and P4 is connected by default. When using the power factor improving DC reactor, remove the short bar between P3 and P4. Refer to section 11.11 for details. Additionally, a power factor improving DC reactor and power factor improving AC reactor cannot be used simultaneously.
5. For the power supply specifications, refer to section 1.3.
6. Set [Pr. PA04] to "0 0 _ _" to enable EM1 (Forced stop 1). Configure up the circuit which shuts off main circuit power with external circuit at EM1 (Forced stop 1) off.
7. When wires used for L11 and L21 are thinner than wires used for L1, L2, and L3, use a molded-case circuit breaker.
8. This diagram is for sink I/O interface. For source I/O interface, refer to section 3.8.3.
9. The illustration of the 24 V DC power supply is divided between input signal and output signal for convenience. However, they can be configured by one.
10. For selection of power factor improving AC reactors, refer to "Power Regeneration Converter FR-RC Instruction Manual (IB(NA)66330)".

(3) Dimensions

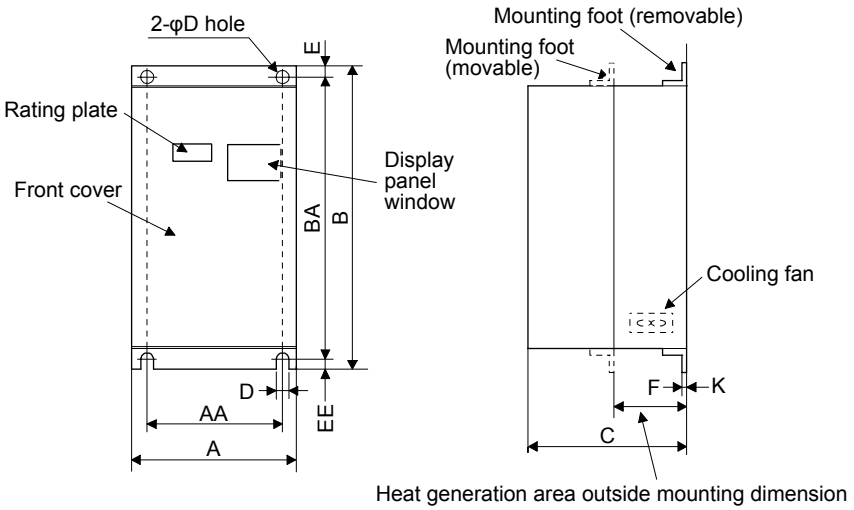

[Unit: mm]

Power regeneration converter	A	AA	B	BA	C	D	E	EE	K	F	Approximate mass [kg]
FR-RC-15K	270	200	450	432	195	10	10	8	3.2	87	19
FR-RC-30K	340	270	600	582	195	10	10	8	3.2	90	31
FR-RC-55K	480	410	700	670	250	12	15	15	3.2	135	55
FR-RC-H15K	340	270	600	582	195	10	10	8	3.2	90	31
FR-RC-H30K											
FR-RC-H55K	480	410	700	670	250	12	15	15	3.2	135	55

(4) Mounting hole machining dimensions

When the power regeneration converter is installed to an enclosed type cabinet, mount the heat generating area of the converter outside the box to provide heat generation measures. At this time, the mounting hole having the following dimensions is machined in the box.

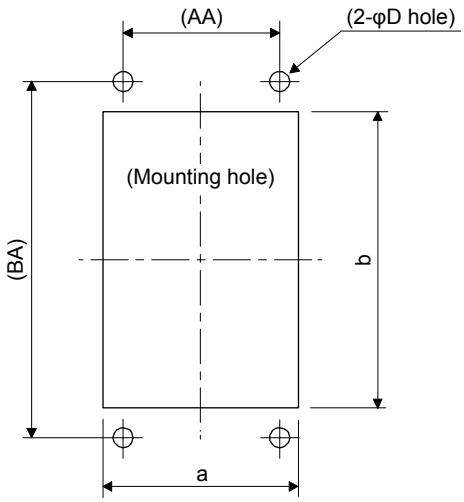

[Unit: mm]

Power regeneration converter	a	b	D	AA	BA
FR-RC-15K	260	412	10	200	432
FR-RC-30K	330	562	10	270	582
FR-RC-55K	470	642	12	410	670
FR-RC-H15K	330	562	10	270	582
FR-RC-H30K					
FR-RC-H55K	470	642	12	410	670

11.5 FR-CV-(H) power regeneration common converter

POINT

- For details of the power regeneration common converter FR-CV-(H), refer to the FR-CV Installation Guide (IB(NA)0600075).
- Do not supply power to the main circuit power supply terminals (L1, L2, and L3) of the servo amplifier. Doing so will fail the servo amplifier and FR-CV-(H).
- Connect the DC power supply between the FR-CV-(H) and servo amplifier with correct polarity. Connection with incorrect polarity will fail the FR-CV-(H) and servo amplifier.
- Two or more FR-CV-(H)s cannot be installed to improve regeneration capability. Two or more FR-CV-(H)s cannot be connected to the same DC power supply line.
- When using FR-CV-(H), set [Pr. PA04] to "0 0 _ _" to enable EM1 (Forced stop 1).

When using the FR-CV-(H) power regeneration common converter, set [Pr. PA02] to "_ _ 0 1" and set [Pr. PC20] to "_ _ _ 1".

11.5.1 Model designation

The following describes what each block of a model name indicates. Not all combinations of the symbols are available.

FR－CV－H7.5K

Capacity

Symbol	Capacity [kW]
7.5K	7.5
11K	11
15K	15
22K	22
30K	30
37K	37
55K	55

Symbol	Voltage class
None	200 V class
H	400 V class

11.5.2 Selection

(1) 200 V class

FR-CV power regeneration common converter can be used for the 200 V class servo amplifier of 100 W to 22 kW. The following shows the restrictions on using the FR-CV.

(a) Up to six servo amplifiers can be connected to one FR-CV.

(b) FR-CV capacity [W] ≥ Total of rated capacities [W] × 2 of servo amplifiers connected to FR-CV

(c) The total of used servo motor rated currents should be equal to or less than the applicable current [A] of the FR-CV.

(d) Among the servo amplifiers connected to the FR-CV, the servo amplifier of the maximum capacity should be equal to or less than the maximum connectable capacity [W].

The following table lists the restrictions.

Item	FR-CV-_						
	7.5K	11K	15K	22K	30K	37K	55K
Maximum number of connected servo amplifiers	6						
Total of connectable servo amplifier capacities [kW]	3.75	5.5	7.5	11	15	18.5	27.5
Total of connectable servo motor rated currents [A]	33	46	61	90	115	145	215
Maximum servo amplifier capacity [kW]	3.5	5	7	11	15	15	22

When using the FR-CV, always install the dedicated stand-alone reactor (FR-CVL).

Power regeneration common converter	Dedicated stand-alone reactor
FR-CV-7.5K(-AT)	FR-CVL-7.5K
FR-CV-11K(-AT)	FR-CVL-11K
FR-CV-15K(-AT)	FR-CVL-15K
FR-CV-22K(-AT)	FR-CVL-22K
FR-CV-30K(-AT)	FR-CVL-30K
FR-CV-37K	FR-CVL-37K
FR-CV-55K	FR-CVL-55K

(2) 400 V class

FR-CV-H power regeneration common converter can be used for the servo amplifier of 11 kW to 22 kW. The following shows the restrictions on using the FR-CV-H.

(a) Up to two servo amplifiers can be connected to one FR-CV-H.

(b) FR-CV-H capacity [W] ≥ Total of rated capacities [W] × 2 of servo amplifiers connected to FR-CV-H.

(c) The total of used servo motor rated currents should be equal to or less than the applicable current [A] of the FR-CV-H.

(d) Among the servo amplifiers connected to the FR-CV-H, the servo amplifier of the maximum capacity should be equal to or less than the maximum connectable capacity [W].

The following table lists the restrictions.

Item	FR-CV-H_			
	22K	30K	37K	55K
Maximum number of connected servo amplifiers	1			2
Total of connectable servo amplifier capacities [kW]	11	15	18.5	27.5
Total of connectable servo motor rated currents [A]	43	57	71	110
Maximum servo amplifier capacity [kW]	11	15	15	22

When using the FR-CV-H, always install the dedicated stand-alone reactor (FR-CVL-H).

Power regeneration common converter	Dedicated stand-alone reactor
FR-CV-H22K(-AT)	FR-CVL-H22K
FR-CV-H30K(-AT)	FR-CVL-H30K
FR-CV-H37K	FR-CVL-H37K
FR-CV-H55K	FR-CVL-H55K

(3) Connection diagram

POINT
●In this configuration, only the STO function is supported. The forced stop deceleration function is not available.

(a) 200 V class

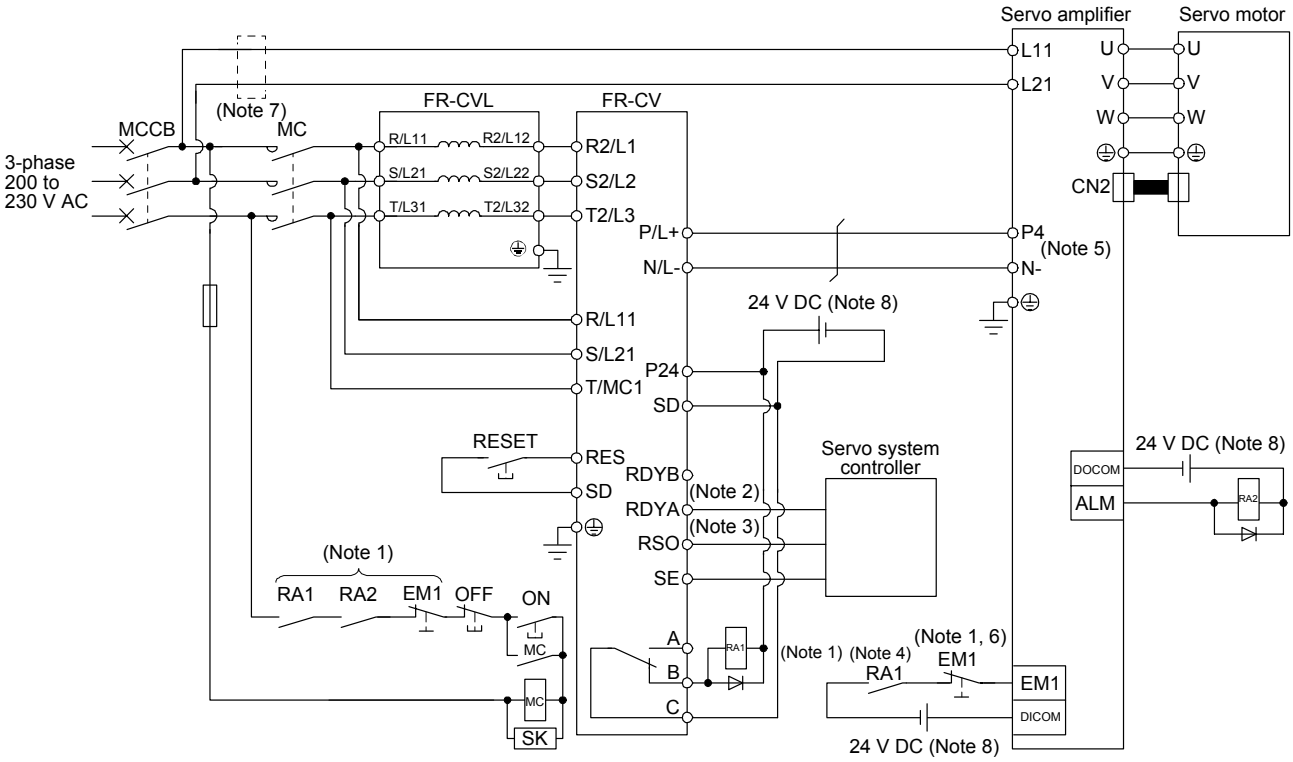

Note 1. Configure a sequence that will shut off main circuit power in the following.
- An alarm occurred at FR-CV or servo amplifier.
- EM1 (Forced stop 1) is enabled.

2. For the servo amplifier, configure a sequence that will switch the servo-on after the FR-CV is ready.
3. For the FR-CV, the RSO signal turns off when it is put in a ready-to-operate status where the reset signal is input. Configure a sequence that will make the servo inoperative when the RSO signal is on.
4. Configure a sequence that will make a stop with the emergency stop input of the servo system controller if an alarm occurs in the FR-CV. When the servo system controller does not have an emergency stop input, use the forced stop input of the servo amplifier to make a stop as shown in the diagram.
5. When using FR-CV, always disconnect wiring between P3 and P4 terminals.
6. Set [Pr. PA04] to "0 0 _ _" to enable EM1 (Forced stop 1).
7. When wires used for L11 and L21 are thinner than wires used for L1, L2, and L3, use a molded-case circuit breaker.
8. The illustration of the 24 V DC power supply is divided between input signal and output signal for convenience. However, they can be configured by one.

(b) 400 V class

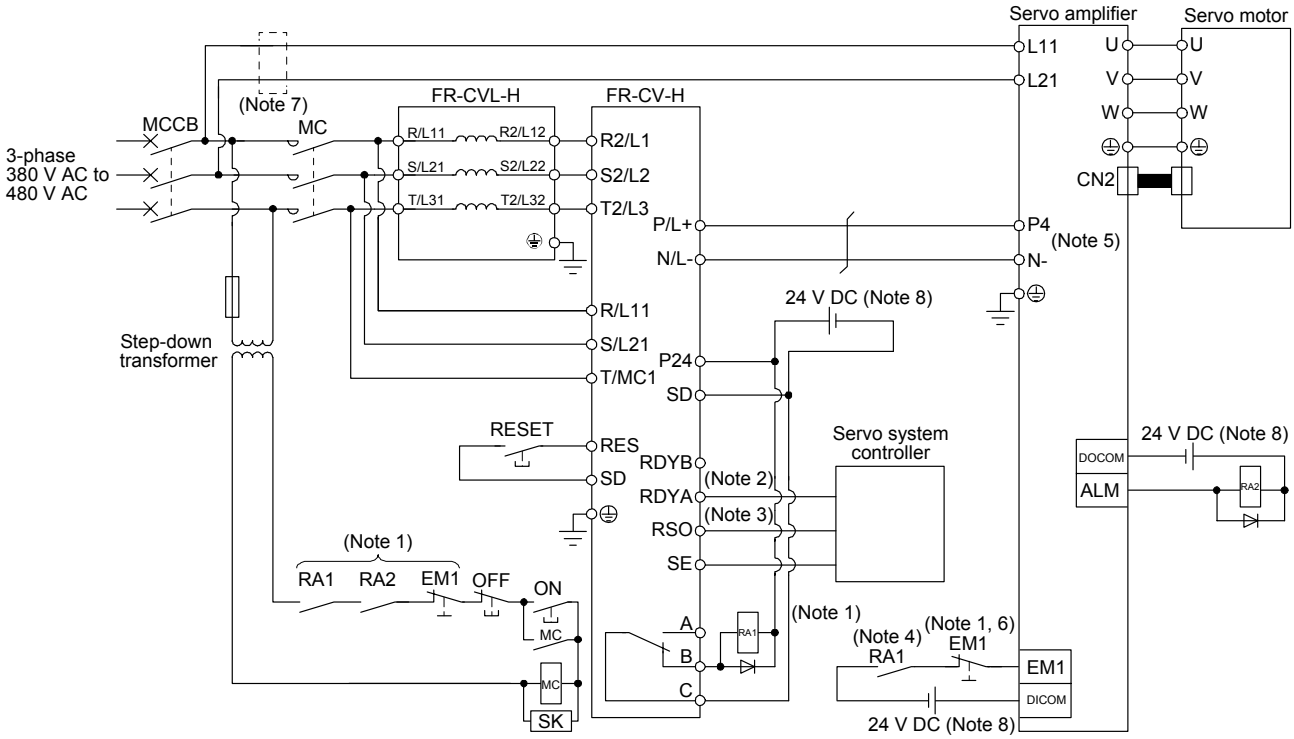

Note 1. Configure a sequence that will shut off main circuit power in the following.
- An alarm occurred at FR-CV-H or servo amplifier.
- EM1 (Forced stop 1) is enabled.

2. For the servo amplifier, configure a sequence that will switch the servo-on after the FR-CV-H is ready.
3. For the FR-CV-H, the RSO signal turns off when it is put in a ready-to-operate status where the reset signal is input. Configure a sequence that will make the servo inoperative when the RSO signal is on.
4. Configure a sequence that will make a stop with the emergency stop input of the servo system controller if an alarm occurs in the FR-CV-H. When the servo system controller does not have an emergency stop input, use the forced stop input of the servo amplifier to make a stop as shown in the diagram.
5. When using FR-CV-H, always disconnect wiring between P3 and P4 terminals.
6. Set [Pr. PA04] to "0 0 _ _" to enable EM1 (Forced stop 1).
7. When wires used for L11 and L21 are thinner than wires used for L1, L2, and L3, use a molded-case circuit breaker.
8. The illustration of the 24 V DC power supply is divided between input signal and output signal for convenience. However, they can be configured by one.

(4) Selection example of wires used for wiring

POINT

●Selection conditions of wire size is as follows.
600 V grade heat-resistant polyvinyl chloride insulated wire (HIV wire)
Construction condition: Single wire set in midair

(a) Wire size

1) Between P and P4, and between N and N-

The following table indicates the connection wire sizes of the DC power supply (P4, N- terminals) between the FR-CV and servo amplifier.

Total of servo amplifier capacities [kW]	Wire [mm^2]
1 or less	2 (AWG 14)
2	3.5 (AWG 12)
5	5.5 (AWG 10)
7	8 (AWG 8)
11	14 (AWG 6)
15	22 (AWG 4)
22	50 (AWG 2)

The following table indicates the connection wire sizes of the DC power supply (P4, N- terminals) between the FR-CV-H and servo amplifier.

Total of servo amplifier capacities [kW]	Wire [mm^2]
11	8 (AWG 8)
15	8 (AWG 8)
22	14 (AWG 6)

(2) Grounding

For grounding, use the wire of the size equal to or greater than that indicated in the following table, and make it as short as possible.

Power regeneration common converter	Grounding wire size [mm^2]
FR-CV-7.5K to FR-CV-15K	8 (AWG 8)
FR-CV-22K/FR-CV-30K	22 (AWG 4)
FR-CV-37K/FR-CV-55K	38 (AWG 2)
FR-CV-H22K/FR-CV-H30K	8 (AWG 8)
FR-CV-H37K/FR-CV-H55K	14 (AWG 6)

(b) Example of selecting the wire sizes

1) 200 V class

When connecting multiple servo amplifiers, always use junction terminals for wiring the servo amplifier terminals P4 and N-. Also, connect the servo amplifiers in the order of larger to smaller capacities.

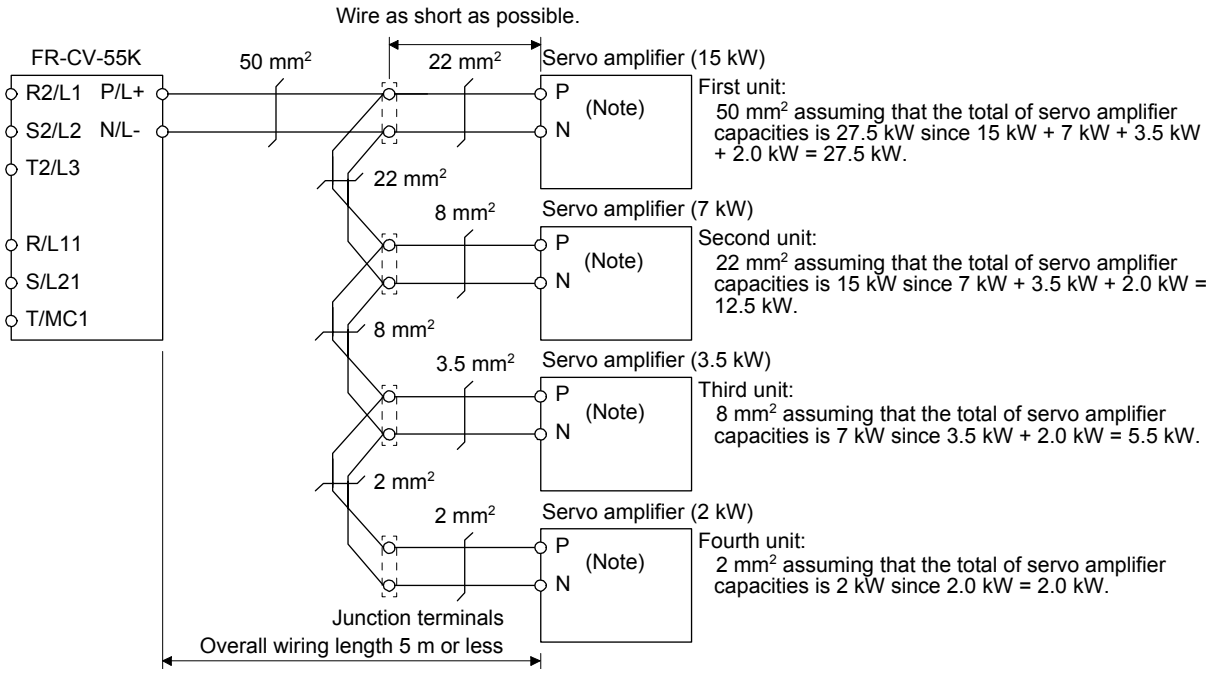

Note. When using the servo amplifier of 7 kW or less, make sure to disconnect the wiring of built-in regenerative resistor (5 kW or less: P+ and D, 7 kW: P+ and C).

2) 400 V class

When connecting two servo amplifiers of 11 kW, always use junction terminals for wiring the servo amplifier terminals P4, N-.

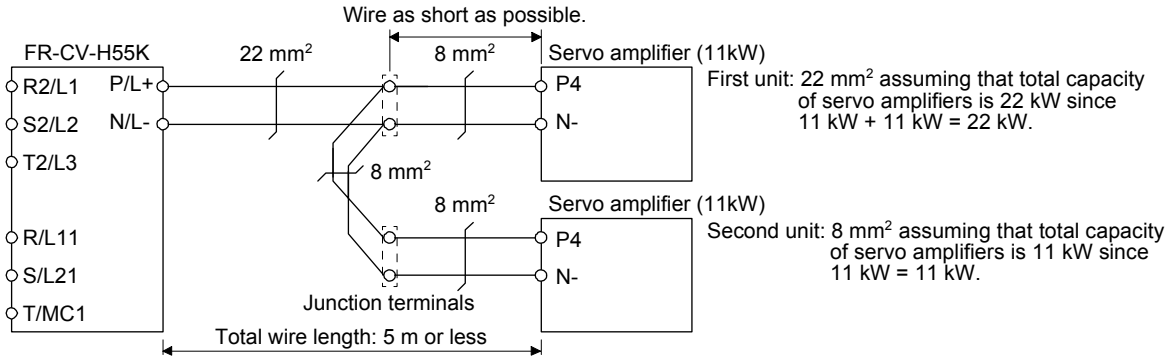

(5) Other precautions

(a) When using the FR-CV-(H), always install the dedicated stand-alone reactor (FR-CVL-(H)). Do not use the power factor improving AC reactor (FR-HAL-(H)) or power factor improving DC reactor (FR-HEL-(H)).

(b) The inputs/outputs (main circuits) of the FR-CV-(H) and servo amplifiers include high-frequency components and may provide electromagnetic wave interference to communication equipment (such as AM radios) used near them. In this case, interference can be reduced by installing the radio noise filter (FR-BIF-(H)) or line noise filter (FR-BSF01, FR-BLF).

(c) The overall wiring length for connection of the DC power supply between the FR-CV-(H) and servo amplifiers should be 5 m or less, and the wiring must be twisted.

(6) Specifications

Item \ Power regeneration common converter FR-CV-_			7.5K	11K	15K	22K	30K	37K	55K
Total of connectable servo amplifier capacities		[kW]	3.75	5.5	7.5	11	15	18.5	27.5
Maximum servo amplifier capacity		[kW]	3.5	5	7	11	15	15	22
Output	Total of connectable servo motor rated currents	[A]	33	46	61	90	115	145	215
Output	Regenerative braking torque	Short-time rating	Total capacity of applicable servo motors, 300% torque, 60 s (Note 1)						
Output	Regenerative braking torque	Continuous rating	100% torque						
Power	Rated input AC voltage/frequency		3-phase 200 V AC to 220 V AC, 50 Hz, 200 V AC to 230 V AC, 60 Hz						
Power	Permissible AC voltage fluctuation		3-phase 170 V AC to 242 V AC, 50 Hz, 170 V AC to 253 V AC, 60 Hz						
Power	Permissible frequency fluctuation		±5%						
Power	Power supply capacity (Note 2)	[kVA]	17	20	28	41	52	66	100
IP rating (JEM 1030), cooling method			Open type (IP00), forced cooling						
Environment	Ambient temperature		-10 ˚C to 50 ˚C (non-freezing)						
Environment	Ambient humidity		90 %RH or less (non-condensing)						
Environment	Ambience		Indoors (no direct sunlight), free from corrosive gas, flammable gas, oil mist, dust, and dirt						
Altitude, vibration resistance			1000 m or less above sea level, 5.9 m/s^2						
Molded-case circuit breaker or earth-leakage current breaker			30AF 30A	50AF 50A	100AF 75A	100AF 100A	125AF 125A	125AF 125A	225AF 175A
Magnetic contactor			S-N20	S-N35	S-N50	S-N65	S-N80	S-N95	S-N125

Item \ Power regeneration common converter FR-CV-H_			22K	30K	37K	55K
Total of connectable servo amplifier capacities [kW]			11	15	185	27.5
Maximum servo amplifier capacity [kW]			11	15	15	22
Output	Total of connectable servo motor rated currents [A]		43	57	71	110
Output	Regenerative braking torque	Short-time rating	Total capacity of applicable servo motors, 300% torque, 60 s (Note 1)			
Output	Regenerative braking torque	Continuous rating	100% torque			
Power supply	Rated input AC voltage/frequency		3-phase 380 V AC to 480 V AC, 50 Hz/60 Hz			
Power supply	Permissible AC voltage fluctuation		3-phase 323 V AC to 528 V AC, 50 Hz/60 Hz			
Power supply	Permissible frequency fluctuation		±5%			
Power supply	Power supply capacity (Note 2) [kVA]		41	52	66	100
IP rating (JEM 1030), cooling method			Open type (IP00), forced cooling			
Environment	Ambient temperature		-10 ˚C to 50 ˚C (non-freezing)			
Environment	Ambient humidity		90 %RH or less (non-condensing)			
Environment	Ambience		Indoors (no direct sunlight), free from corrosive gas, flammable gas, oil mist, dust, and dirt			
Altitude, vibration resistance			1000 m or less above sea level, 5.9 m/s^2			
Molded-case circuit breaker or earth-leakage current breaker			50AF 50A	60AF 60A	100AF 75A	100AF 100A
Magnetic contactor			S-N25	S-N35	S-N50	S-N65

Note 1. This is the time when the protective function of the FR-CV-(H) is activated. The protective function of the servo amplifier is activated in the time indicated in section 10.1.

2. The specified value is the power supply capacity of FR-CV-(H). The total power supply capacities of the connected servo amplifiers are actually required.

11.6 Junction terminal block PS7DW-20V14B-F (recommended)

(1) Usage

Always use the junction terminal block (PS7W-20V14B-F(YOSHIDA ELECTRIC INDUSTRY)) with the option cable (MR-J2HBUS_M) as a set. A connection example is shown below.

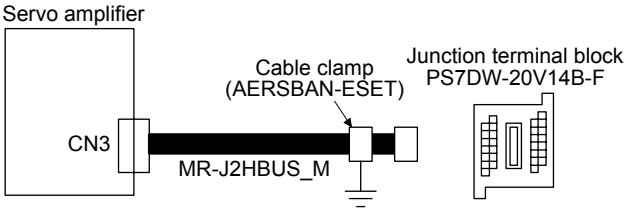

Ground the option cable on the junction terminal block side with the cable clamp fitting (AERSBAN-ESET). For the use of the cable clamp fitting, refer to section 11.14, (2) (c).

(2) Connection of MR-J2HBUS_M cable and junction terminal block

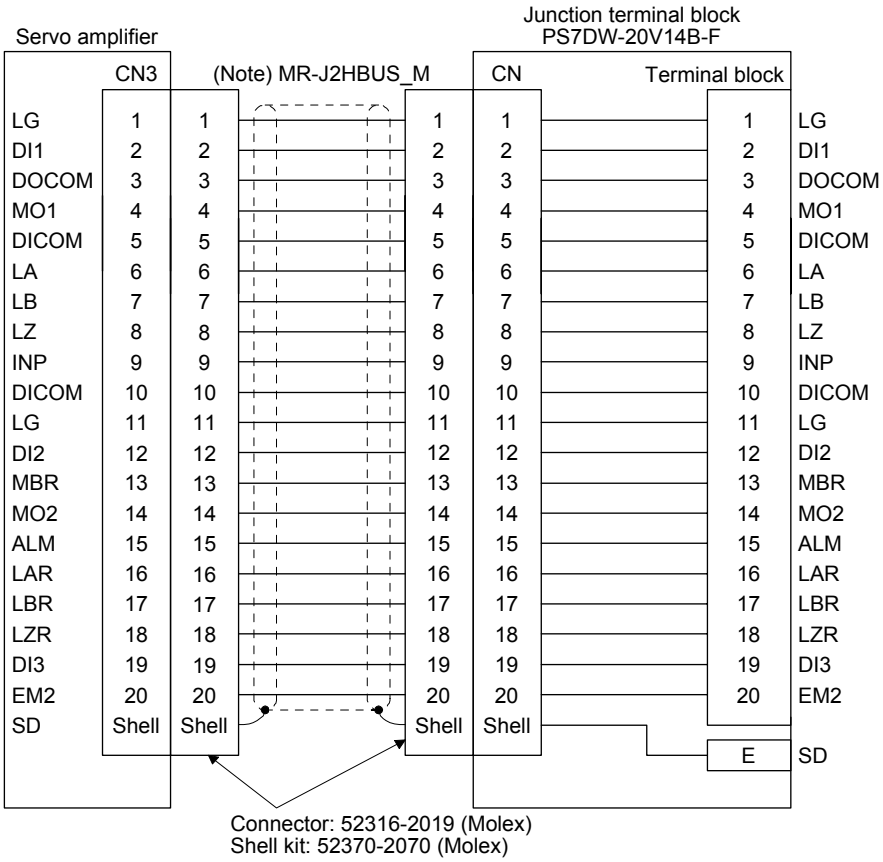

Note. Symbol indicating cable length is put in _.

05: 0.5 m

1: 1 m

5: 5 m

(3) Dimensions of junction terminal block

[Unit: mm]

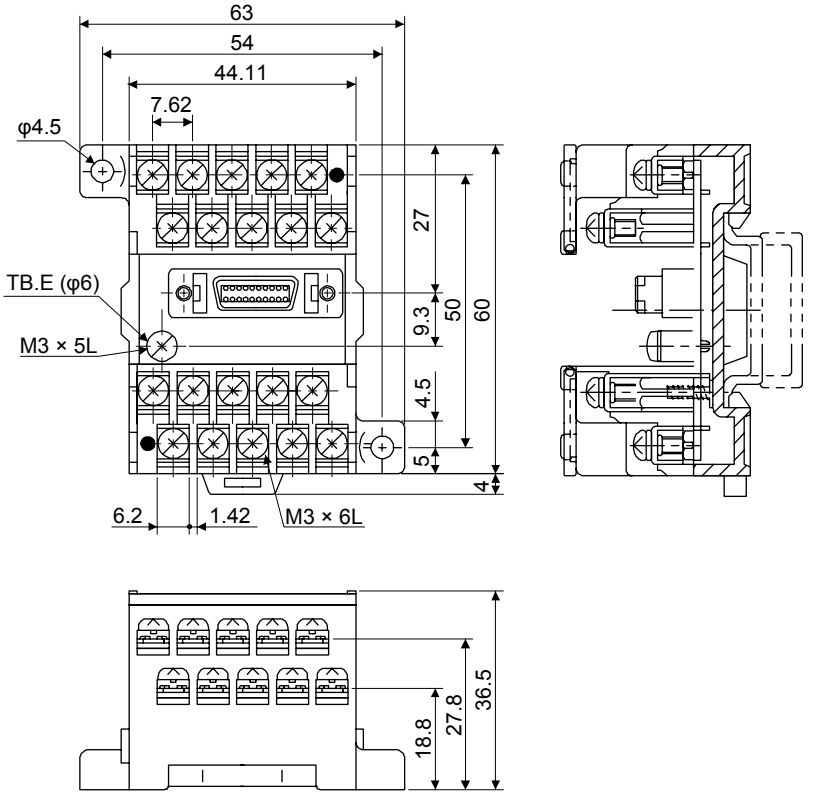

11.7 MR Configurator2

POINT
●The MR-J4-_B_-RJ servo amplifier is supported with software version 1.19V or later.

MR Configurator2 (SW1DNC-MRC2-E) uses the communication function of the servo amplifier to perform parameter setting changes, graph display, test operation, etc. on a personal computer.

11.7.1 Specifications

Item	Description
Project	Create/read/save/delete project, system setting, and print
Parameter	Parameter setting
Monitor	Display all, I/O monitor, graph, and ABS data display
Diagnosis	Alarm display, alarm onset data, drive recorder, no motor rotation, system configuration, life diagnosis, machine diagnosis, fully closed loop diagnosis (Note 2), and linear diagnosis (Note 3)
Test operation	JOG operation (Note 4), positioning operation, motor-less operation (Note 1), DO forced output, and program operation
Adjustment	One-touch tuning, tuning, and machine analyzer
Others	Servo assistant, parameter setting range update, machine unit conversion setting, and help display

Note 1. This is available only in the standard control mode. This will be available in the fully closed loop control mode, linear servo motor control mode, and DD motor control mode in the future.
2. This is available only in the fully closed loop control mode.
3. This is available only in the linear servo motor control mode.
4. This is available in the standard control mode, fully closed loop control mode, and DD motor control mode.

11.7.2 System configuration

(1) Components

To use this software, the following components are required in addition to the servo amplifier and servo motor.

Equipment		Description
(Note 1, 2, 3, 4, 5) Personal computer	OS	Microsoft® Windows® 8 Enterprise Operating System Microsoft® Windows® 8 Pro Operating System Microsoft® Windows® 8 Operating System Microsoft® Windows® 7 Enterprise Operating System Microsoft® Windows® 7 Ultimate Operating System Microsoft® Windows® 7 Professional Operating System Microsoft® Windows® 7 Home Premium Operating System Microsoft® Windows® 7 Starter Operating System Microsoft® Windows Vista® Enterprise Operating System Microsoft® Windows Vista® Ultimate Operating System Microsoft® Windows Vista® Business Operating System Microsoft® Windows Vista® Home Premium Operating System Microsoft® Windows Vista® Home Basic Operating System Microsoft® Windows® XP Professional Operating System, Service Pack2 or later Microsoft® Windows® XP Home Edition Operating System, Service Pack2 or later Microsoft® Windows® 2000 Professional Operating System, Service Pack4 or later
	CPU (recommended)	Desktop personal computer: Intel® Celeron® processor 2.8GHz or more Laptop personal computer: Intel® Pentium® M processor 1.7GHz or more
	Memory (recommended)	512 MB or more (for 32-bit OS) and 1 GB or more (for 64-bit OS)
	Hard Disk	1GB or more
	Communication interface	USB port
Browser	Windows® Internet Explorer® 4.0 or more	
Display	One whose resolution is 1024 × 768 or more and that can provide a high color (16 bit) display. Connectable with the above personal computer.	
Keyboard	Connectable with the above personal computer.	
Mouse	Connectable with the above personal computer.	
Printer	Connectable with the above personal computer.	
USB cable	MR-J3USBCBL3M	

Note 1. On some personal computers, MR Configurator2 may not run properly.

2. When Windows® XP or later is used, the following functions cannot be used.
   - Windows Program Compatibility mode
   - Fast User Switching
   - Remote Desktop
   - Large Fonts Mode (Display property)
   - DPI settings other than 96 DPI (Display property)

   For 64-bit operating system, this software is compatible with Windows® 7 and Windows® 8.

3. When Windows® 7 or later is used, the following functions cannot be used.
   - Windows XP Mode
   - Windows touch

4. When using this software with Windows Vista® or later, log in as a user having USER authority or higher.

5. When Windows® 8 is used, the following functions cannot be used.
   - Hyper-V
   - Modern UI style

(2) Connection with servo amplifier

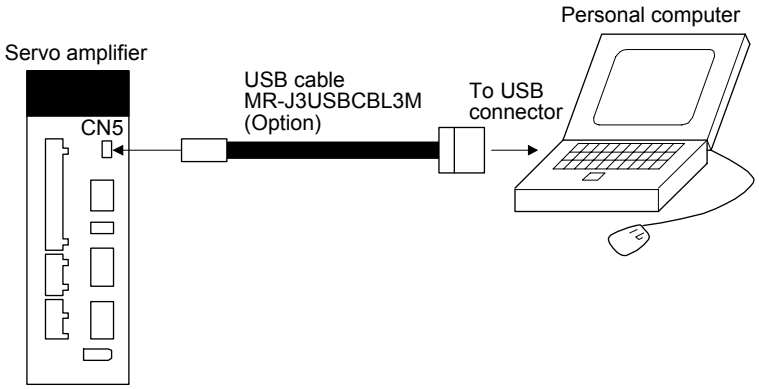

11.7.3 Precautions for using USB communication function

Note the following to prevent an electric shock and malfunction of the servo amplifier.

(1) Power connection of personal computers
Connect your personal computer with the following procedures.

(a) When you use a personal computer with AC power supply
1) When using a personal computer with a three-core power plug or power plug with grounding wire, use a three-pin socket or ground the grounding wire.

2) When your personal computer has two-core plug and has no grounding wire, connect the personal computer to the servo amplifier with the following procedures.

a) Disconnect the power plug of the personal computer from an AC power socket.

b) Check that the power plug was disconnected and connect the device to the servo amplifier.

c) Connect the power plug of the personal computer to the AC power socket.

(b) When you use a personal computer with battery
You can use as it is.

(2) Connection with other devices using servo amplifier communication function
When the servo amplifier is charged with electricity due to connection with a personal computer and the charged servo amplifier is connected with other devices, the servo amplifier or the connected devices may malfunction. Connect the servo amplifier and other devices with the following procedures.

(a) Shut off the power of the device for connecting with the servo amplifier.

(b) Shut off the power of the servo amplifier which was connected with the personal computer and check the charge lamp is off.

(c) Connect the device with the servo amplifier.

(d) Turn on the power of the servo amplifier and the device.

11.8 Battery

POINT
●Refer to appendix 2 and 3 for battery transportation and the new EU Battery Directive. ●The MR-BAT6V1BJ battery for junction battery cable is only for the HG series servo motors. It cannot be used with direct drive motors. ●Do not use the MR-BAT6V1BJ battery for junction battery cable in the fully closed loop system and scale measurement function.

This battery is used to construct an absolute position detection system. Refer to chapter 12 for details.

11.8.1 MR-BAT6V1SET battery

(1) Parts identification

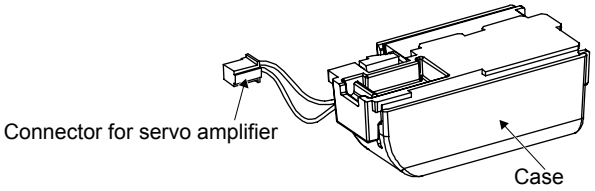

(2) Year and month of manufacture of battery
The year and month of manufacture of MR-BAT6V1 battery have been described to the rating plate put on a MR-BAT6V1 battery built-in MR-BAT6V1SET battery.

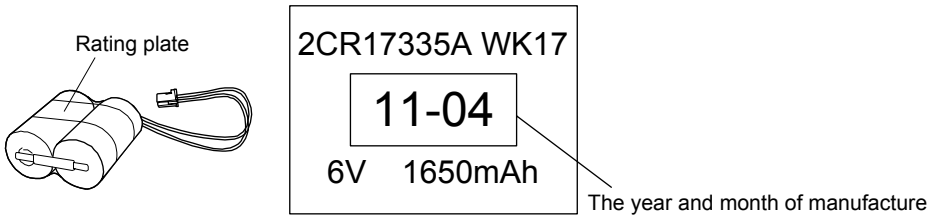

11.8.2 MR-BAT6V1BJ battery for junction battery cable

(1) Parts identification

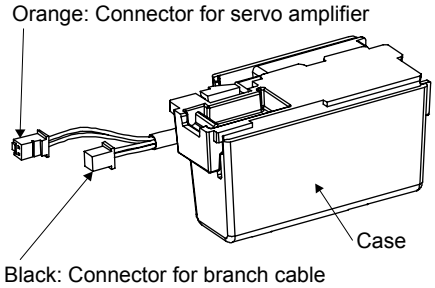

(2) Year and month of manufacture of battery
Production year and month are indicated in a serial number (SERIAL) on the rating plate. The second digit from left in the number indicates the first digit of the dominical year, The third digit from left indicates a month (Oct: X, Nov: Y, Dec.: Z). For November 2013, the serial is like, "SERIAL: _ 3Y _ _ _ _ _ _".

(3) DIMENSIONS

[Unit: mm]

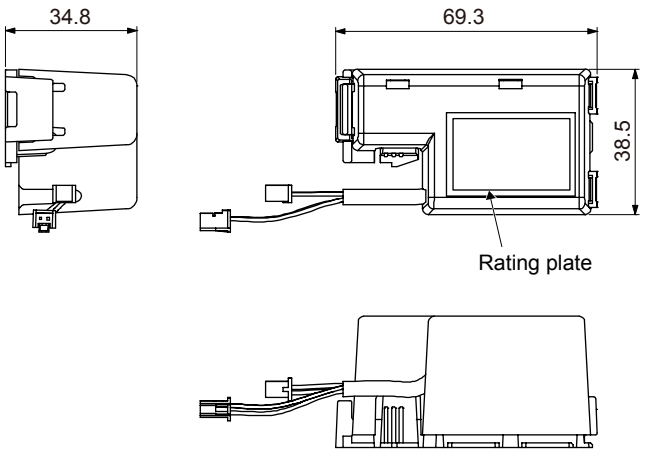

Mass: 66 [g]

11.9 Selection example of wires

POINT
●Refer to section 11.1.3 for SSCNET III cable. ●To comply with the IEC/EN/UL/CSA standard, use the wires shown in appendix 4 for wiring. To comply with other standards, use a wire that is complied with each standard. ●Selection conditions of wire size is as follows. Construction condition: Single wire set in midair Wire length: 30 m or less

The following diagram shows the wires used for wiring. Use the wires given in this section or equivalent.

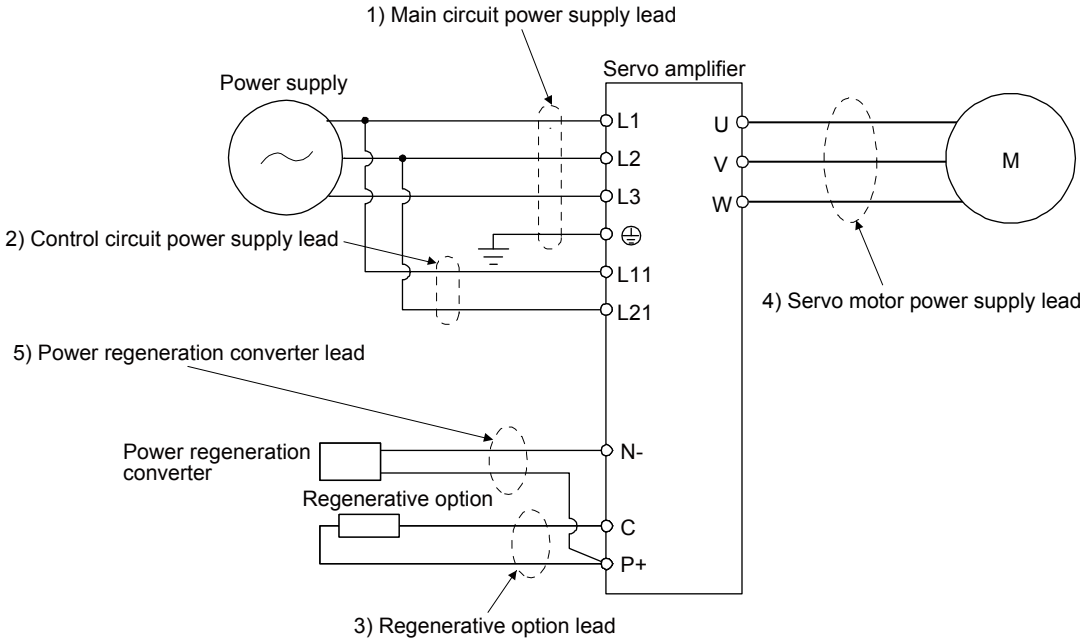

(1) Example of selecting the wire sizes

Use the 600 V Grade heat-resistant polyvinyl chloride insulated wire (HIV wire) for wiring. The following shows the wire size selection example.

(a) 200 V class

Table 11.1 Wire size selection example (HIV wire)

<table>
<tr><th rowspan="2">Servo amplifier</th><th colspan="4">Wire [mm^2] (Note 1)</th></tr>
<tr><th>1) L1/L2/L3/⏚</th><th>2) L11/L21</th><th>3) P+/C</th><th>4) U/V/W/⏚ (Note 3)</th></tr>
<tr><td>MR-J4-10B(-RJ)</td><td rowspan="7">2 (AWG 14)</td><td rowspan="8">1.25 to 2
(AWG 16 to 14)
(Note 4)</td><td rowspan="8">2 (AWG 14)</td><td rowspan="6">AWG 18 to 14
(Note 4)</td></tr>
<tr><td>MR-J4-20B(-RJ)</td></tr>
<tr><td>MR-J4-40B(-RJ)</td></tr>
<tr><td>MR-J4-60B(-RJ)</td></tr>
<tr><td>MR-J4-70B(-RJ)</td></tr>
<tr><td>MR-J4-100B(-RJ)</td></tr>
<tr><td>MR-J4-200B(-RJ)</td><td rowspan="2">AWG 16 to 10</td></tr>
<tr><td>MR-J4-350B(-RJ)</td><td>3.5 (AWG 12)</td></tr>
<tr><td>MR-J4-500B(-RJ)
(Note 2)</td><td>5.5 (AWG 10): a</td><td rowspan="2">1.25 (AWG 16): a
2 (AWG 14): d
(Note 4)</td><td rowspan="2">2 (AWG 14): c</td><td>2 (AWG 14): c
3.5 (AWG 12): a
5.5 (AWG 10): a</td></tr>
<tr><td>MR-J4-700B(-RJ)
(Note 2)</td><td>8 (AWG 8): b</td><td>2 (AWG 14): c
3.5 (AWG 12): a
5.5 (AWG 10): a
8 (AWG 8): b</td></tr>
<tr><td>MR-J4-11KB(-RJ)
(Note 2)</td><td>14 (AWG 6): f</td><td rowspan="3">1.25 (AWG 16): c
2 (AWG 14): c</td><td>3.5 (AWG 12): g</td><td>14 (AWG 6): f
(Note 5) 5.5
(AWG 10): g
8 (AWG 8): k</td></tr>
<tr><td>MR-J4-15KB(-RJ)
(Note 2)</td><td>22 (AWG 4): h</td><td>5.5 (AWG 10): g</td><td>22 (AWG 4): h
(Note 5) 8 (AWG 8): k</td></tr>
<tr><td>MR-J4-22KB(-RJ)
(Note 2)</td><td>38 (AWG 2): i</td><td>5.5 (AWG 10): j</td><td>38 (AWG 2): i</td></tr>
</table>

Note 1. Alphabets in the table indicate crimping tools. For crimp terminals and applicable tools, refer to (2) in this section.
2. To connect these models to a terminal block, be sure to use the screws that come with the terminal block.
3. The wire size shows applicable size of the servo amplifier connector and terminal block. For wires connecting to the servo motor, refer to each servo amplifier instruction manual.
4. Be sure to use the size of 2 mm^2 when corresponding to IEC/EN/UL/CSA standard.
5. This is for connecting to the linear servo motor with natural cooling method.

Use wires (5)) of the following sizes with the power regeneration converter (FR-RC).

Model	Wire [mm^2]
FR-RC-15K	14 (AWG 6)
FR-RC-30K	14 (AWG 6)
FR-RC-55K	22 (AWG 4)

(b) 400 V class

Table 11.2 Wire size selection example (HIV wire)

Servo amplifier	Wires [mm^2] (Note 1)			
	1) L1/L2/L3/⏚	2) L11/L21	3) P+/C	4) U/V/W/⏚ (Note 3)
MR-J4-60B4(-RJ)/ MR-J4-100B4(-RJ)	2 (AWG 14)	1.25 to 2 (AWG 16 to 14) (Note 4)	2 (AWG14)	AWG 16 to 14
MR-J4-200B4(-RJ)				
MR-J4-350B4(-RJ)				
MR-J4-500B4(-RJ) (Note 2)	2 (AWG 14): b	1.25 (AWG 16): a 2 (AWG 14): c (Note 4)	2 (AWG14): b	3.5 (AWG 12): a
MR-J4-700B4(-RJ) (Note 2)	3.5 (AWG 12): a			5.5 (AWG 10): a
MR-J4-11KB4(-RJ) (Note 2)	5.5 (AWG 10): d	1.25 (AWG 16): b 2 (AWG 14): b (Note 4)	2 (AWG14): f	8 (AWG 8): g
MR-J4-15KB4(-RJ) (Note 2)	8 (AWG 8): g		3.5 (AWG 12): d	
MR-J4-22KB4(-RJ) (Note 2)	14 (AWG 6): i		3.5 (AWG 12): e	5.5 (AWG 10): e (Note 5) 8 (AWG 8):h (Note 6) 14 (AWG 6): i

Note 1. Alphabets in the table indicate crimping tools. For crimp terminals and applicable tools, refer to (2) in this section.
2. To connect these models to a terminal block, be sure to use the screws that come with the terminal block.
3. The wire size shows applicable size of the servo amplifier connector and terminal block. For wires connecting to the servo motor, refer to each servo amplifier instruction manual.
4. Be sure to use the size of 2 mm^2 when corresponding to IEC/EN/UL/CSA standard.
5. This is for connecting to the linear servo motor with natural cooling method.
6. This is for connecting to the linear servo motor with liquid cooling method.

Use wires (5)) of the following sizes with the power regeneration converter (FR-RC-H).

Model	Wire [mm^2]
FR-RC-H15K	14 (AWG6)
FR-RC-H30K	
FR-RC-H55K	

(c) 100 V class

Table 11.3 Wire size selection example (HIV wire)

Servo amplifier	Wires [mm^2]			
	1) L1/L2/⏚	2) L11/L21	3) P+/C	4) U/V/W/⏚ (Note 1)
MR-J4-10B1(-RJ)	2 (AWG 14)	1.25 to 2 (AWG 16 to 14) (Note 2)	2 (AWG 14)	AWG 18 to 14 (Note 2)
MR-J4-20B1(-RJ)				
MR-J4-40B1(-RJ)				

Note 1. The wire size shows applicable size of the servo amplifier connector and terminal block. For wires connecting to the servo motor, refer to each servo amplifier instruction manual.
2. Be sure to use the size of 2 mm^2 when corresponding to IEC/EN/UL/CSA standard.

(2) Selection example of crimp terminals

(a) 200 V class

Symbol	Servo amplifier-side crimp terminals				
	(Note 2) Crimp terminal	Applicable tool			Manufacturer
		Body	Head	Dice	
a	FVD5.5-4	YNT-1210S			JST
b (Note 1)	8-4NS	YHT-8S			
c	FVD2-4	YNT-1614			
d	FVD2-M3				
e	FVD1.25-M3	YNT-2216			
f	FVD14-6	YF-1	YNE-38	DH-122 DH-112	
g	FVD5.5-6	YNT-1210S			
h	FVD22-6	YF-1	YNE-38	DH-123 DH-113	
i	FVD38-8	YF-1	YNE-38	DH-124 DH-114	
j	FVD5.5-8	YNT-1210S			
k	FVD8-6	YF-1/E-4	YNE-38	DH-121 DH-111	

Note 1. Coat the crimping part with an insulation tube.
2. Some crimp terminals may not be mounted depending on the size. Make sure to use the recommended ones or equivalent ones.

(b) 400 V class

Symbol	Servo amplifier-side crimp terminals				Manufacturer
	Crimp terminal (Note)	Applicable tool			
		Body	Head	Dice	
a	FVD5.5-4	YNT-1210S			JST
b	FVD2-4	YNT-1614			
c	FVD2-M3				
d	FVD5.5-6	YNT-1210S			
e	FVD5.5-8	YNT-1210S			
f	FVD2-6	YNT-1614			
g	FVD8-6	YF-1	YNE-38	DH-121/DH-111	
h	FVD8-8				
i	FVD14-8			DH-122/DH-112	

Note. Some crimp terminals may not be mounted depending on the size. Make sure to use the recommended ones or equivalent ones.

11.10 Molded-case circuit breakers, fuses, magnetic contactors (recommended)

(1) For main circuit power supply

Always use one molded-case circuit breaker and one magnetic contactor with one servo amplifier. When using a fuse instead of the molded-case circuit breaker, use the one having the specifications given in this section.

Servo amplifier	Molded-case circuit breaker (Note 1)			Fuse			Magnetic contactor (Note 2)
	Frame, rated current		Voltage AC [V]	Class	Current [A]	Voltage AC [V]	
	Power factor improving reactor is not used	Power factor improving reactor is used					
MR-J4-10B(-RJ)	30 A frame 5 A	30 A frame 5 A	240	T	10	300	S-N10 S-T10
MR-J4-20B(-RJ)	30 A frame 5 A	30 A frame 5 A					
MR-J4-40B(-RJ)	30 A frame 10 A	30 A frame 5 A			15		
MR-J4-60B(-RJ)	30 A frame 15 A	30 A frame 10 A			20		
MR-J4-70B(-RJ)	30 A frame 15 A	30 A frame 10 A					
MR-J4-100B(-RJ)	30 A frame 15 A	30 A frame 10 A					
MR-J4-200B(-RJ)	30 A frame 20 A	30 A frame 20 A			40		S-N20 (Note 3) S-T21
MR-J4-350B(-RJ)	30 A frame 30 A	30 A frame 30 A			70		S-N20 S-T21
MR-J4-500B(-RJ)	50 A frame 50 A	50 A frame 50 A			125		S-N35
MR-J4-700B(-RJ)	100 A frame 75 A	60 A frame 60 A			150		S-N50
MR-J4-11KB(-RJ)	100 A frame 100 A	100 A frame 100 A			200		
MR-J4-15KB(-RJ)	125 A frame 125 A	125 A frame 125 A			250		S-N65
MR-J4-22KB(-RJ)	225 A frame 175 A	225 A frame 175 A			350		S-N95
MR-J4-60B4(-RJ)	30 A frame 5 A	30 A frame 5 A	480	T	10	600	S-N10 S-T10
MR-J4-100B4(-RJ)	30 A frame 10 A	30 A frame 5 A			15		
MR-J4-200B4(-RJ)	30 A frame 15 A	30 A frame 10 A			25		
MR-J4-350B4(-RJ)	30 A frame 20 A	30 A frame 15 A			35		S-N20 (Note 3) S-T21
MR-J4-500B4(-RJ)	30 A frame 20 A	30 A frame 20 A			50		
MR-J4-700B4(-RJ)	30 A frame 30 A	30 A frame 30 A			65		S-N20 S-T21
MR-J4-11KB4(-RJ)	50 A frame 50 A	50 A frame 50 A			100		S-N25
MR-J4-15KB4(-RJ)	60 A frame 60 A	60 A frame 60 A			150		S-N35
MR-J4-22KB4(-RJ)	100 A frame 100 A	100 A frame 100 A			175		S-N50
MR-J4-10B1(-RJ)	30 A frame 5 A	30 A frame 5 A	240	T	10	300	S-N10 S-T10
MR-J4-20B1(-RJ)	30 A frame 10 A	30 A frame 10 A			15		
MR-J4-40B1(-RJ)	30 A frame 15 A	30 A frame 10 A			20		

Note 1. When having the servo amplifier comply with the IEC/EN/UL/CSA standard, refer to appendix 4.
2. Use a magnetic contactor with an operation delay time (interval between current being applied to the coil until closure of contacts) of 80 ms or less.
3. S-N18 can be used when auxiliary contact is not required.

(2) For control circuit power supply

When the wiring for the control circuit power supply (L11, L21) is thinner than that for the main circuit power supply (L1, L2, L3), install an overcurrent protection device (molded-case circuit breaker or fuse) to protect the branch circuit.

Servo amplifier	Molded-case circuit breaker (Note)		Fuse (Class T)		Fuse (Class K5)	
	Frame, rated current	Voltage AC [V]	Current [A]	Voltage AC [V]	Current [A]	Voltage AC [V]
MR-J4-10B(-RJ)	30 A frame 5 A	240	1	300	1	250
MR-J4-20B(-RJ)						
MR-J4-40B(-RJ)						
MR-J4-60B(-RJ)						
MR-J4-70B(-RJ)						
MR-J4-100B(-RJ)						
MR-J4-200B(-RJ)						
MR-J4-350B(-RJ)						
MR-J4-500B(-RJ)						
MR-J4-700B(-RJ)						
MR-J4-11KB(-RJ)						
MR-J4-15KB(-RJ)						
MR-J4-22KB(-RJ)						
MR-J4-60B4(-RJ)	30 A frame 5 A	480	1	600	1	600
MR-J4-100B4(-RJ)						
MR-J4-200B4(-RJ)						
MR-J4-350B4(-RJ)						
MR-J4-500B4(-RJ)						
MR-J4-700B4(-RJ)						
MR-J4-11KB4(-RJ)						
MR-J4-15KB4(-RJ)						
MR-J4-22KB4(-RJ)						
MR-J4-10B1(-RJ)	30 A frame 5 A	240	1	300	1	250
MR-J4-20B1(-RJ)						
MR-J4-40B1(-RJ)						

Note. When having the servo amplifier comply with the IEC/EN/UL/CSA standard, refer to appendix 4.

11.11 Power factor improving DC reactors

The following shows the advantages of using power factor improving DC reactor.

- It improves the power factor by increasing the form factor of the servo amplifier's input current.
- It decreases the power supply capacity.
- The input power factor is improved to about 85%.
- As compared to the power factor improving AC reactor (FR-HAL-(H)), it decreases the loss.

When connecting the power factor improving DC reactor to the servo amplifier, always disconnect P3 and P4. If it remains connected, the effect of the power factor improving DC reactor is not produced.
When used, the power factor improving DC reactor generates heat. To release heat, therefore, leave a 10 cm or more clearance at each of the top and bottom, and a 5 cm or more clearance on each side.

(1) 200 V class

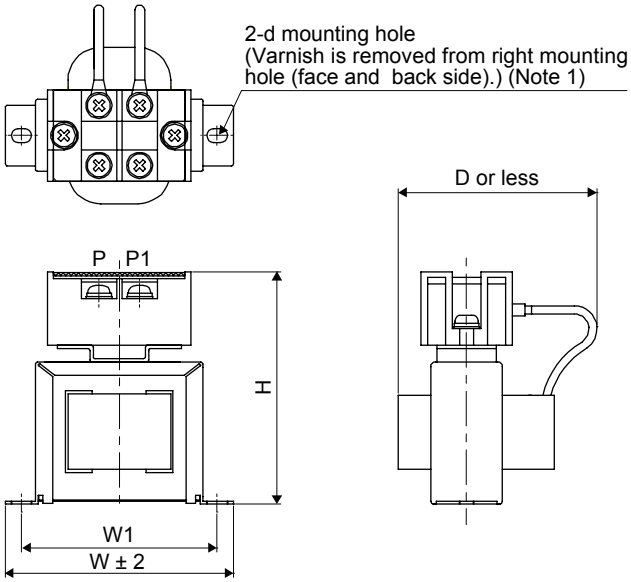

Fig. 11.1

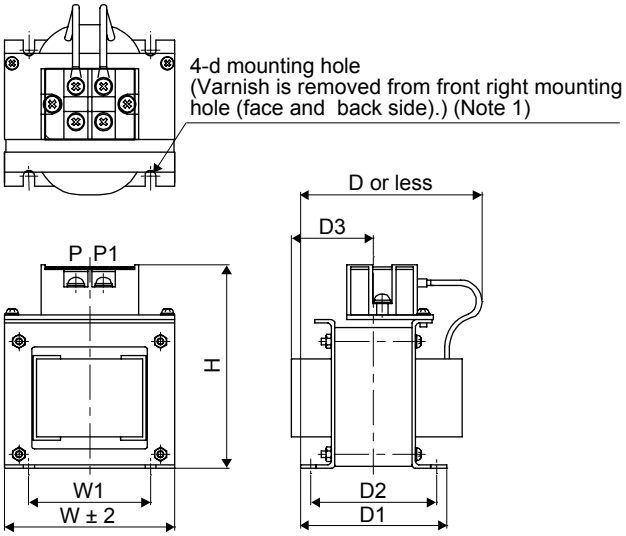

Fig. 11.2

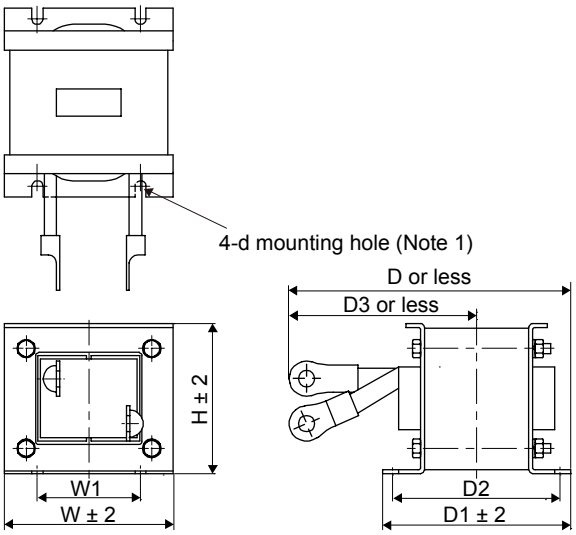

Fig. 11.3

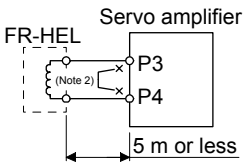

Note 1. Use this for grounding.
2. When using the power factor improving DC reactor, remove the short bar across P3 and P4.

Servo amplifier	Power factor improving DC reactor	Dimensions	Dimensions [mm]								Terminal size	Mass [kg]	Wire [mm^2] (Note 2)
			W	W1	H	D (Note 1)	D1	D2	D3	d			
MR-J4-10B(-RJ) MR-J4-20B(-RJ)	FR-HEL-0.4K	Fig. 11.1	70	60	71	61		21		M4	M4	0.4	2 (AWG 14)
MR-J4-40B(-RJ)	FR-HEL-0.75K		85	74	81	61		21		M4	M4	0.5	
MR-J4-60B(-RJ) MR-J4-70B(-RJ)	FR-HEL-1.5K		85	74	81	70		30		M4	M4	0.8	
MR-J4-100B(-RJ)	FR-HEL-2.2K		85	74	81	70		30		M4	M4	0.9	
MR-J4-200B(-RJ)	FR-HEL-3.7K	Fig. 11.2	77	55	92	82	66	57	37	M4	M4	1.5	
MR-J4-350B(-RJ)	FR-HEL-7.5K		86	60	113	98	81	72	43	M4	M5	2.5	3.5 (AWG 12)
MR-J4-500B(-RJ)	FR-HEL-11K		105	64	133	112	92	79	47	M6	M6	3.3	5.5 (AWG 10)
MR-J4-700B(-RJ)	FR-HEL-15K		105	64	133	115	97	84	48.5	M6	M6	4.1	8 (AWG 8)
MR-J4-11KB(-RJ)	FR-HEL-15K		105	64	133	115	97	84	48.5	M6	M6	4.1	14 (AWG 6)
MR-J4-15KB(-RJ)	FR-HEL-22K		105	64	93	175	117	104	115 (Note 1)	M6	M10	5.6	22 (AWG 4)
MR-J4-22KB(-RJ)	FR-HEL-30K	Fig. 11.3	114	72	100	200	125	101	135 (Note 1)	M6	M10	7.8	38 (AWG 2)

Note 1. Maximum dimensions The dimension varies depending on the input/output lines.
2. Selection conditions of wire size is as follows.
600 V grade heat-resistant polyvinyl chloride insulated wire (HIV wire)
Construction condition: Single wire set in midair

(2) 400 V class

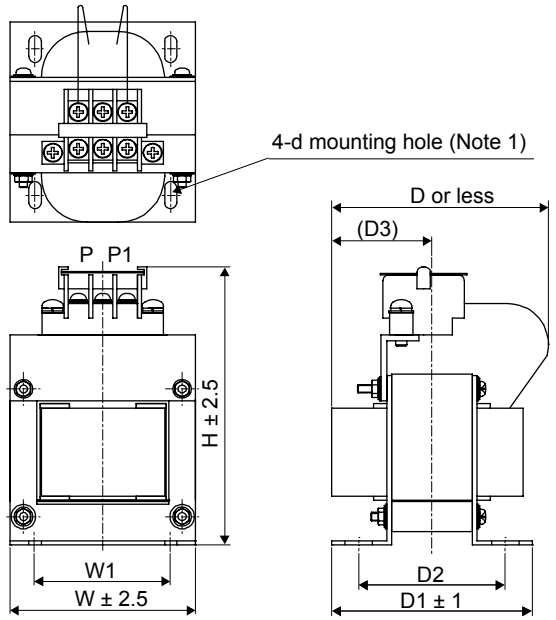

Fig. 11.4

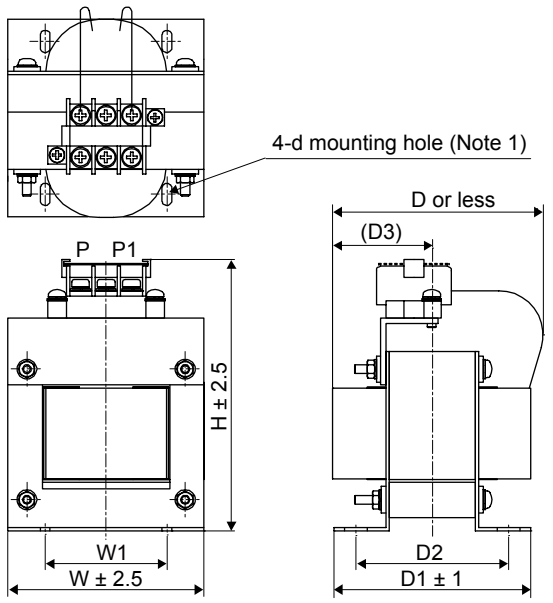

Fig. 11.5

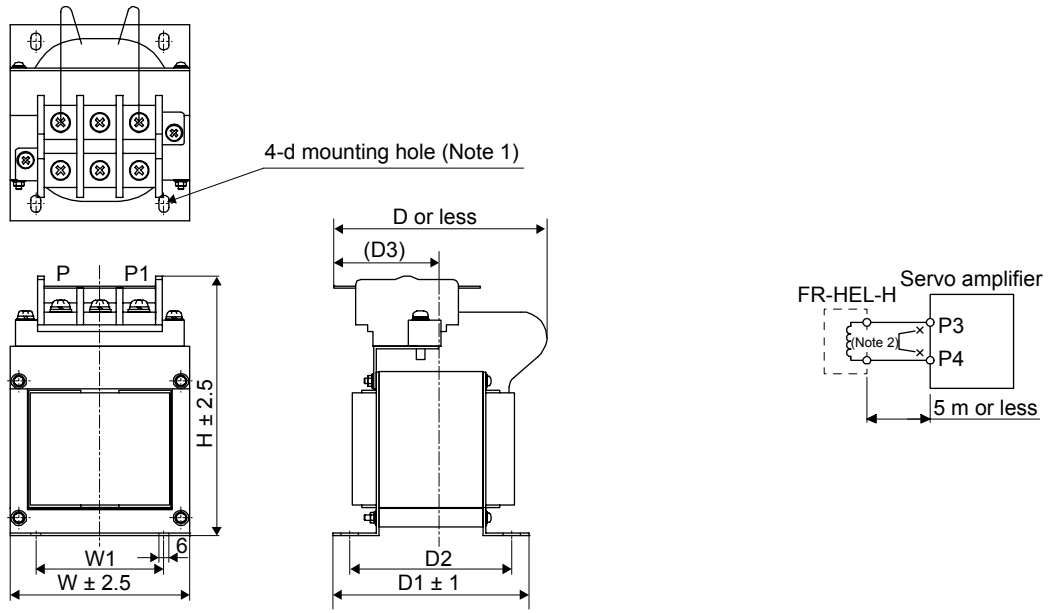

Fig. 11.6

Note 1. Use this for grounding.
2. When using the power factor improving DC reactor, remove the short bar across P3 and P4.

Servo amplifier	Power factor improving DC reactor	Dimensions	Dimensions [mm]								Terminal size	Mass [kg]	Wire [mm^2] (Note)
			W	W1	H	D	D1	D2	D3	d			
MR-J4-60B4(-RJ)	FR-HEL-H1.5K	Fig. 11.4	66	50	100	80	74	54	37	M4	M3.5	1.0	2 (AWG 14)
MR-J4-100B4(-RJ)	FR-HEL-H2.2K		76	50	110	80	74	54	37	M4	M3.5	1.3	2 (AWG 14)
MR-J4-200B4(-RJ)	FR-HEL-H3.7K	Fig. 11.5	86	55	120	95	89	69	45	M4	M4	2.3	2 (AWG 14)
MR-J4-350B4(-RJ)	FR-HEL-H7.5K		96	60	128	105	100	80	50	M5	M4	3.5	2 (AWG 14)
MR-J4-500B4(-RJ)	FR-HEL-H11K		105	75	137	110	105	85	53	M5	M5	4.5	3.5 (AWG 12)
MR-J4-700B4(-RJ)	FR-HEL-H15K	Fig. 11.6	105	75	152	125	115	95	62	M5	M6	5.0	5.5 (AWG 10)
MR-J4-11KB4(-RJ)													8 (AWG 8)
MR-J4-15KB4(-RJ)	FR-HEL-H22K		133	90	178	120	95	75	53	M5	M6	6.0	8 (AWG 8)
MR-J4-22KB4(-RJ)	FR-HEL-H30K		133	90	178	120	100	80	56	M5	M6	6.5	14 (AWG 6)

Note. Selection conditions of wire size is as follows.
Wire type: 600 V grade heat-resistant polyvinyl chloride insulated wire (HIV wire)
Construction condition: Single wire set in midair

11.12 Power factor improving AC reactors

The following shows the advantages of using power factor improving AC reactor.
・It improves the power factor by increasing the form factor of the servo amplifier's input current.
・It decreases the power supply capacity.
・The input power factor is improved to about 80%.
When using power factor improving reactors for two servo amplifiers or more, be sure to connect a power factor improving reactor to each servo amplifier. If using only one power factor improving reactor, enough improvement effect of phase factor cannot be obtained unless all servo amplifiers are operated.

(1) 200 V class/100 V class

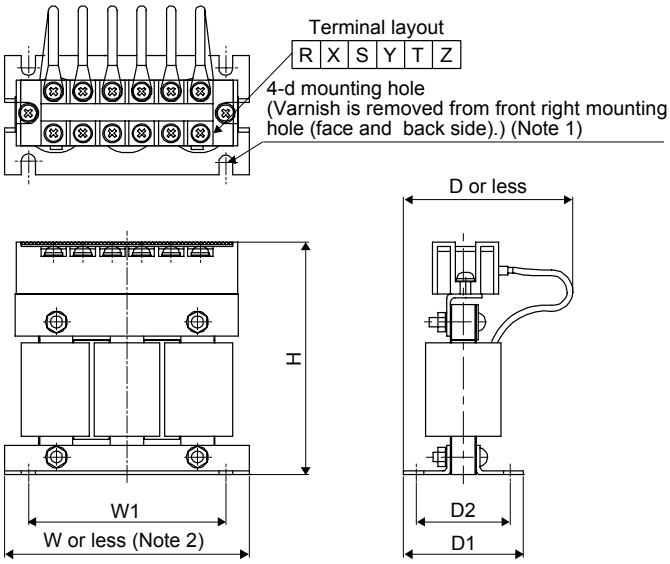

Fig. 11.7

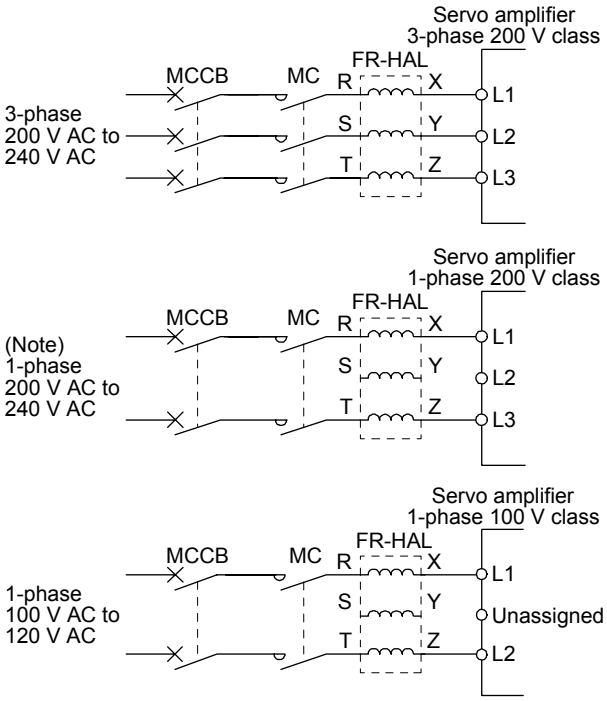

Note 1. Use this for grounding.
2. W ± 2 is applicable for FR-HAL-0.4K to FR-HAL-1.5K.

Note. For 1-phase 200 V AC to 240 V AC, connect the power supply to L1 and L3. Leave L2 open.

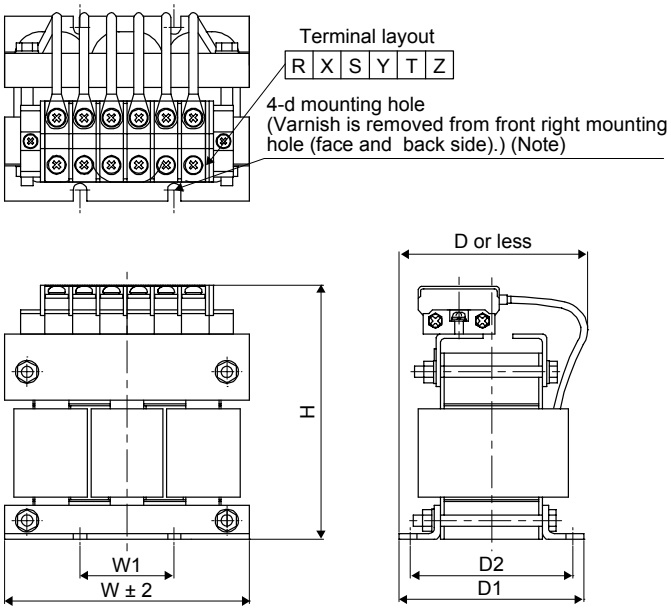

Fig. 11.8

Note. Use this for grounding.

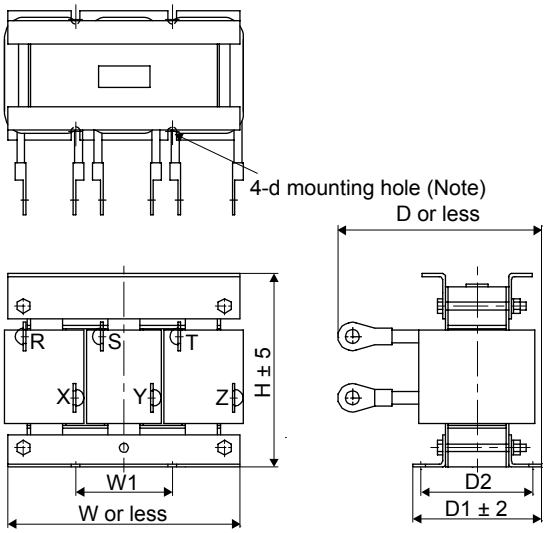

Fig. 11.9

Note. Use this for grounding.

Servo amplifier	Power factor improving AC reactor	Dimensions	Dimensions [mm]							Terminal size	Mass [kg]
			W	W1	H	D (Note)	D1	D2	d		
MR-J4-10B(-RJ) MR-J4-20B(-RJ) MR-J4-10B1(-RJ)	FR-HAL-0.4K	Fig. 11.7	104	84	99	72	51	40	M5	M4	0.6
MR-J4-40B(-RJ) MR-J4-20B1(-RJ)	FR-HAL-0.75K		104	84	99	74	56	44	M5	M4	0.8
MR-J4-60B(-RJ) MR-J4-70B(-RJ) MR-J4-40B1(-RJ)	FR-HAL-1.5K		104	84	99	77	61	50	M5	M4	1.1
MR-J4-100B(-RJ)	FR-HAL-2.2K		115 (Note)	40	115	77	71	57	M6	M4	1.5
MR-J4-200B(-RJ)	FR-HAL-3.7K		115 (Note)	40	115	83	81	67	M6	M4	2.2
MR-J4-350B(-RJ)	FR-HAL-7.5K	Fig. 11.8	130	50	135	100	98	86	M6	M5	4.2
MR-J4-500B(-RJ)	FR-HAL-11K		160	75	164	111	109	92	M6	M6	5.2
MR-J4-700B(-RJ)	FR-HAL-15K		160	75	167	126	124	107	M6	M6	7.0
MR-J4-11KB(-RJ)	FR-HAL-15K		160	75	167	126	124	107	M6	M6	7.0
MR-J4-15KB(-RJ)	FR-HAL-22K		185 (Note)	75	150	158	100	87	M6	M8	9.0
MR-J4-22KB(-RJ)	FR-HAL-30K	Fig. 11.9	185 (Note)	75	150	168	100	87	M6	M10	9.7

Note. Maximum dimensions The dimension varies depending on the input/output lines.

(2) 400 V class

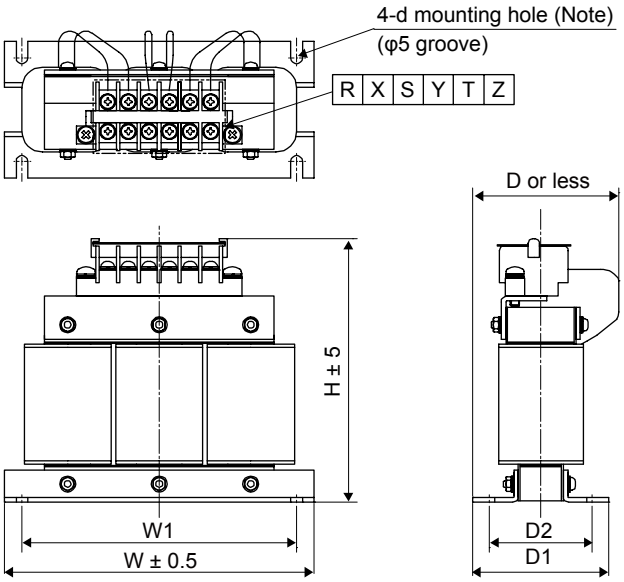

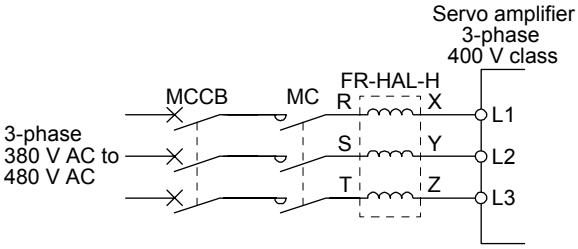

Fig. 11.10

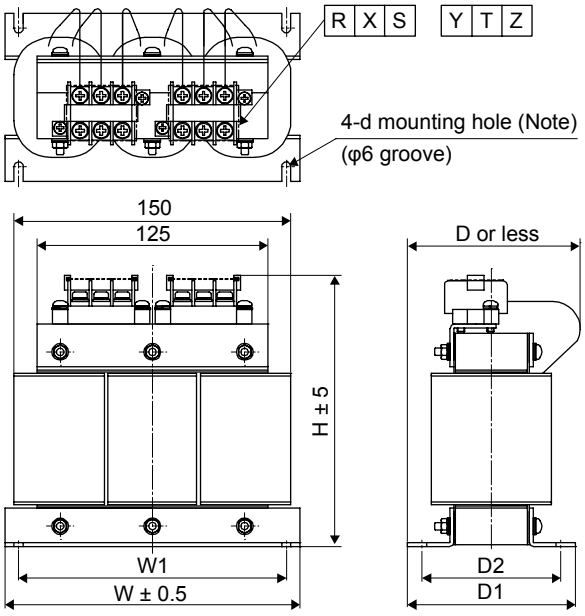

Fig. 11.11

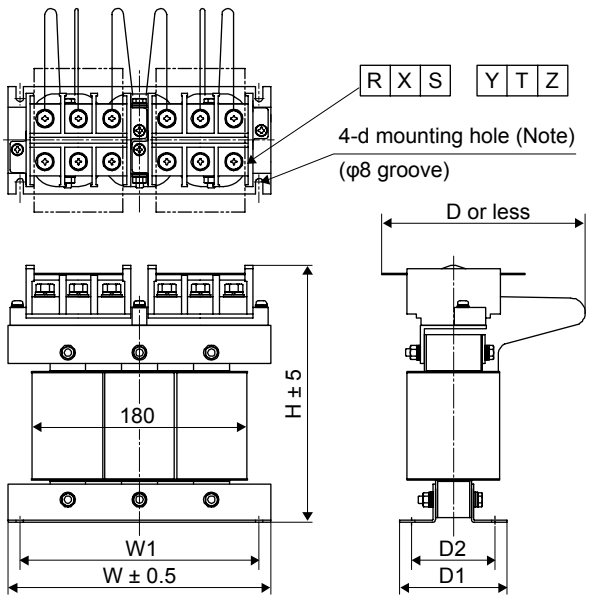

Fig. 11.12

Note. Use this for grounding.

Servo amplifier	Power factor improving AC reactor	Dimensions	Dimensions [mm]							Terminal size	Mass [kg]
			W	W1	H	D (Note)	D1	D2	d		
MR-J4-60B4(-RJ)	FR-HAL-H1.5K	Fig. 11.10	135	120	115	59	59.6	45	M4	M3.5	1.5
MR-J4-100B4(-RJ)	FR-HAL-H2.2K		135	120	115	59	59.6	45	M4	M3.5	1.5
MR-J4-200B4(-RJ)	FR-HAL-H3.7K		135	120	115	69	70.6	57	M4	M3.5	2.5
MR-J4-350B4(-RJ)	FR-HAL-H7.5K	Fig. 11.11	160	145	142	91	91	75	M4	M4	5.0
MR-J4-500B4(-RJ)	FR-HAL-H11K		160	145	146	91	91	75	M4	M5	6.0
MR-J4-700B4(-RJ) MR-J4-11KB4(-RJ)	FR-HAL-H15K		220	200	195	105	90	70	M5	M5	9.0
MR-J4-15KB4(-RJ)	FR-HAL-H22K	Fig. 11.12	220	200	215	170	90	70	M5	M8	9.5
MR-J4-22KB4(-RJ)	FR-HAL-H30K		220	200	215	170	96	75	M5	M8	11

Note. Maximum dimensions. The dimension varies depending on the input/output lines.

11.13 Relay (recommended)

The following relays should be used with the interfaces

Interface	Selection example
Digital input (interface DI-1) Relay used for digital input command signals	To prevent defective contacts, use a relay for small signal (twin contacts). (Ex.) Omron : type G2A, MY
Digital output (interface DO-1) Relay used for digital output signals	Small relay with 12 V DC or 24 V DC of rated current 40 mA or less (Ex.) Omron : type MY

11.14 Noise reduction techniques

Noises are classified into external noises which enter the servo amplifier to cause it to malfunction and those radiated by the servo amplifier to cause peripheral equipment to malfunction. Since the servo amplifier is an electronic device which handles small signals, the following general noise reduction techniques are required. Also, the servo amplifier can be a source of noise as its outputs are chopped by high carrier frequencies. If peripheral equipment malfunction due to noises produced by the servo amplifier, noise suppression measures must be taken. The measures will vary slightly with the routes of noise transmission.

(1) Noise reduction techniques

(a) General reduction techniques

- Avoid bundling power lines (input/output) and signal cables together or running them in parallel to each other. Separate the power lines from the signal cables.
- Use a shielded twisted pair cable for connection with the encoder and for control signal transmission, and connect the external conductor of the cable to the SD terminal.
- Ground the servo amplifier, servo motor, etc. together at one point. (Refer to section 3.11.)

(b) Reduction techniques for external noises that cause the servo amplifier to malfunction

If there are noise sources (such as a magnetic contactor, an electromagnetic brake, and many relays which make a large amount of noise) near the servo amplifier and the servo amplifier may malfunction, the following countermeasures are required.

- Provide surge absorbers on the noise sources to suppress noises.
- Attach data line filters to the signal cables.
- Ground the shields of the encoder connecting cable and the control signal cables with cable clamp fittings.
- Although a surge absorber is built into the servo amplifier, to protect the servo amplifier and other equipment against large exogenous noise and lightning surge, attaching a varistor to the power input section of the equipment is recommended.

(c) Techniques for noises radiated by the servo amplifier that cause peripheral equipment to malfunction

Noises produced by the servo amplifier are classified into those radiated from the cables connected to the servo amplifier and its main circuits (input and output circuits), those induced electromagnetically or statically by the signal cables of the peripheral equipment located near the main circuit cables, and those transmitted through the power supply cables.

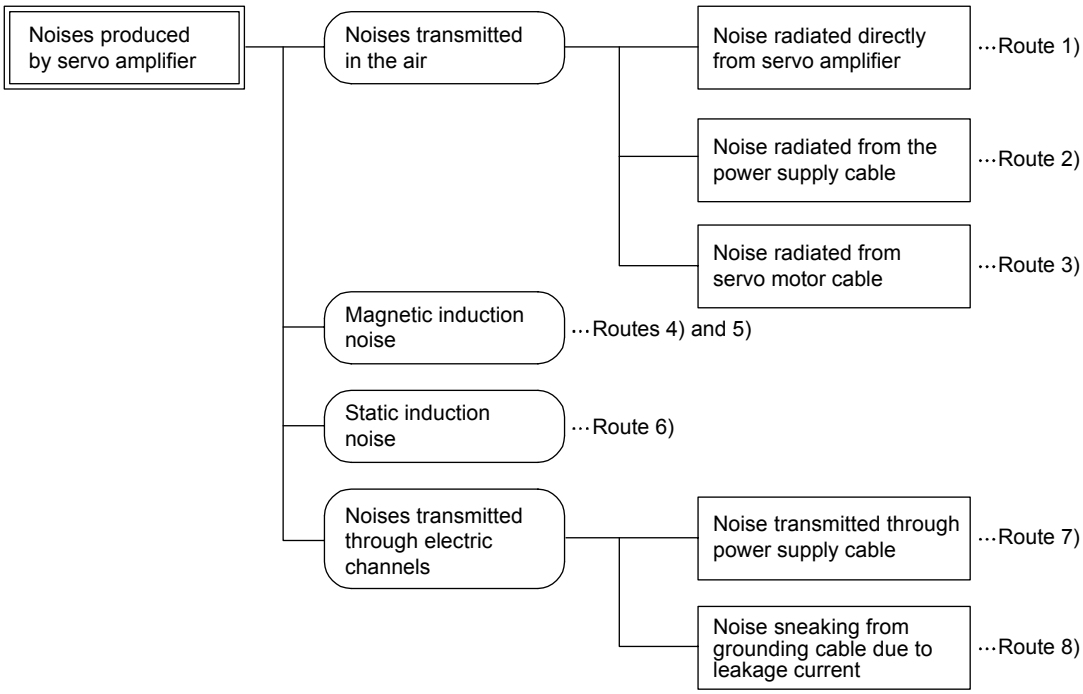

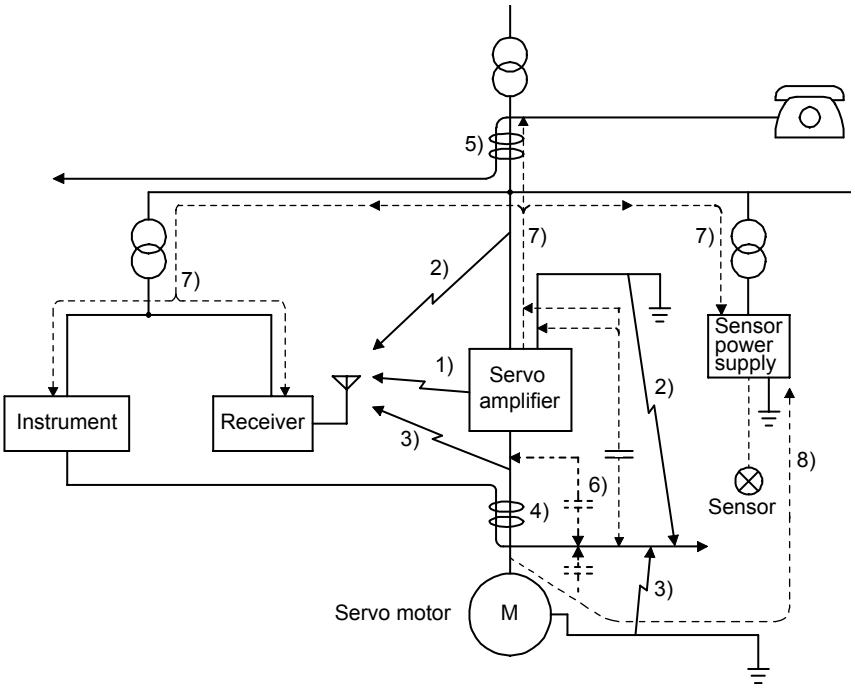

Noise transmission route	Suppression techniques
1) 2) 3)	When measuring instruments, receivers, sensors, etc. which handle weak signals and may malfunction due to noise and/or their signal cables are contained in a cabinet together with the servo amplifier or run near the servo amplifier, such devices may malfunction due to noises transmitted through the air. The following techniques are required. 1. Provide maximum clearance between easily affected devices and the servo amplifier. 2. Provide maximum clearance between easily affected signal cables and the I/O cables of the servo amplifier. 3. Avoid wiring the power lines (input/output lines of the servo amplifier) and signal lines side by side or bundling them together. 4. Insert a line noise filter to the I/O cables or a radio noise filter on the input line. 5. Use shielded wires for the signal and power lines, or put the lines in separate metal conduits.
4) 5) 6)	When the power lines and the signal lines are laid side by side or bundled together, magnetic induction noise and static induction noise will be transmitted through the signal cables and malfunction may occur. The following techniques are required. 1. Provide maximum clearance between easily affected devices and the servo amplifier. 2. Provide maximum clearance between easily affected signal cables and the I/O cables of the servo amplifier. 3. Avoid wiring the power lines (input/output lines of the servo amplifier) and signal lines side by side or bundling them together. 4. Use shielded wires for the signal and power lines, or put the lines in separate metal conduits.
7)	When the power supply of peripheral equipment is connected to the power supply of the servo amplifier system, noises produced by the servo amplifier may be transmitted back through the power supply cable and the devices may malfunction. The following techniques are required. 1. Install the radio noise filter (FR-BIF-(H)) on the power lines (Input lines) of the servo amplifier. 2. Install the line noise filter (FR-BSF01/FR-BLF) on the power lines of the servo amplifier.
8)	When the cables of peripheral equipment are connected to the servo amplifier to make a closed loop circuit, leakage current may flow to malfunction the peripheral equipment. If so, malfunction may be prevented by disconnecting the grounding cable of the peripheral device.

(2) Noise reduction techniques

(a) Data line filter (recommended)

Noise can be prevented by installing a data line filter onto the encoder cable, etc.
For example, ZCAT3035-1330 by TDK, ESD-SR-250 by NEC TOKIN, GRFC-13 by Kitagawa Industries, and E04SRM563218 by SEIWA ELECTRIC are available as data line filters.
As a reference example, the impedance specifications of the ZCAT3035-1330 (TDK) are indicated below. This impedances are reference values and not guaranteed values.

Impedance [Ω]	
10 MHz to 100 MHz	100 MHz to 500 MHz
80	150

[Unit: mm]

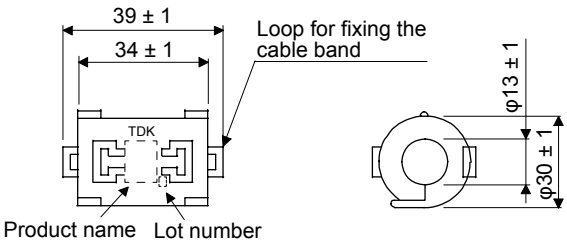

Outline drawing (ZCAT3035-1330)

(b) Surge killer (recommended)

Use of a surge killer is recommended for AC relay, magnetic contactor or the like near the servo amplifier. Use the following surge killer or equivalent.

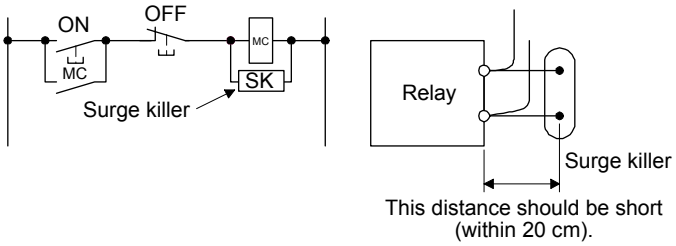

(Ex.) CR-50500 Okaya Electric Industries)

Rated voltage AC [V]	C [μF ± 20%]	R [Ω ± 30%]	Test voltage
250	0.5	50 (1/2W)	Between terminals: 625 V AC, 50 Hz/60 Hz 60 s Between terminal and case: 2000 V AC 50/60 Hz 60 s

Dimensions [Unit: mm]

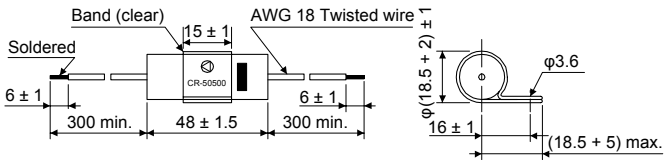

Note that a diode should be installed to a DC relay or the like.
Maximum voltage: Not less than four times the drive voltage of the relay or the like.
Maximum current: Not less than twice the drive current of the relay or the like.

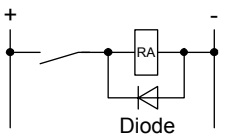

(c) Cable clamp fitting AERSBAN-_SET

Generally, the grounding of the shielded wire may only be connected to the connector's SD terminal. However, the effect can be increased by directly connecting the cable to an grounding plate as shown below.

Install the grounding plate near the servo amplifier for the encoder cable. Peel part of the cable sheath to expose the external conductor, and press that part against the grounding plate with the cable clamp. If the cable is thin, clamp several cables in a bunch.

The cable clamp comes as a set with the grounding plate.

[Unit: mm]

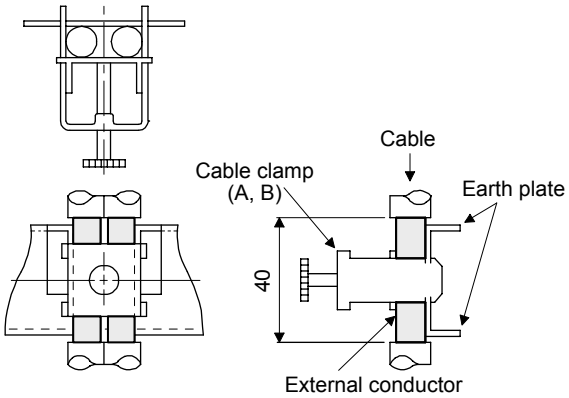

Clamp section diagram

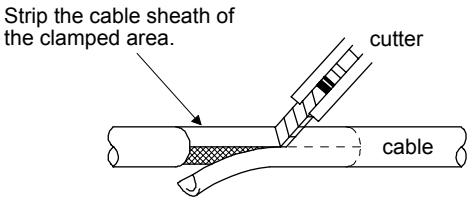

・Dimensions

[Unit: mm]

Earth plate

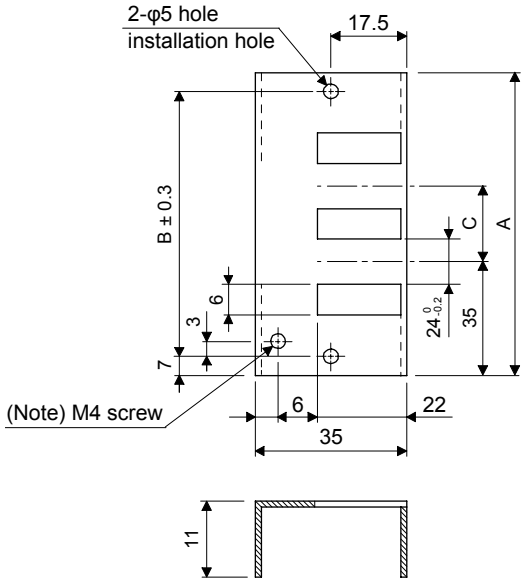

[Unit: mm]

Clamp section diagram

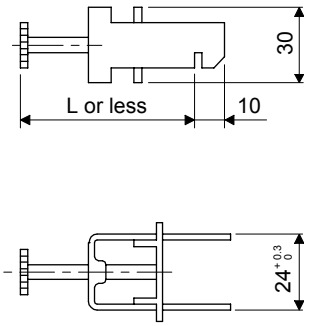

Note. Screw hole for grounding. Connect it to the grounding plate of the cabinet.

Model	A	B	C	Accessory fittings
AERSBAN-DSET	100	86	30	Clamp A: 2pcs.
AERSBAN-ESET	70	56		Clamp B: 1pc.

Clamp fitting	L
A	70
B	45

(d) Line noise filter (FR-BSF01/FR-BLF)

This filter is effective in suppressing noises radiated from the power supply side and output side of the servo amplifier and also in suppressing high-frequency leakage current (0-phase current). It especially affects the noises between 0.5 MHz and 5 MHz band.

Connection diagram	Dimensions [Unit: mm]
Use the line noise filters for lines of the main power supply (L1, L2, and L3) and of the servo motor power (U, V, and W). Pass each of the wires through the line noise filter an equal number of times in the same direction. For the main power supply, the effect of the filter rises as the number of passes increases, but generally four passes would be appropriate. For the servo motor power lines, passes must be four times or less. Do not pass the grounding wire through the filter. or the effect of the filter will drop. Wind the wires by passing through the filter to satisfy the required number of passes as shown in Example 1. If the wires are too thick to wind, use two or more filters to have the required number of passes as shown in Example 2. Place the line noise filters as close to the servo amplifier as possible for their best performance. 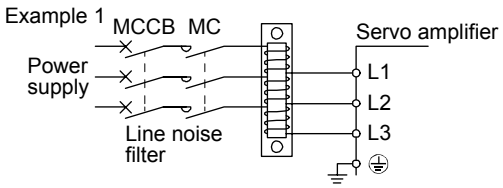 (Number of passes: 4) 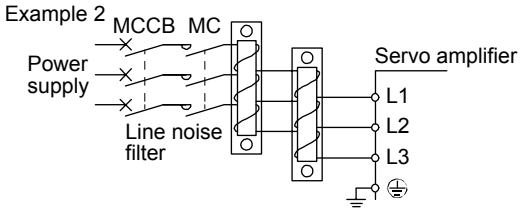 Two filters are used (Total number of passes: 4)	FR-BSF01 (for wire size 3.5 mm^2 (AWG 12) or less) 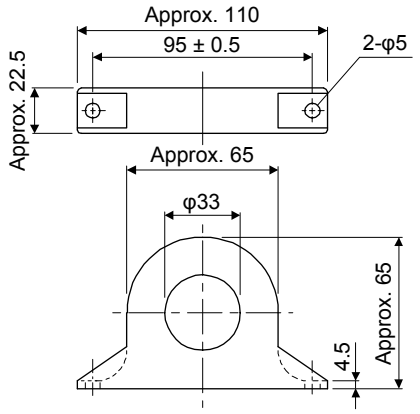 FR-BLF (for wire size 5.5 mm^2 (AWG 10) or more) 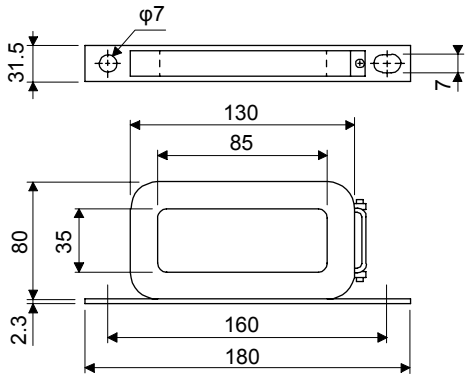

(e) Radio noise filter (FR-BIF-(H))

This filter is effective in suppressing noises radiated from the power supply side of the servo amplifier especially in 10 MHz and lower radio frequency bands. The FR-BIF is designed for the input only.

200 V class/100 V class: FR-BIF

400 V class: FR-BIF-H

Connection diagram	Dimensions [Unit: mm]
Make the connection cables as short as possible. Grounding is always required. When using the FR-BIF with a single-phase power supply, always insulate the lead wires that are not used for wiring. ・MR-J4-350B(-RJ) or less/MR-J4-350B4(-RJ) or less/MR-J4-40B1(-RJ) or less 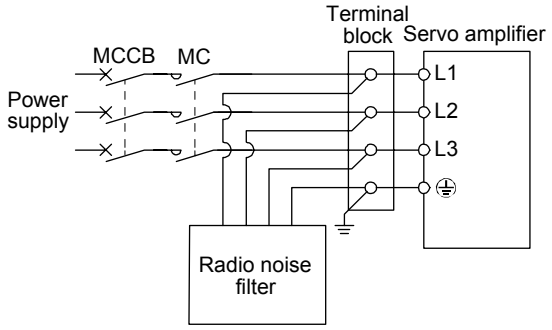 ・MR-J4-500B(-RJ) or less/MR-J4-500B4(-RJ) or less 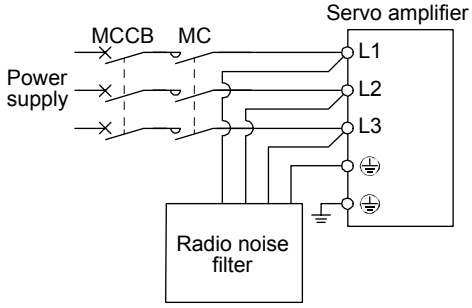 	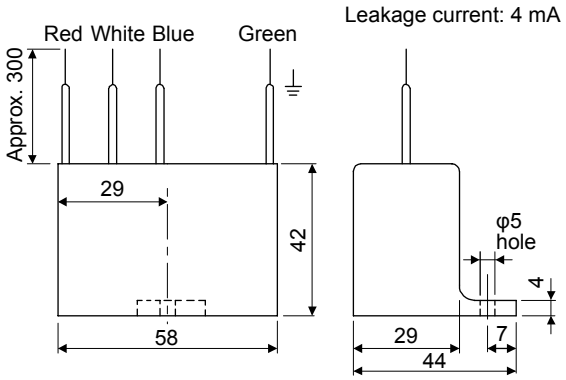

(f) Varistor for input power supply (recommended)

Varistors are effective to prevent exogenous noise and lightning surge from entering the servo amplifier. When using a varistor, connect it between each phase of the input power supply of the equipment. For varistors, the TND20V-431K, TND20V-471K and TND20V-102K, manufactured by NIPPON CHEMI-CON, are recommended. For detailed specification and usage of the varistors, refer to the manufacturer catalog.

Power supply voltage	Varistor	Maximum rating					Maximum limit voltage		Static capacity (reference value)	Varistor voltage rating (range) V1 mA
		Permissible circuit voltage		Surge current immunity	Energy immunity	Rated pulse power	[A]	[V]		
		AC [Vrms]	DC [V]	8/20 μs [A]	2 ms [J]	[W]			[pF]	[V]
200 V class/ 100 V class	TND20V-431K	275	350	10000/1 times	195	1.0	100	710	1300	430 (387 to 473)
	TND20V-471K	300	385	7000/2 times	215			775	1200	470 (423 to 517)
400 V class	TND20V-102K	625	825	7500/1 time 6500/2 times	400	1.0	100	1650	560	1000 (900 to 1100)

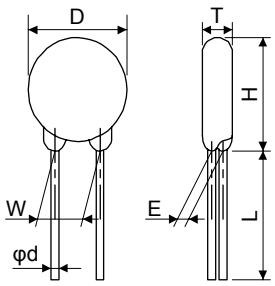

[Unit: mm]

Model	D Max.	H Max.	T Max.	E ±1.0	(Note) L min.	φd ±0.05	W ±1.0
TND20V-431K	21.5	24.5	6.4	3.3	20	0.8	10.0
TND20V-471K			6.6	3.5			
TND20V-102K	22.5	25.5	9.5	6.4	20	0.8	10.0

Note. For special purpose items for lead length (L), contact the manufacturer.

11.15 Earth-leakage current breaker

(1) Selection method

High-frequency chopper currents controlled by pulse width modulation flow in the AC servo circuits. Leakage currents containing harmonic contents are larger than those of the motor which is run with a commercial power supply.

Select an earth-leakage current breaker according to the following formula, and ground the servo amplifier, servo motor, etc. securely.

To minimize leakage currents, make the input and output cables as short as possible, and make the grounding cable longer than 30 cm.

Rated sensitivity current ≥ 10 • {Ig1 + Ign + Iga + K • (Ig2 + Igm)} [mA]····· (11.1)

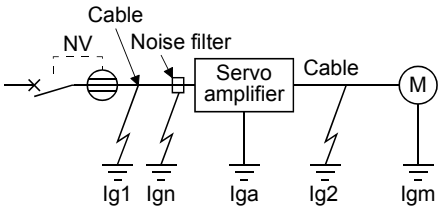

Earth-leakage current breaker		K
Type	Mitsubishi products	
Models provided with harmonic and surge reduction techniques	NV-SP NV-SW NV-CP NV-CW NV-HW	1
General models	BV-C1 NFB NV-L	3

Ig1: Leakage current on the electric channel from the earth-leakage current breaker to the input terminals of the servo amplifier (Found from Fig. 11.13.)

Ig2: Leakage current on the electric channel from the output terminals of the servo amplifier to the servo motor (Found from Fig. 11.13.)

Ign: Leakage current when a filter is connected to the input side (4.4 mA per one FR-BIF-(H))

Iga: Leakage current of the servo amplifier (Found from table 11.5.)

Igm: Leakage current of the servo motor (Found from table 11.4.)

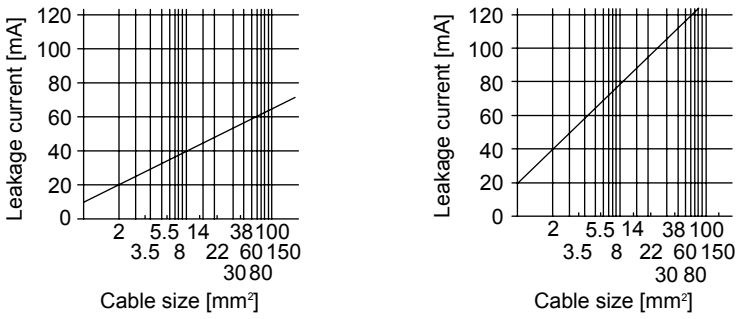

200 V class/100 V class (Note) 400 V class

Note. "Ig1" of 100 V class servo amplifiers will be 1/2 of 200 V class servo amplifiers.

Fig. 11.13 Example of leakage current per km (Ig1, Ig2) for CV cable run in metal conduit

Table 11.4 Servo motor leakage current example (Igm)

Servo motor power [kW]	Leakage current [mA]
0.05 to 1	0.1
1.2 to 2	0.2
3 to 3.5	0.3
4.2 to 5	0.5
7	0.7
9 to 11	1.0
15	1.3
22	2.3

Table 11.5 Servo amplifier leakage current example (Iga)

Servo amplifier capacity [kW]	Leakage current [mA]
0.1 to 0.6	0.1
0.75 to 3.5	0.15
5/7	2
11/15	5.5
22	7

Table 11.6 Earth-leakage current breaker selection example

Servo amplifier	Rated sensitivity current of earth-leakage current breaker [mA]
MR-J4-10B(-RJ) to MR-J4-350B(-RJ) MR-J4-60B4(-RJ) to MR-J4-350B4(-RJ) MR-J4-10B1(-RJ) to MR-J4-40B1(-RJ)	15
MR-J4-500B(-RJ) MR-J4-500B4(-RJ)	30
MR-J4-700B(-RJ) MR-J4-700B4(-RJ)	50
MR-J4-11KB(-RJ) to MR-J4-22KB(-RJ) MR-J4-11KB4(-RJ) to MR-J4-22KB4(-RJ)	100

(2) Selection example

Indicated below is an example of selecting an earth-leakage current breaker under the following conditions.

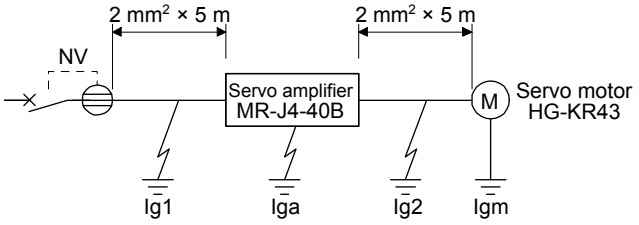

Use an earth-leakage current breaker designed for suppressing harmonics/surges.
Find the terms of equation (11.1) from the diagram.

$$Ig1 = 20 \cdot \frac{5}{1000} = 0.1 \text{ [mA]}$$

$$Ig2 = 20 \cdot \frac{5}{1000} = 0.1 \text{ [mA]}$$

Ign = 0 (not used)

Iga = 0.1 [mA]

Igm = 0.1 [mA]

Insert these values in equation (11.1).

$$Ig \geq 10 \cdot \{0.1 + 0 + 0.1 + 1 \cdot (0.1 + 0.1)\}$$
$$\geq 4 \text{ [mA]}$$

According to the result of calculation, use an earth-leakage current breaker having the rated sensitivity current (Ig) of 4.0 mA or more.
An earth-leakage current breaker having Ig of 15 mA is used with the NV-SP/SW/CP/CW/HW series.

11.16 EMC filter (recommended)

It is recommended that one of the following filters be used to comply with EN EMC directive. Some EMC filters have large in leakage current. When using an EMC filter, always use one for each servo amplifier.

(1) Combination with the servo amplifier

Servo amplifier	Recommended filter (Soshin Electric)				Mass [kg]
	Model	Rated current [A]	Rated voltage [VAC]	Leakage current [mA]	
MR-J4-10B(-RJ) to MR-J4-100B(-RJ)	(Note) HF3010A-UN	10	250	5	3.5
MR-J4-200B(-RJ) MR-J4-350B(-RJ)	(Note) HF3010A-UN	30			5.5
MR-J4-500B(-RJ) MR-J4-700B(-RJ)	(Note) HF3040A-UN	40		6.5	6
MR-J4-11KB(-RJ) MR-J4-15KB(-RJ) MR-J4-22KB(-RJ)	(Note) HF3100A-UN	100			12
MR-J4-60B4(-RJ) MR-J4-100B4(-RJ)	TF3005C-TX	5	500	5.5	6
MR-J4-200B4(-RJ) to MR-J4-700B4(-RJ)	TF3020C-TX	20			
MR-J4-11KB4(-RJ)	TF3030C-TX	30			7.5
MR-J4-15KB4(-RJ)	TF3040C-TX	40			12.5
MR-J4-22KB4(-RJ)	TF3060C-TX	60			
MR-J4-10B1(-RJ) to MR-J4-40B1(-RJ)	(Note) HF3010A-UN	10	250	5	3.5

Note. A surge protector is separately required to use any of these EMC filters.

(2) Connection example

(a) 200 V class/100 V class

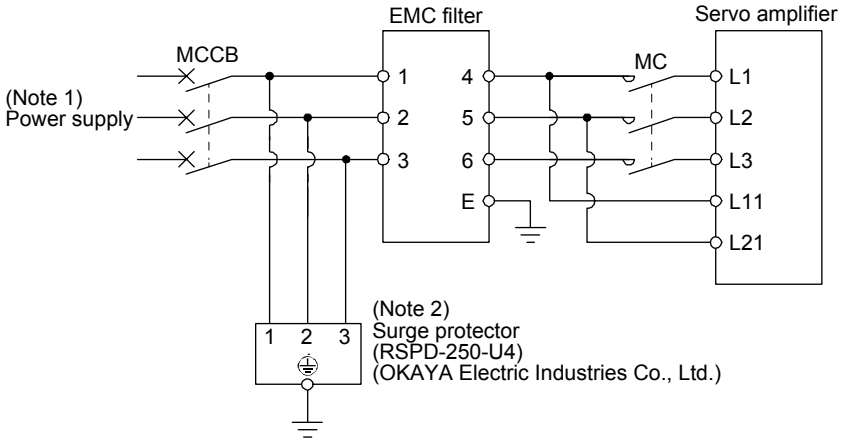

Note 1. Refer to section 1.3 for the power supply specifications.
2. The example is when a surge protector is connected.

(b) 400 V class

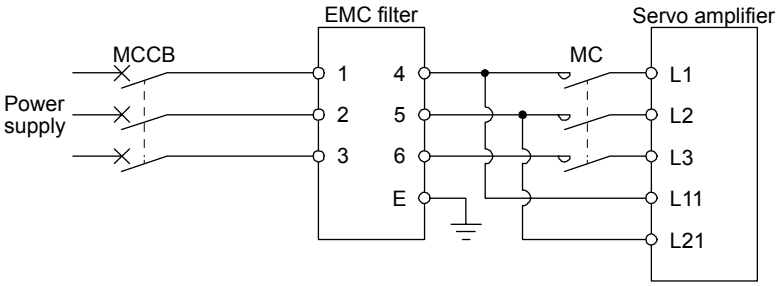

(3) Dimensions

(a) EMC filter

HF3010A-UN

[Unit: mm]

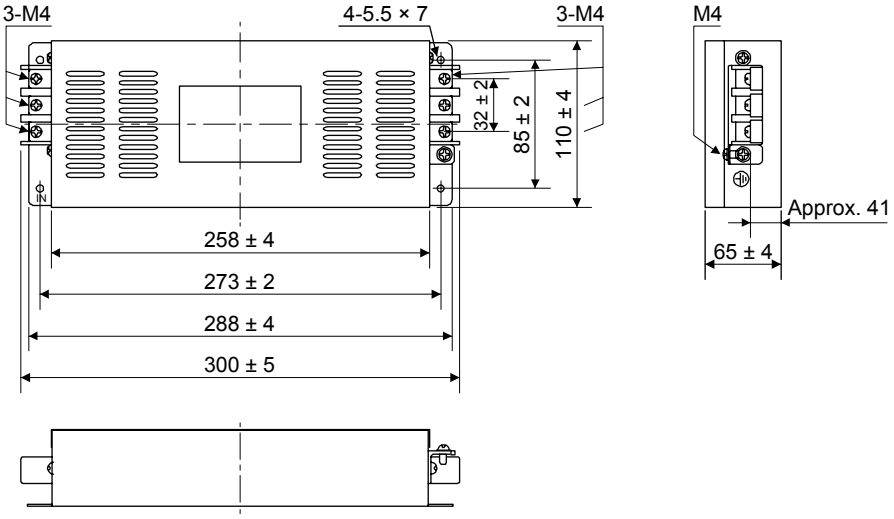

HF3030A-UN/HF-3040A-UN

[Unit: mm]

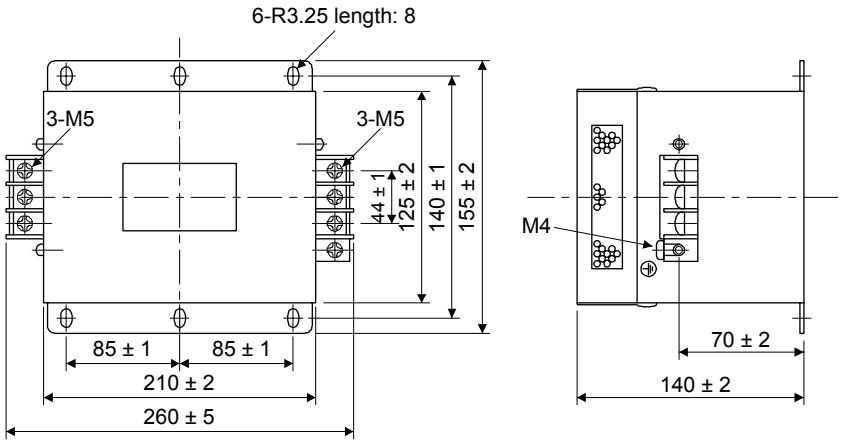

HF3100A-UN

[Unit: mm]

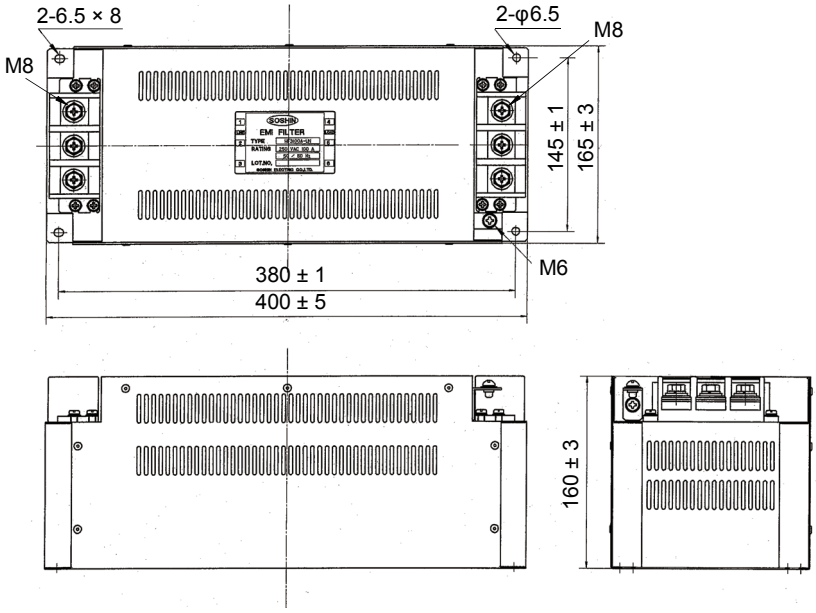

TF3005C-TX/TX3020C-TX/TF3030C-TX

[Unit: mm]

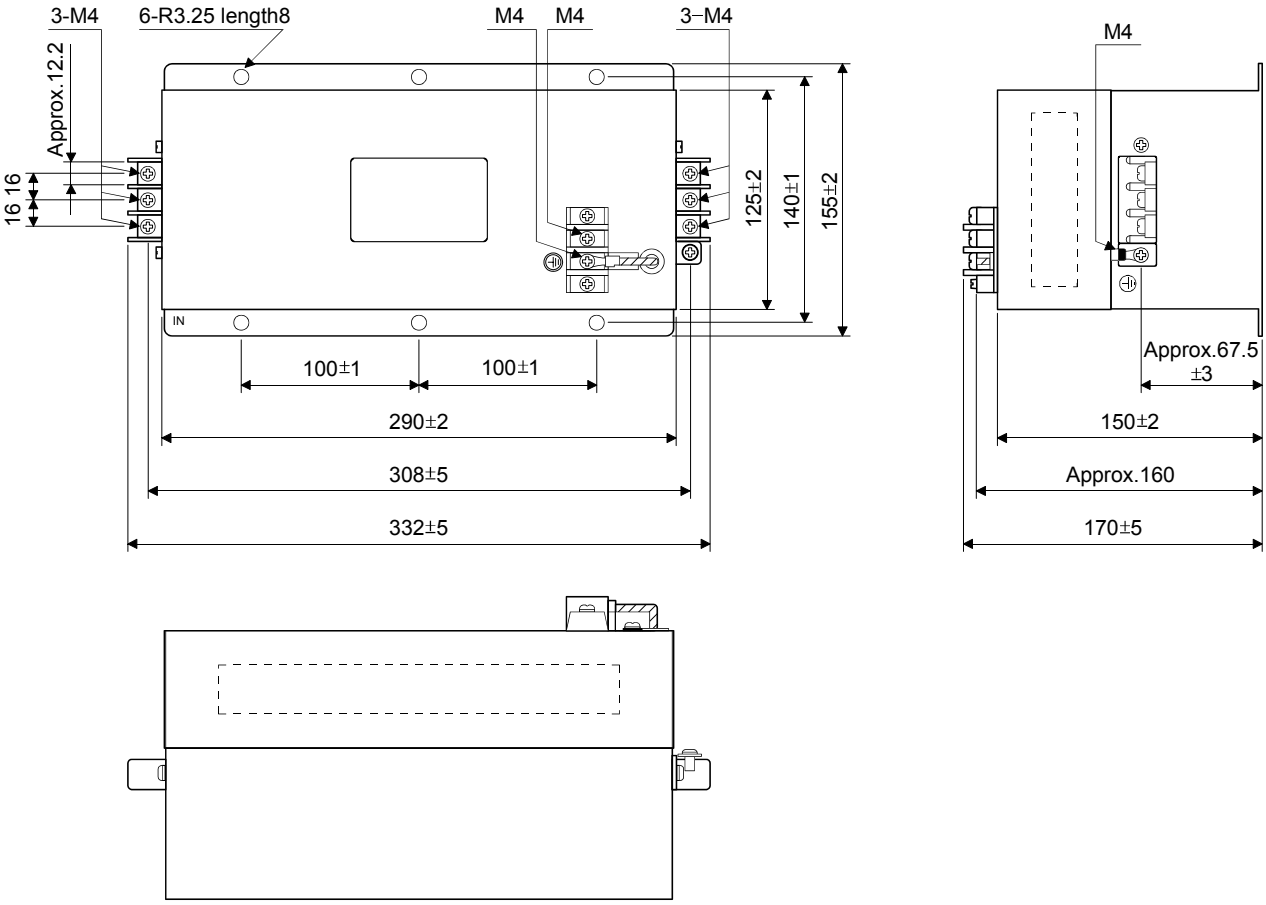

TF3040C-TX/TF3060C-TX

[Unit: mm]

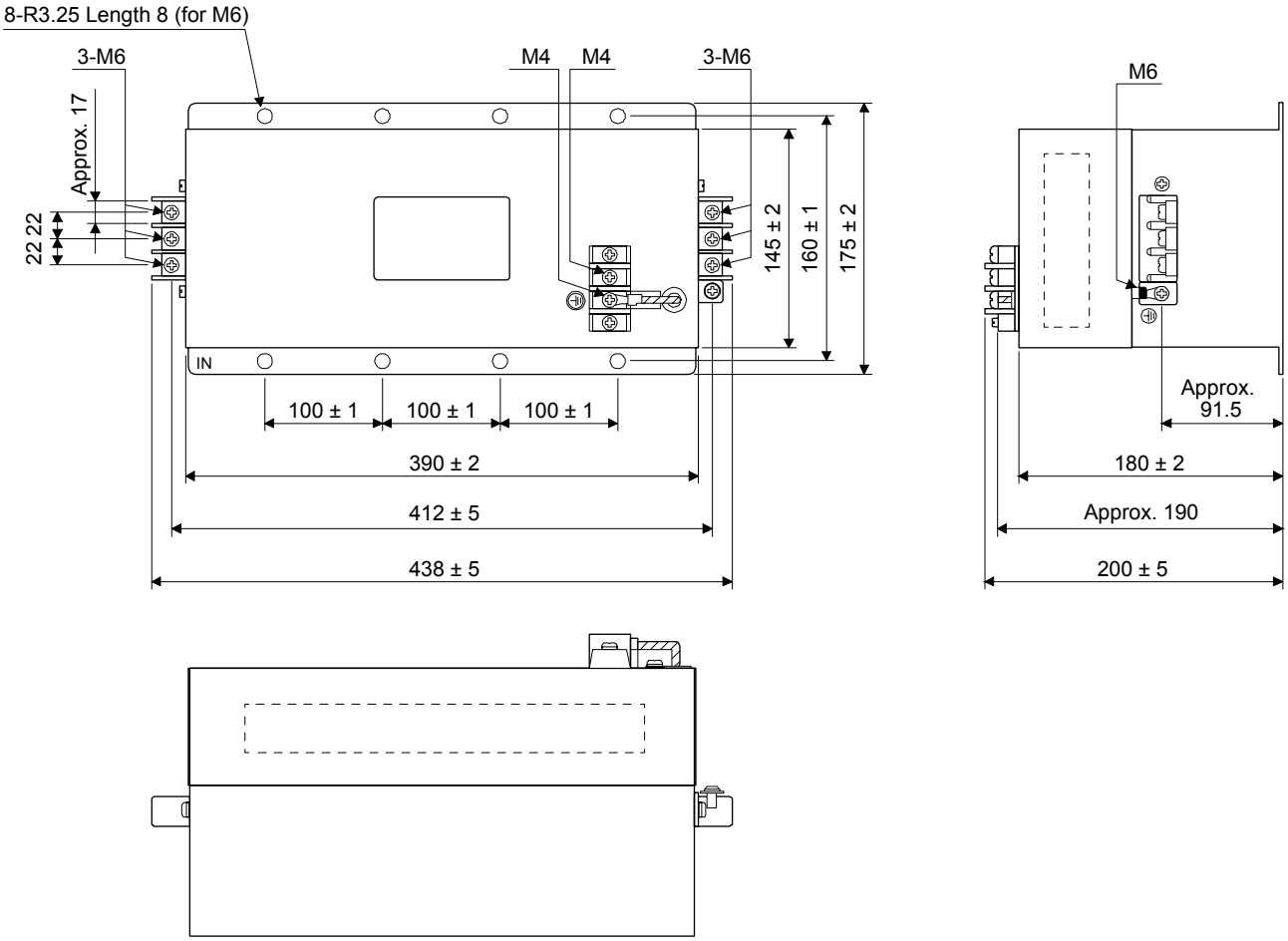

(b) Surge protector

RSPD-250-U4

[Unit: mm]

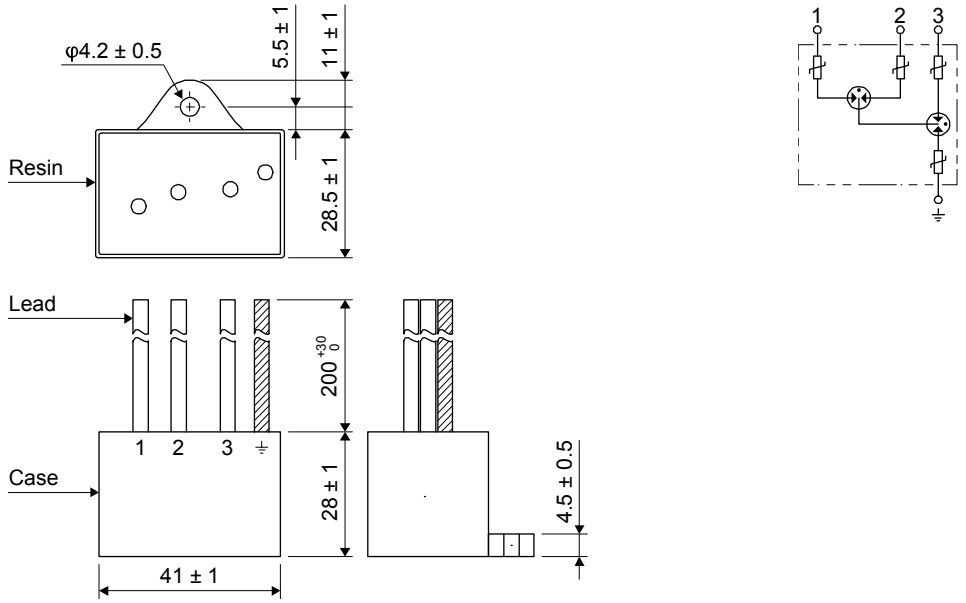

11.17 External dynamic brake

⚠CAUTION	●Use an external dynamic brake for a servo amplifier of MR-J4-11KB(-RJ) to MR-J4-22KB(-RJ) and MR-J4-11KB4(-RJ) to MR-J4-22KB4(-RJ). Failure to do so will cause an accident because the servo motor dose not stop immediately but coasts at an alarm occurrence for which the servo motor does not decelerate to stop. Ensure the safety in the entire equipment. For alarms for which the servo motor does not decelerate to stop, refer to chapter 8.

POINT

- ●EM2 has the same function as EM1 in the torque control mode.
- ●Configure up a sequence which switches off the magnetic contactor of the external dynamic brake after (or as soon as) the servo-on command has been turned off at a power failure or a malfunction.
- ●For the braking time taken when the external dynamic brake is operated, refer to section 10.3.
- ●The external dynamic brake is rated for a short duration. Do not use it very frequently.
- ●When using the 400 V class external dynamic brake, the power supply voltage is restricted to 1-phase 380 V AC to 463 V AC (50 Hz/60 Hz).
- ●Dynamic brake operates at occurrence of alarm, [AL. E6 Servo forced stop warning], and [AL. E7 Controller forced stop warning], and when power is turned off. Do not use external dynamic brake to stop in a normal operation as it is the function to stop in emergency.
- ●For a machine operating at the recommended load to motor inertia ratio or less, the estimated number of usage times of the external dynamic brake is 1000 times while the machine decelerates from the rated speed to a stop once in 10 minutes.
- ●Be sure to enable EM1 (Forced stop 1) after servo motor stops when using EM1 (Forced stop 1) frequently in other than emergency.

(1) Selection of external dynamic brake

The dynamic brake is designed to bring the servo motor to a sudden stop when a power failure occurs or the protective circuit is activated, and is built in the 7 kW or less servo amplifier. Since it is not built in the 11 kW or more servo amplifier, purchase it separately. Assign DB (Dynamic brake interlock) to any of CN3-9, CN3-13, and CN3-15 pins in [Pr. PD07] to [Pr. PD09].

Servo amplifier	External dynamic brake
MR-J4-11KB(-RJ)	DBU-11K
MR-J4-15KB(-RJ)	DBU-15K
MR-J4-22KB(-RJ)	DBU-22K-R1
MR-J4-11KB4(-RJ)	DBU-11K-4
MR-J4-15KB4(-RJ)	DBU-22K-4
MR-J4-22KB4(-RJ)	

(2) Connection example

(a) 200 V class

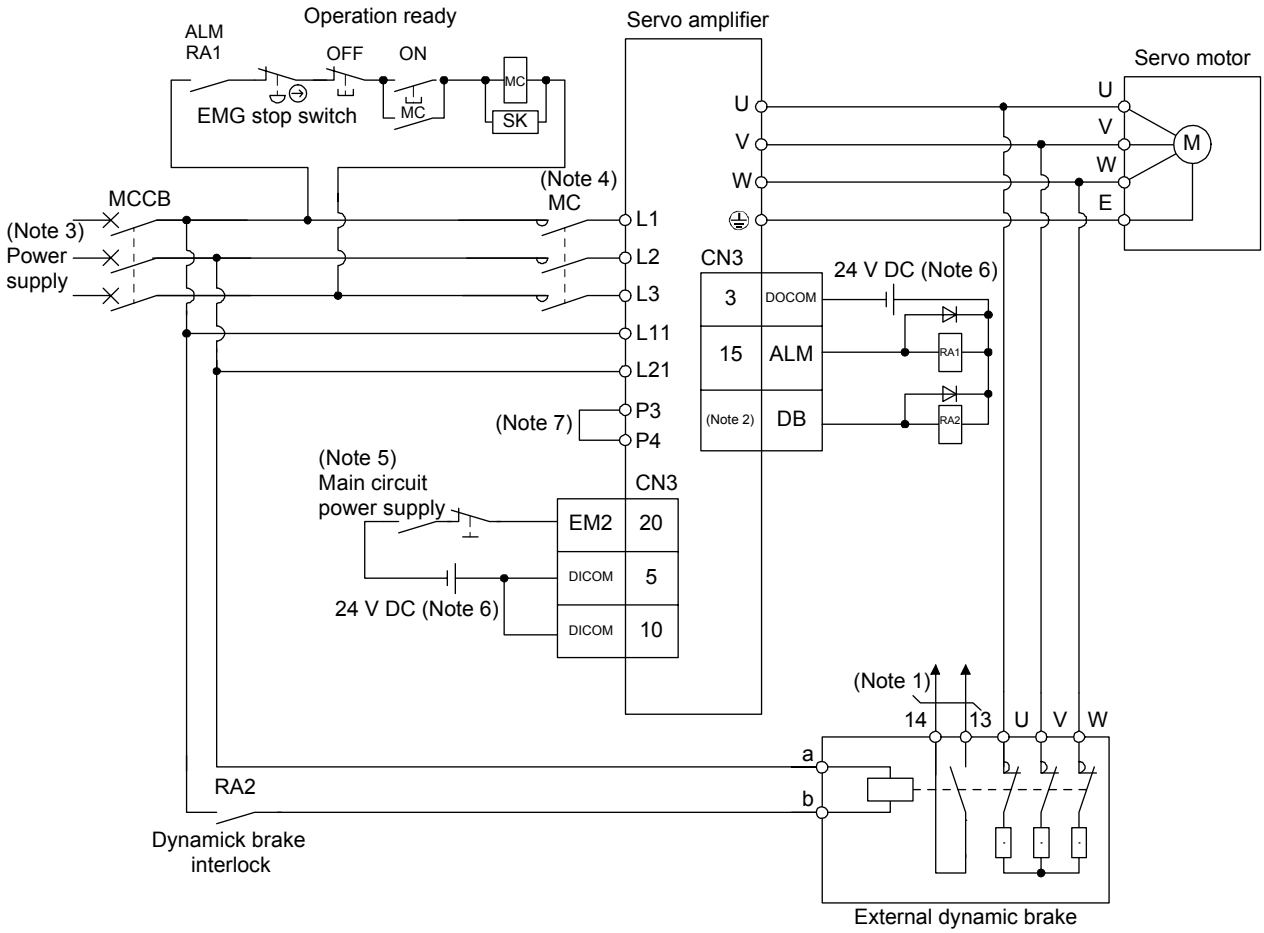

Note 1. Terminals 13 and 14 are normally open contact outputs. If the external dynamic brake is seized, terminals 13 and 14 will open. Therefore, configure up an external sequence to prevent servo-on.

2. Assign DB (Dynamic brake interlock) in [Pr. PD07] to [Pr. PD09].

3. For the power supply specifications, refer to section 1.3.

4. Depending on the main circuit voltage and operation pattern, bus voltage decreases, and that may cause the forced stop deceleration to shift to the dynamic brake deceleration. When dynamic brake deceleration is not required, slow the time to turn off the magnetic contactor.

5. Turn off EM2 when the main power circuit power supply is off.

6. The illustration of the 24 V DC power supply is divided between input signal and output signal for convenience. However, they can be configured by one.

7. Between P3 and P4 is connected by default. When using the power factor improving DC reactor, remove the short bar between P3 and P4. Refer to section 11.11 for details. Additionally, a power factor improving DC reactor and power factor improving AC reactor cannot be used simultaneously.

(b) 400 V class

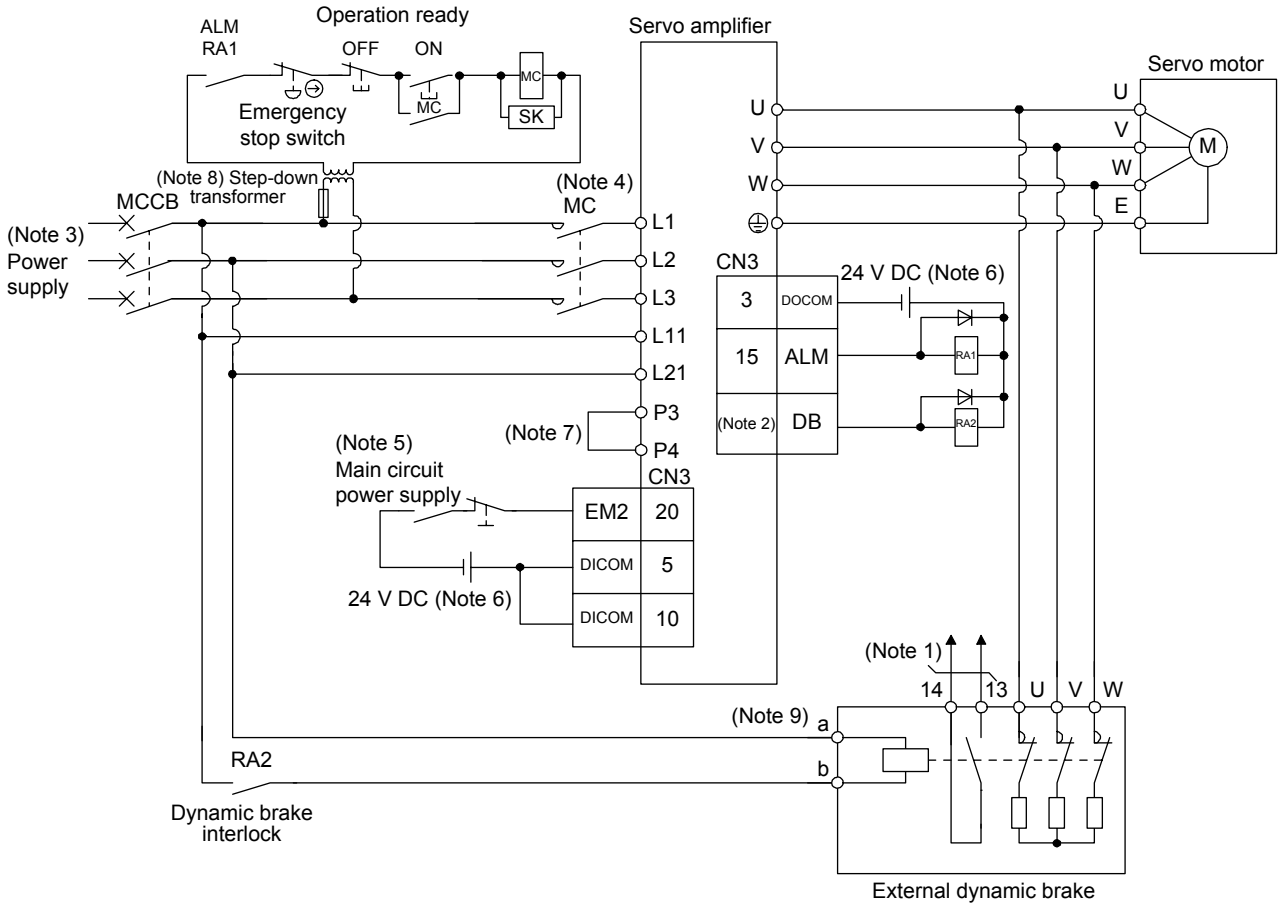

Note 1. Terminals 13 and 14 are normally open contact outputs. If the external dynamic brake is seized, terminals 13 and 14 will open. Therefore, configure an external sequence to prevent servo-on.

2. Assign DB (Dynamic brake interlock) in [Pr. PD07] to [Pr. PD09].

3. For power supply specifications, refer to section 1.3.

4. Depending on the main circuit voltage and operation pattern, bus voltage decreases, and that may cause the forced stop deceleration to shift to the dynamic brake deceleration. When dynamic brake deceleration is not required, slow the time to turn off the magnetic contactor.

5. Turn off EM2 when the main power circuit power supply is off.

6. The illustration of the 24 V DC power supply is divided between input signal and output signal for convenience. However, they can be configured by one.

7. Between P3 and P4 is connected by default. When using the power factor improving DC reactor, remove the short bar between P3 and P4. Refer to section 11.11 for details. Additionally, a power factor improving DC reactor and power factor improving AC reactor cannot be used simultaneously.

8. Stepdown transformer is required when the coil voltage of the magnetic contactor is 200 V class.

9. The power supply voltage of the inside magnet contactor for 400 V class external dynamic brake DBU-11K-4 and DBU-22K-4 is restricted as follows. When using these external dynamic brakes, use them within the range of the power supply.

External dynamic brake	Power supply voltage
DBU-11K-4 DBU-22K-4	1-phase 380 V AC to 463 V AC, 50 Hz/60 Hz

(3) Timing chart

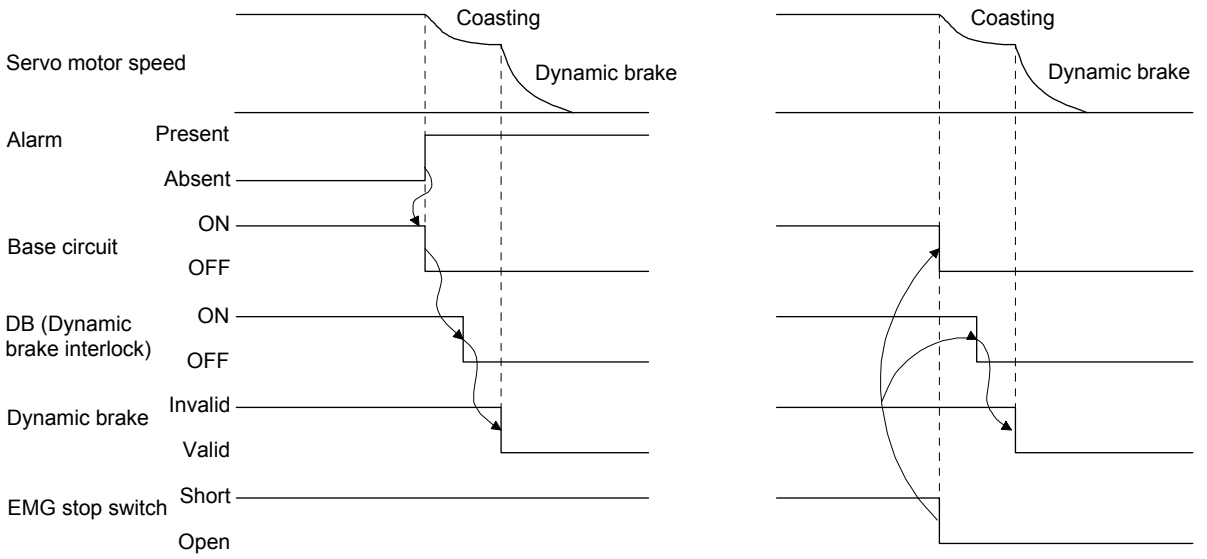

a. Timing chart at alarm occurrence

b. Timing chart at EMG stop switch validity

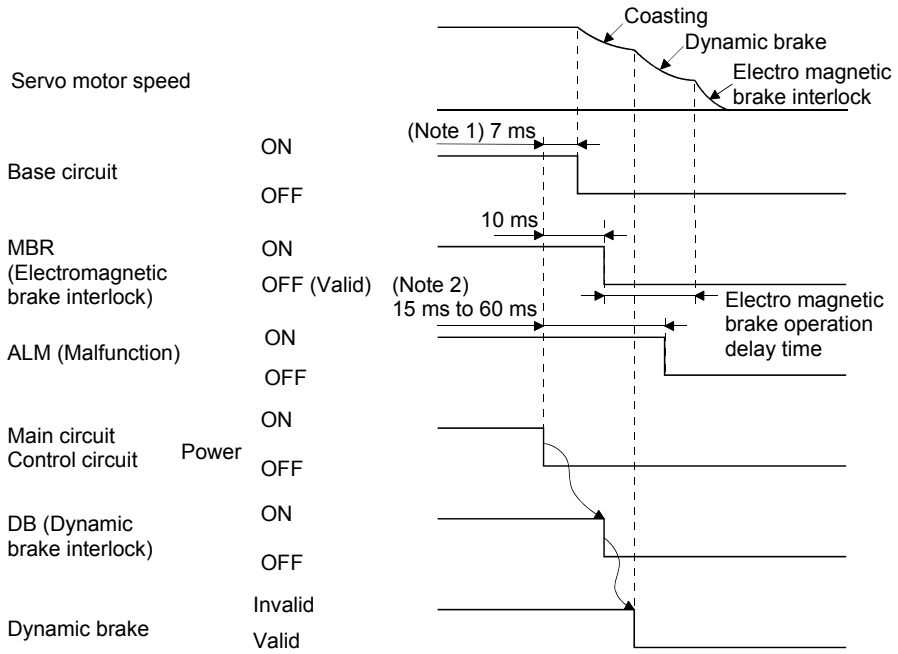

Note 1. When powering off, DB (Dynamic brake interlock) will be turned off, and the base circuit is turned off earlier than usual before an output shortage occurs. (Only when assigning the DB as the output signal)

2. Variable according to the operation status.

c. Timing chart when both of the main and control circuit power are off

(4) Dimensions

(a) DBU-11K/DBU-15K/DBU-22K-R1

[Unit: mm]

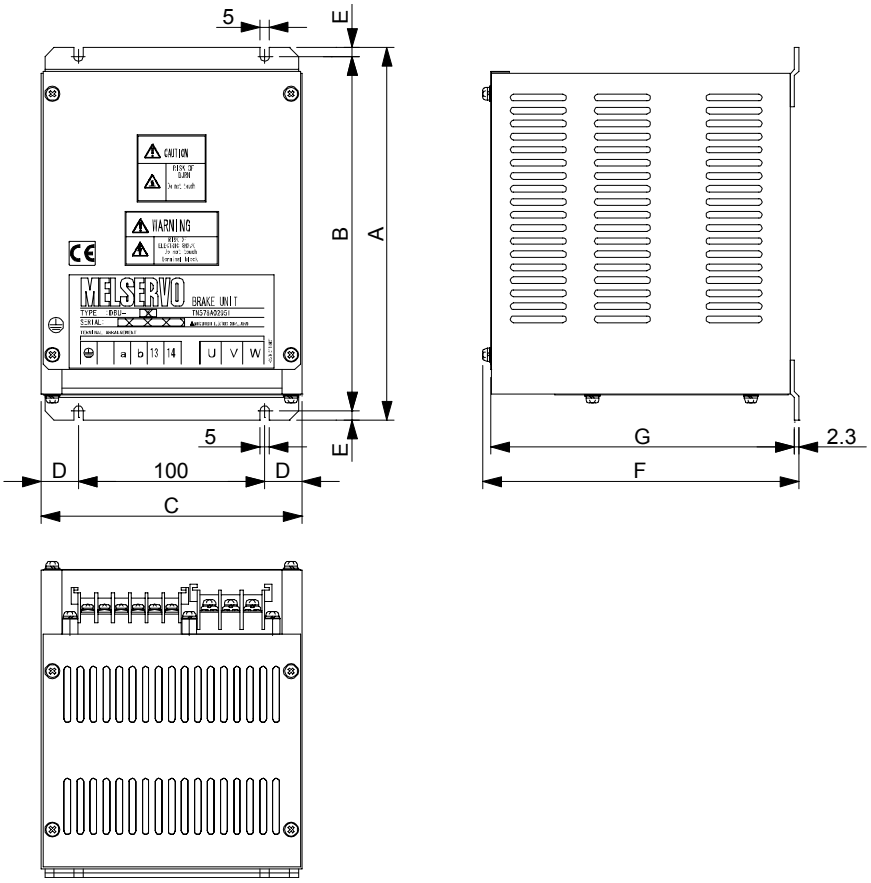

Terminal block

⏚		a	b	13	14

Screw: M3.5
Tightening torque: 0.8 [N•m]

U	V	W

Screw: M4
Tightening torque: 1.2 [N•m]

External dynamic brake	A	B	C	D	E	F	G	Mass [kg]	(Note) Connection wire [mm^2]	
									U/V/W	Except U/V/W
DBU-11K	200	190	140	20	5	170	163.5	2	5.5 (AWG 10)	2 (AWG 14)
DBU-15K/DBU-22K-R1	250	238	150	25	6	235	228	6	5.5 (AWG 10)	2 (AWG 14)

Note. Selection conditions of wire size is as follows.
600 V grade heat-resistant polyvinyl chloride insulated wire (HIV wire)
Construction condition: Single wire set in midair

(b) DBU-11K-4/DBU-22K-4

[Unit: mm]

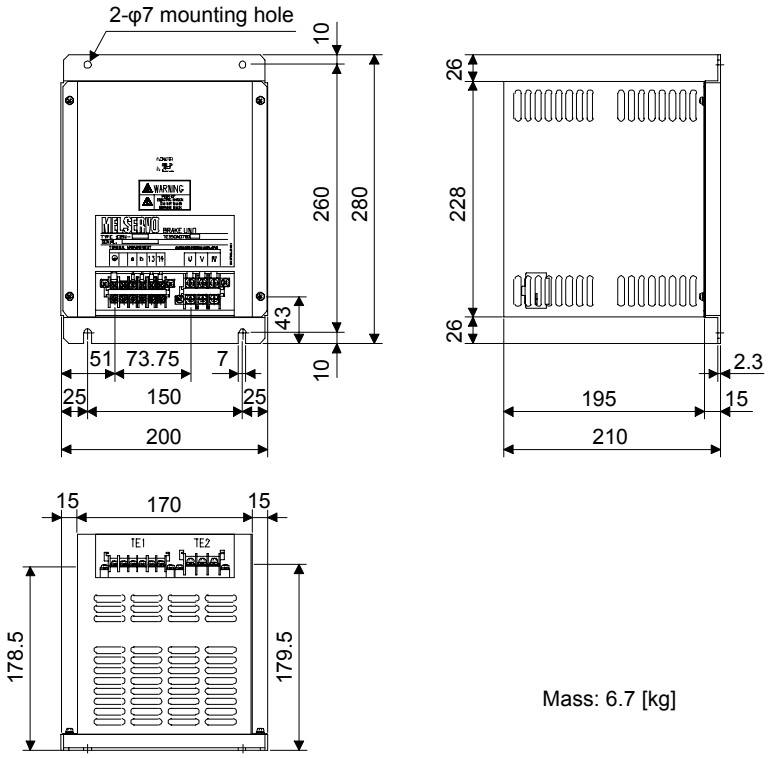

Mass: 6.7 [kg]

Terminal block

TE1

⏚		a	b	13	14

Screw: M3.5
Tightening torque: 0.8 [N•m]

TE2

U	V	W

Screw: M4
Tightening torque: 1.2 [N•m]

External dynamic brake	(Note) Connection wire [mm^2]	
	U/V/W	Except U/V/W
DBU-11K-4	5.5 (AWG 10)	2 (AWG 14)
DBU-22K-4	5.5 (AWG 10)	2 (AWG 14)

Note. Selection conditions of wire size is as follows.
Wire type: 600 V grade heat-resistant polyvinyl chloride insulated wire (HIV wire)
Construction condition: Single wire set in midair

11.18 Heat sink outside mounting attachment (MR-J4ACN15K/MR-J3ACN)

Use the heat sink outside mounting attachment to mount the heat generation area of the servo amplifier in the outside of the cabinet to dissipate servo amplifier-generated heat to the outside of the cabinet and reduce the amount of heat generated in the cabinet. In addition, designing a compact cabinet is allowed.
In the cabinet, machine a hole having the panel cut dimensions, fit the heat sink outside mounting attachment to the servo amplifier with the fitting screws (4 screws supplied), and install the servo amplifier to the cabinet.
Please prepare screws for mounting. They do not come with.
The environment outside the cabinet when using the heat sink outside mounting attachment should be within the range of the servo amplifier operating environment.
The heat sink outside mounting attachments are used for MR-J4-11KB(-RJ) to MR-J4-22KB(-RJ) and MR-J4-11KB4(-RJ) to MR-J4-22KB4(-RJ).
The following shows the combinations.

Servo amplifier	Heat sink outside mounting attachment
MR-J4-11KB(-RJ) MR-J4-15KB(-RJ)	MR-J4ACN15K
MR-J4-22KB(-RJ)	MR-J3ACN
MR-J4-11KB4(-RJ) MR-J4-15KB4(-RJ)	MR-J4ACN15K
MR-J4-22KB4(-RJ)	MR-J3ACN

(1) MR-J4ACN15K

(a) Panel cut dimensions

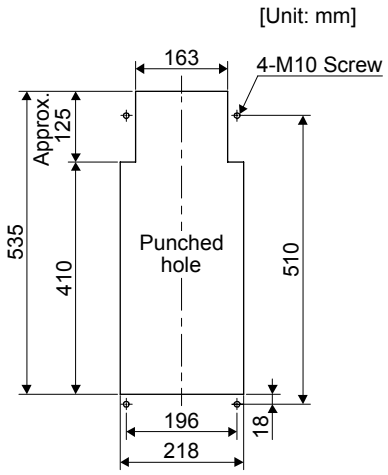

(b) How to assemble the attachment for heat sink outside mounting attachment

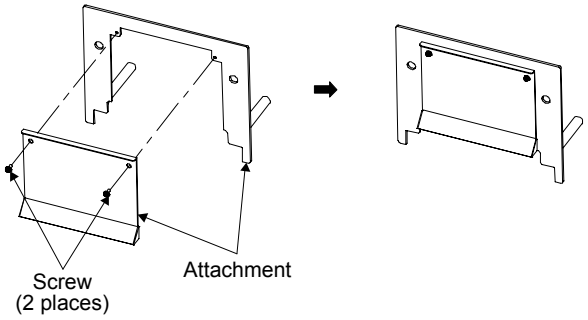

(c) Mounting method

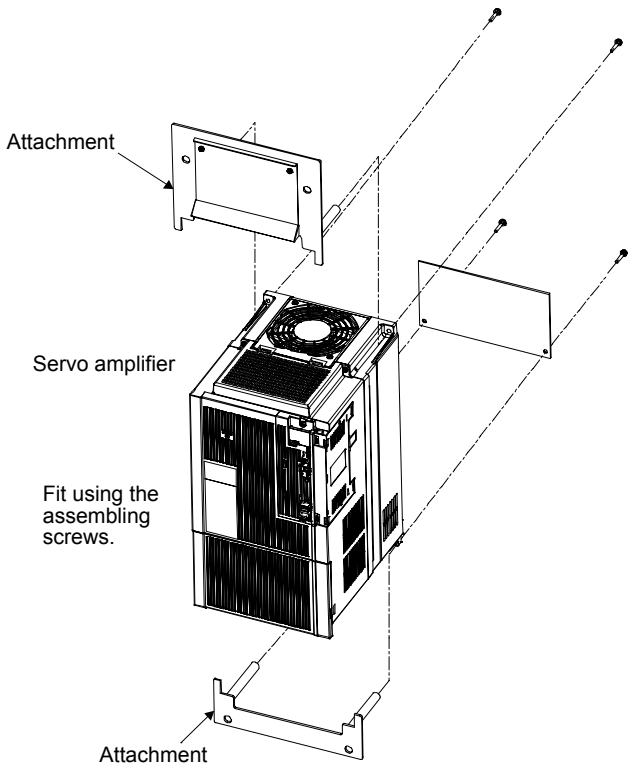

a. Assembling the heat sink outside mounting attachment

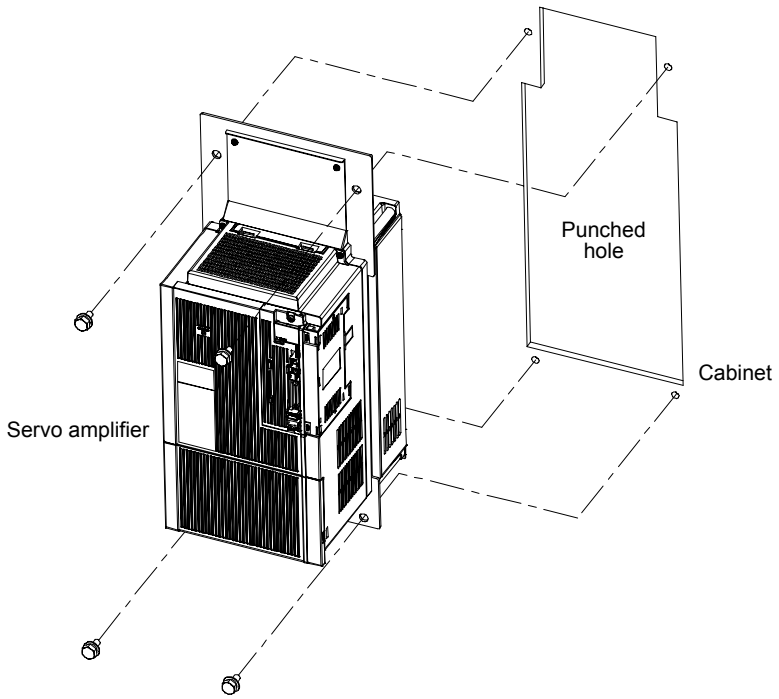

b. Mounting it to inside cabinet

(d) Mounting dimensional diagram

[Unit: mm]

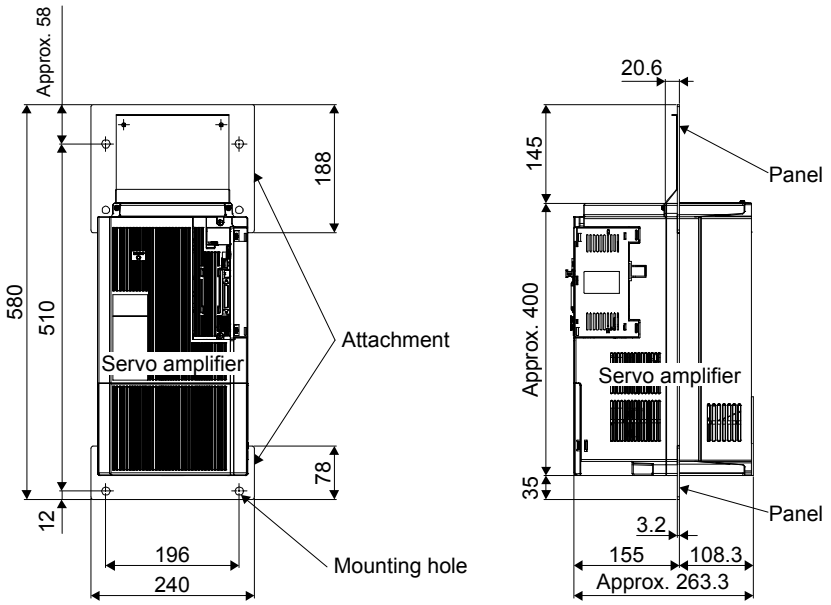

(2) MR-J3ACN

(a) Panel cut dimensions

[Unit: mm]

[Unit : mm]

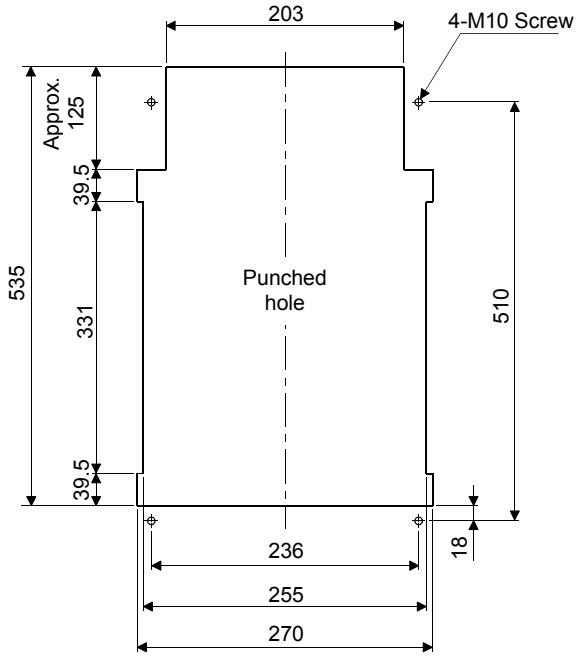

(b) How to assemble the attachment for heat sink outside mounting attachment

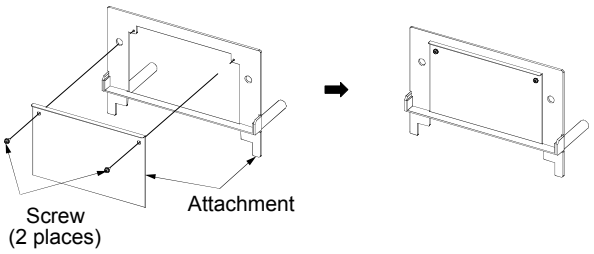

(c) Mounting method

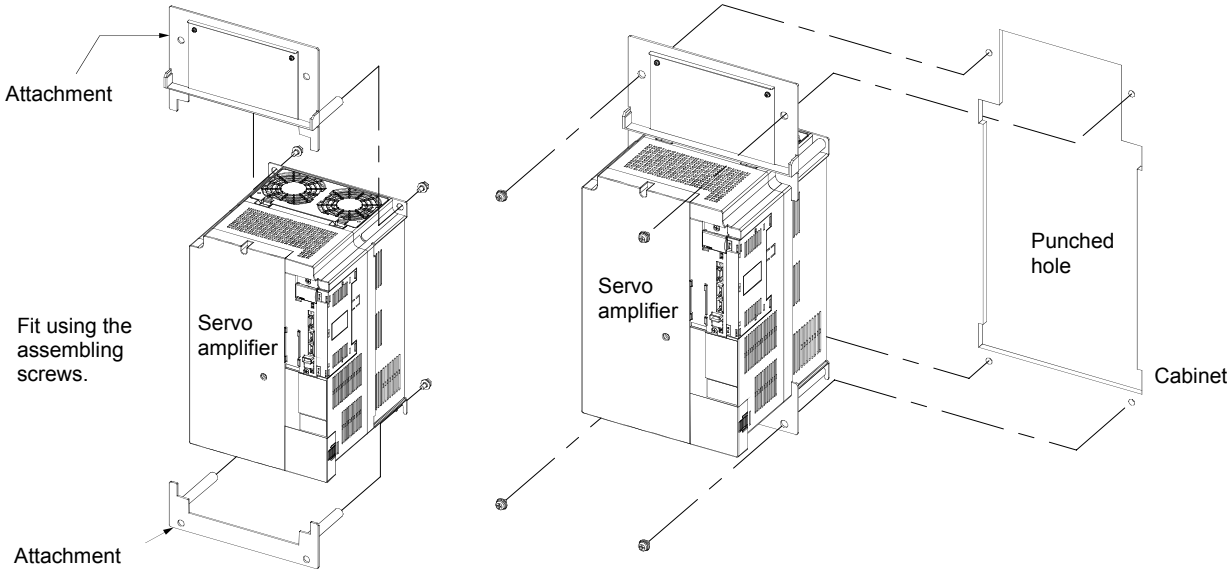

a. Assembling the heat sink outside mounting attachment

b. Mounting it to inside cabinet

(d) Mounting dimensional diagram

[Unit: mm]

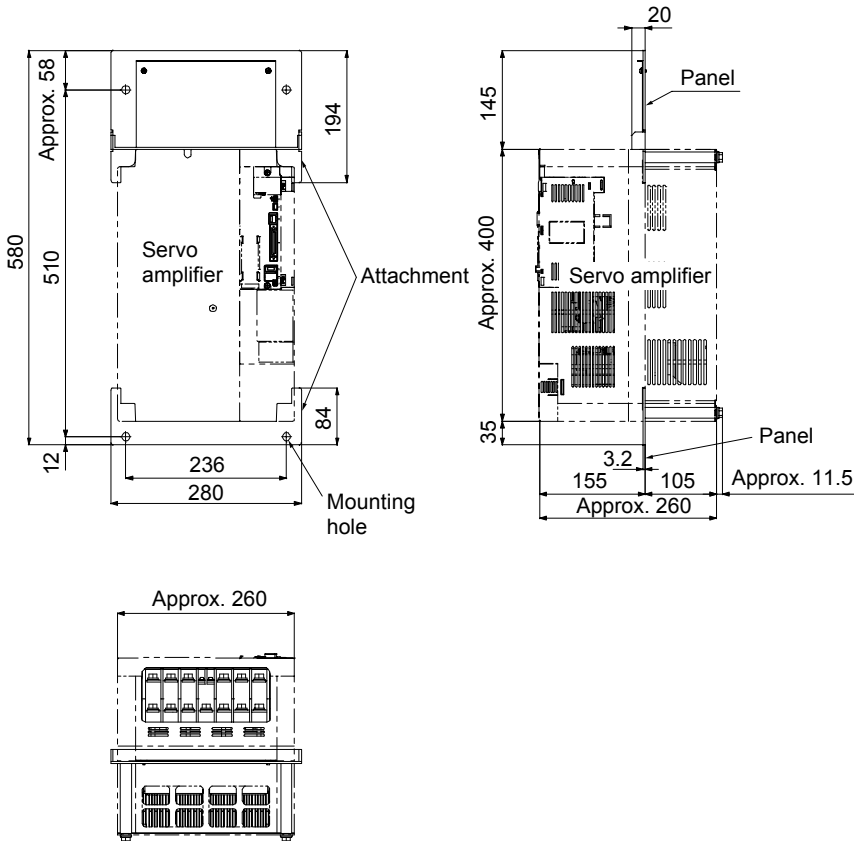

MEMO

12. ABSOLUTE POSITION DETECTION SYSTEM

⚠CAUTION	●If [AL. 25 Absolute position erased] or [AL. E3 Absolute position counter warning] has occurred, always perform home position setting again. Otherwise, it may cause an unexpected operation. ●Refer to appendix 2 and 3 for battery transportation and the new EU Battery Directive. ●If [AL. 25], [AL. 92], or [AL. 9F] occur due to such as short circuit of the battery, the MR-BAT6V1 battery can become hot. Use the MR-BAT6V1 battery with case to prevent getting burnt.

POINT

●For configuring the system absolute position detection system, there are two batteries of MR-BAT6V1SET battery and MR-BAT6V1BJ battery for junction battery cable. Compared with the MR-BAT6V1SET battery, The MR-BAT6V1BJ battery for junction battery cable has the following advantages.
- You can disconnected the encoder cable from the servo amplifier.
- You can change the battery with the control circuit power supply off.

●When absolute position data is erased from the encoder, always execute home position setting before operation. The absolute position data of the encoder will be erased in the followings. Additionally, when the battery is used out of specification, the absolute position data can be erased.
When the MR-BAT6V1SET battery was used...
- The encoder cable was disconnected.
- The battery was replaced when the control circuit power supply was off.

When the MR-BAT6V1BJ battery for junction battery cable is used...
- A connector or cable was disconnected between the servo motor and battery.
- The battery was replaced with procedures other than those of (3) in section 12.2.2.

●The MR-BAT6V1BJ battery for junction battery cable is only for the HG series servo motors. It cannot be used with direct drive motors.

●Do not use the MR-BAT6V1BJ battery for junction battery cable in the fully closed loop system and scale measurement function.

12.1 Summary

12.1.1 Features

For normal operation, the encoder consists of a detector designed to detect a position within one revolution and a cumulative revolution counter designed to detect the number of revolutions.
The absolute position detection system always detects the absolute position of the machine and keeps it battery-backed, independently of whether the servo system controller power is on or off. Therefore, once home position return is made at the time of machine installation, home position return is not needed when power is switched on thereafter.
Even at a power failure or a malfunction, the system can be easily restored.

12.1.2 Structure

The following shows a configuration of the absolute position detection system. For the battery connection, refer to (2) (b) of section 12.2.1 for the MR-BAT6V1SET battery. For the battery connection, refer to (2) (b) of section 12.2.2 for the MR-BAT6V1BJ battery for junction battery cable.

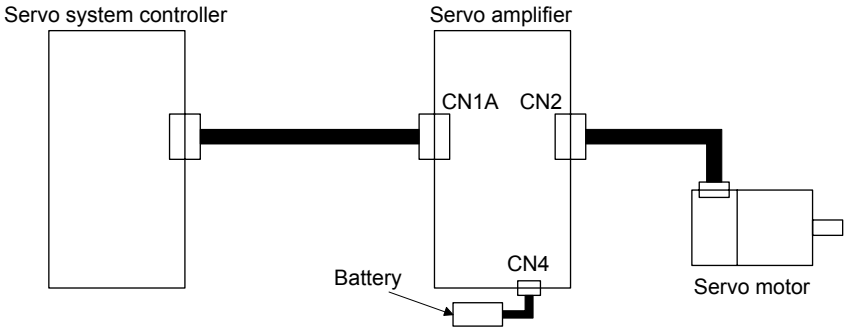

12.1.3 Parameter setting

Set "_ _ _ 1" in [Pr. PA03] to enable the absolute position detection system.

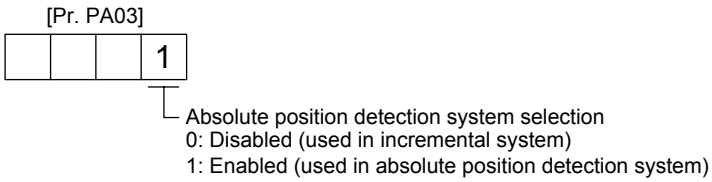

12.1.4 Confirmation of absolute position detection data

You can check the absolute position data with MR Configurator2.
Choose "Monitor" and "ABS Data Display" to open the absolute position data display screen.

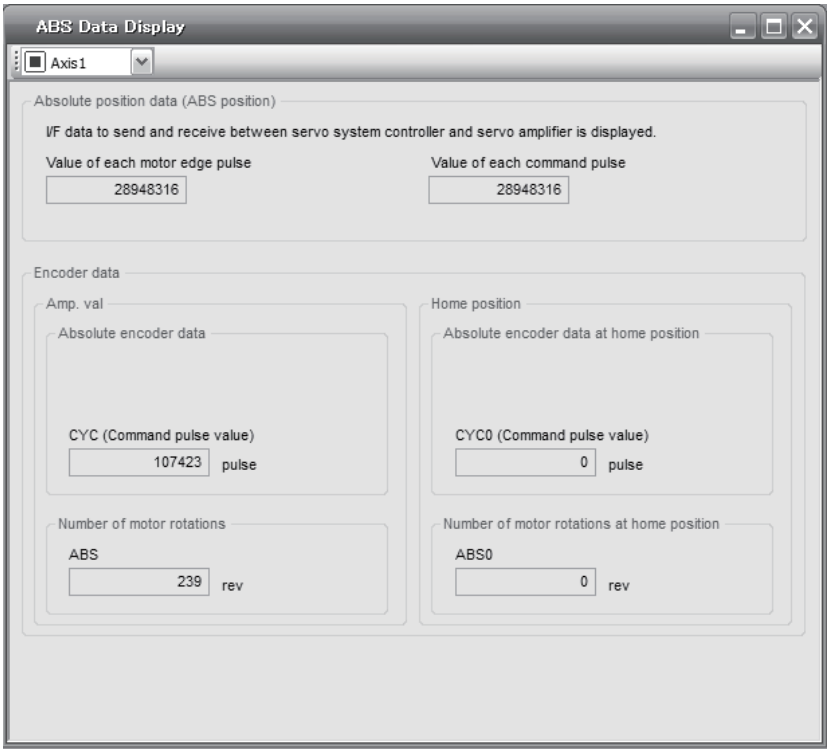

12.2 Battery

12.2.1 Using MR-BAT6V1SET battery

(1) Configuration diagram

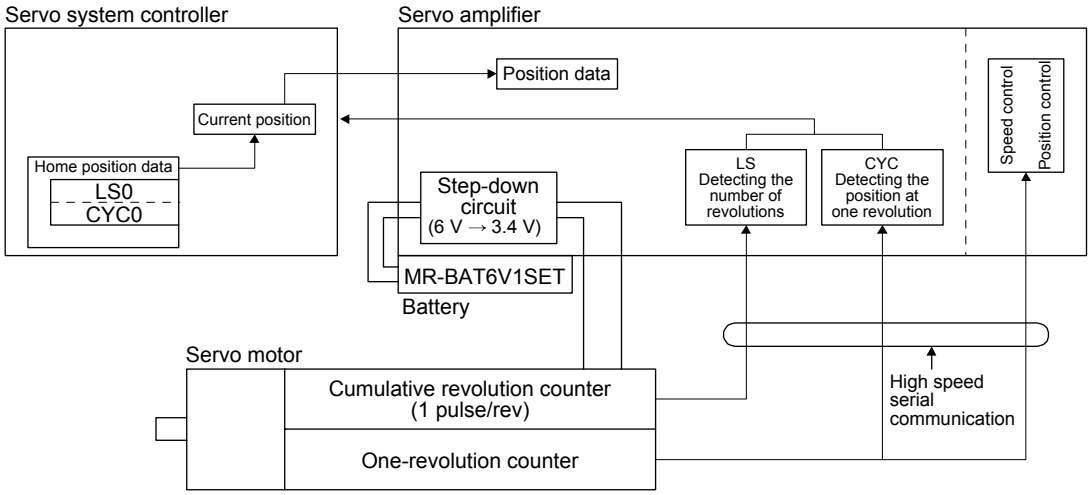

(2) Specifications

(a) Specification list

Item		Description
System		Electronic battery backup type
Battery	Model	MR-BAT6V1SET
	Battery pack	2CR17335A (primary lithium battery)
	Nominal voltage [V]	6
	Nominal capacity [mAh]	1650
	Storage temperature [°C]	0 to 55
	Operating temperature [°C]	0 to 55
	Amount of lithium metal [g]	1.2
	Mercury content	Less than 1 ppm
	Dangerous goods class	Inapplicable to Class 9 (Battery pack containing 2 g or less lithium)
	Operating humidity and storage humidity	90 %RH or less (non-condensing)
	Mass [g]	34
Maximum revolution range		Home position ± 32767 rev.
(Note 1) Maximum speed at power failure [r/min]	Rotary servo motor	6000 (only when acceleration time until 6000 r/min is 0.2 s or more)
	Direct drive motor	500 (only when acceleration time until 500 r/min is 0.1 s or more)
(Note 2) Battery backup time	Rotary servo motor	Approximately 20,000 hours (equipment power supply: off, ambient temperature: 20 °C) Approximately 29,000 hours (power-on time ratio: 25%, ambient temperature: 20 °C) (Note 4)
	Direct drive motor	Approximately 5,000 hours (equipment power supply: off, ambient temperature: 20 °C) Approximately 15,000 hours (power-on time ratio: 25%, ambient temperature: 20 °C) (Note 4)
(Note 3) Battery life		5 years from date of manufacture

Note 1. Maximum speed available when the shaft is rotated by external force at the time of power failure or the like. Also, if power is switched on at the servo motor speed of 3000 r/min or higher, position mismatch may occur due to external force or the like.
2. The data-holding time by the MR-BAT6V1SET battery. Replace the batteries within three years since the operation start regardless of the power supply of the servo amplifier on/off. If the battery is used out of specification, [AL. 25 Absolute position erased] may occur.
3. Quality of the batteries degrades by the storage condition. The battery life is 5 years from the production date regardless of the connection status.
4. The power-on time ratio 25% is equivalent to 8 hours power on for a weekday and off for a weekend.

(b) Battery mounting
Connect as follows.

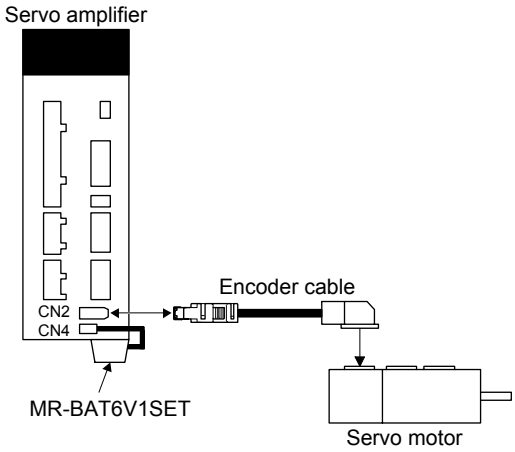

(3) Battery replacement procedure

⚠WARNING	●Before replacing a battery, turn off the main circuit power and wait for 15 minutes or longer until the charge lamp turns off. Then, check the voltage between P+ and N- with a voltage tester or others. Otherwise, an electric shock may occur. In addition, when confirming whether the charge lamp is off or not, always confirm it from the front of the servo amplifier.

⚠CAUTION	●The internal circuits of the servo amplifier may be damaged by static electricity. Always take the following precautions. ・Ground human body and work bench. ・Do not touch the conductive areas, such as connector pins and electrical parts, directly by hand.

POINT
●Replacing battery with the control circuit power off will erase the absolute position data.
●Before replacing batteries, check that the new battery is within battery life.

Replace the battery while only control circuit power is on. Replacing battery with the control circuit power on triggers [AL.9F.1 Low battery]. However, the absolute position data will not be erased.

(a) Battery installation and removal procedure

1) Installation procedure

POINT
●For the servo amplifier with a battery holder on the bottom, it is not possible to wire for the earth with the battery installed. Insert the battery after executing the earth wiring of the servo amplifier.

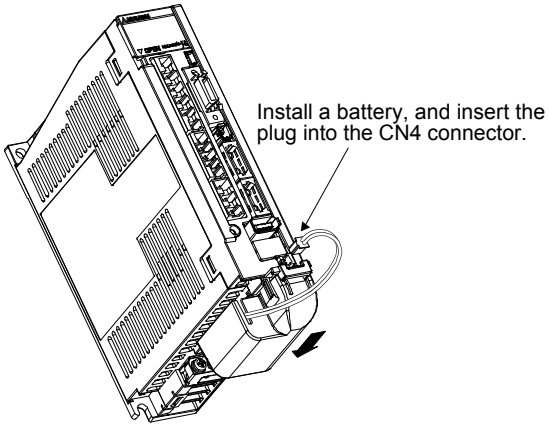

MR-J4-350B(-RJ) or less, MR-J4-200B4(-RJ) or less, MR-J4-40B1(-RJ) or less

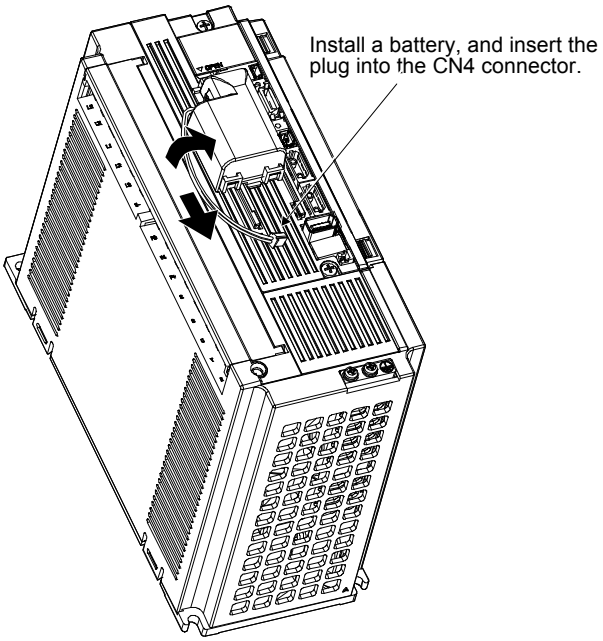

MR-J4-500B(-RJ) or more, MR-J4-350B4(-RJ) or more

2) Removal procedure

⚠CAUTION	●Pulling out the connector of the battery without the lock release lever pressed may damage the CN4 connector of the servo amplifier or the connector of the battery.

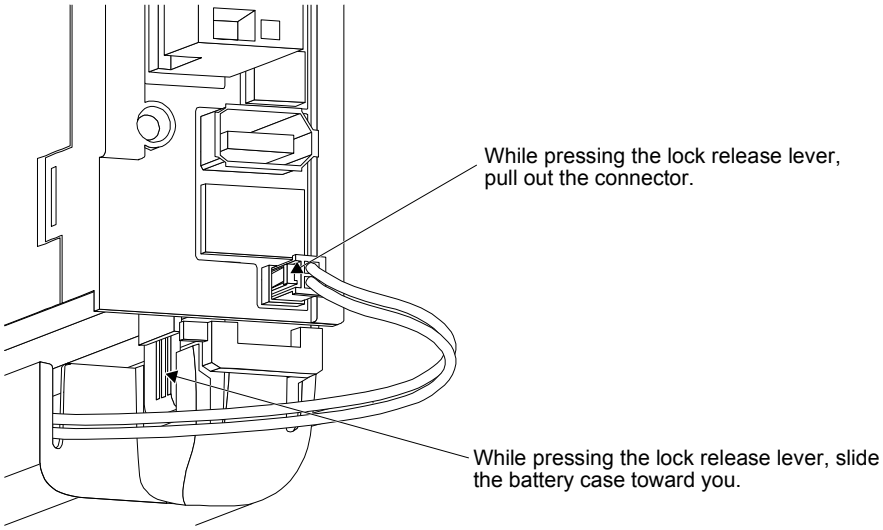

(b) Replacement procedure of the battery in the MR-BAT6V1SET

When the MR-BAT6V1SET battery reaches the end of its life, replace the MR-BAT6V1 battery in the MR-BAT6V1SET.

While pressing the locking part, open the cover.

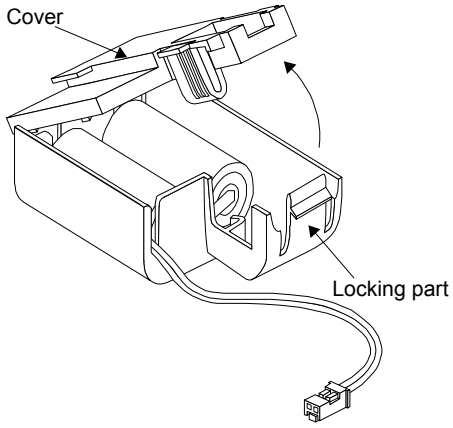

Replace the battery with a new MR-BAT6V1 battery.

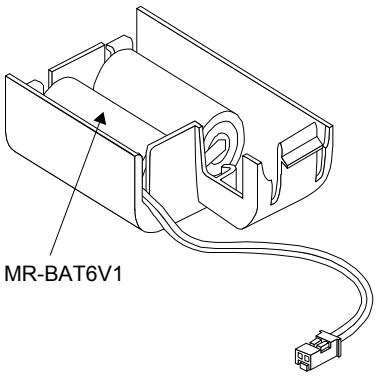

Press the cover until it is fixed with the projection of the locking part to close the cover.

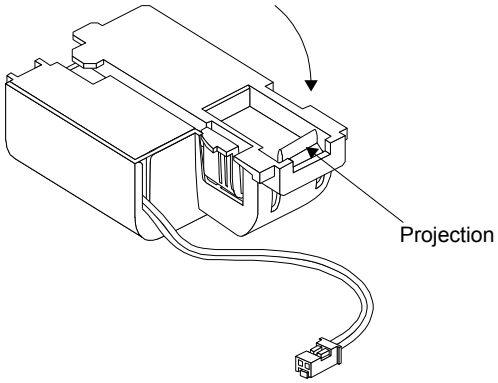

12.2.2 Using MR-BAT6V1BJ battery for junction battery cable

(1) Configuration diagram

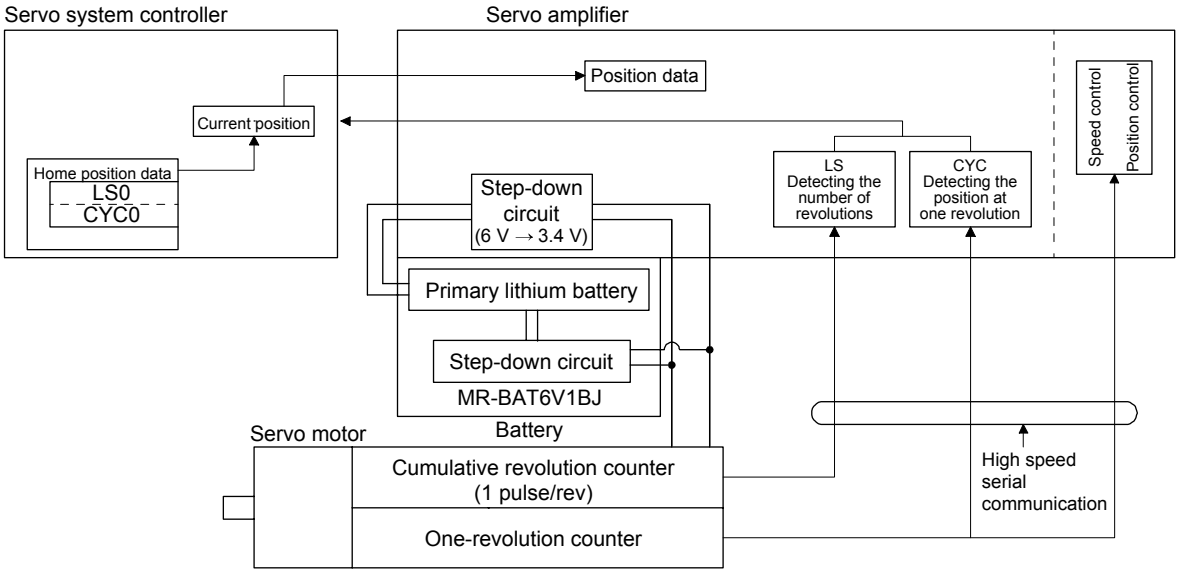

(2) Specifications

(a) Specification list

Item		Description
System		Electronic battery backup type
Battery	Model	MR-BAT6V1BJ
	Battery pack	2CR17335A (primary lithium battery)
	Nominal voltage [V]	6
	Nominal capacity [mAh]	1650
	Storage temperature [°C]	0 to 55
	Operating temperature [°C]	0 to 55
	Amount of lithium metal [g]	1.2
	Mercury content	Less than 1 ppm
	Dangerous goods class	Inapplicable to Class 9 (Battery pack containing 2 g or less lithium)
	Operating humidity and storage humidity	90 %RH or less (non-condensing)
	Mass [g]	66
Maximum revolution range		Home position ± 32767 rev.
(Note 1) Maximum speed at power failure [r/min]	Rotary servo motor	6000 (only when acceleration time until 6000 r/min is 0.2 s or more)
(Note 2) Battery backup time	Rotary servo motor	Approximately 20,000 hours (equipment power supply: off, ambient temperature: 20 °C) Approximately 29,000 hours (power-on time ratio: 25%, ambient temperature: 20 °C) (Note 4)
(Note 3) Battery life		5 years from date of manufacture

Note 1. Maximum speed available when the shaft is rotated by external force at the time of power failure or the like. Also, if power is switched on at the servo motor speed of 3000 r/min or higher, position mismatch may occur due to external force or the like.
2. The data-holding time by the MR-BAT6V1BJ battery for junction battery cable. Replace the batteries within three years since the operation start regardless of the power supply of the servo amplifier on/off. If the battery is used out of specification, [AL. 25 Absolute position erased] may occur.
3. Quality of the batteries degrades by the storage condition. The battery life is 5 years from the production date regardless of the connection status.
4. The power-on time ratio 25% is equivalent to 8 hours power on for a weekday and off for a weekend.

(b) Battery mounting

POINT

- Even if the connector for branch cable connection (black) is not connected to the MR-BT6VCBL03M junction battery cable, an alarm will not occur. Check that they are connected securely.
- When you transport a servo amplifier and machine apart, disconnect only CN2 and CN4 of the servo amplifier. When other connectors or cables are disconnected between the servo motor and battery, the absolute position data will be deleted.

Connect the product using the MR-BT6VCBL03M junction battery cable as follows.

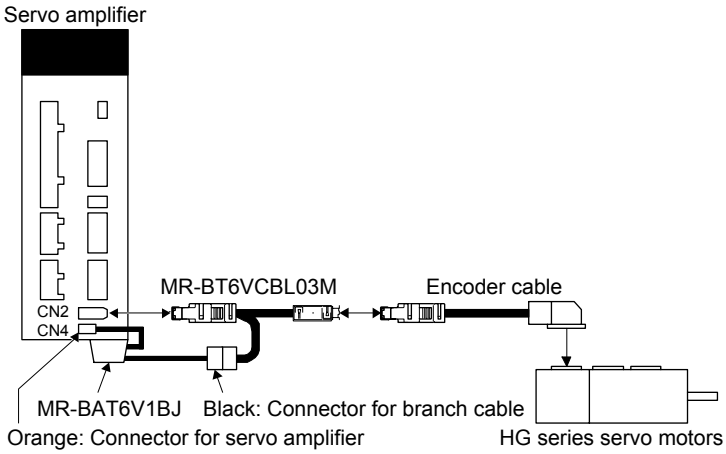

(3) Battery replacement procedure

⚠WARNING

- Before replacing a battery, turn off the main circuit power and wait for 15 minutes or longer until the charge lamp turns off. Then, check the voltage between P+ and N- with a voltage tester or others. Otherwise, an electric shock may occur. In addition, when confirming whether the charge lamp is off or not, always confirm it from the front of the servo amplifier.

⚠CAUTION

- The internal circuits of the servo amplifier may be damaged by static electricity. Always take the following precautions.
  - Ground human body and work bench.
  - Do not touch the conductive areas, such as connector pins and electrical parts, directly by hand.
- The battery built in MR-BAT6V1BJ cannot be replaced. Therefore, please do not disassemble the MR-BAT6V1BJ battery for junction battery cable. Otherwise, it may cause a malfunction.

POINT

- To avoid deleting data, replace the MR-BAT6V1BJ battery according to procedures written in this section.
- Before replacing batteries, check that the new battery is within battery life.

The MR-BAT6V1BJ battery for junction battery cable can be replaced with the control circuit power supply off.

(a) Battery installation and removal procedure
The battery installation and removal procedure to the servo amplifier are the same as for the MR-BAT6V1SET battery. Refer to (3) (a) of section 12.2.1.

(b) Preparation for replacing MR-BAT6V1BJ battery for junction battery cable
Prepare a new MR-BAT6V1BJ battery for junction battery cable as follows.

Model	Number and use	Remarks
MR-BAT6V1BJ	1 for replacement	Battery within two years from the production date.

(c) Procedures of replacing MR-BAT6V1BJ battery for junction battery cable
Replace the product as follows regardless of on/off of the control circuit power supply. When it is replaced with other procedures, the absolute position data will be erased.

1) Disconnect the connector for branch cable connection (black) of the old MR-BAT6V1BJ battery for junction battery cable.

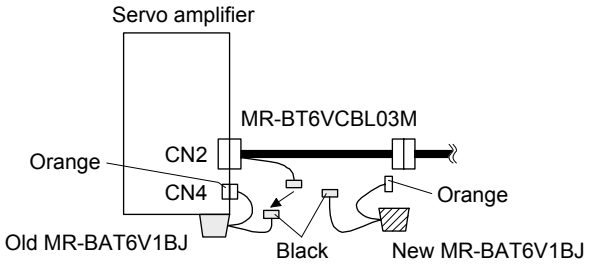

2) Connect the connector for branch cable connection (black) of the new MR-BAT6V1BJ battery for junction battery cable.

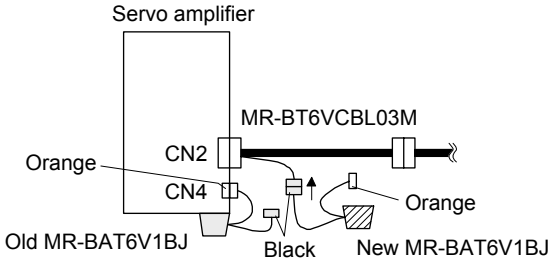

3) Disconnect the connector for servo amplifier connection (orange) of the old MR-BAT6V1BJ battery for junction battery cable.
When the control circuit power supply is on, performing 3) without [AL. 9F.1 Low battery] will trigger [AL. 9F.1].

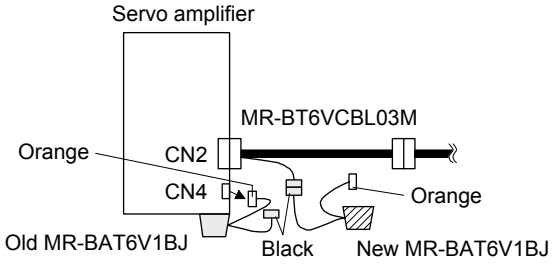

4) Remove the old MR-BAT6V1BJ battery and mount new MR-BAT6V1BJ battery.
When the control circuit power supply is on, [AL. 9F.1] will occur after 3).

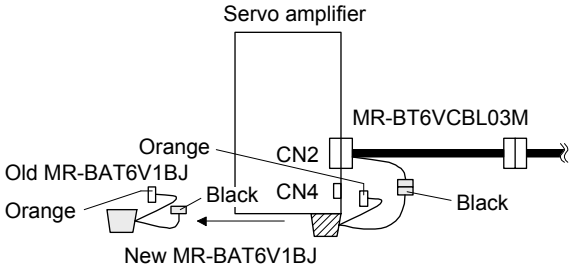

5) Connect the connector for servo amplifier connection (orange) of the new MR-BAT6V1BJ battery for junction battery cable.
When the control circuit power supply is on, [AL. 9F.1] will be canceled.

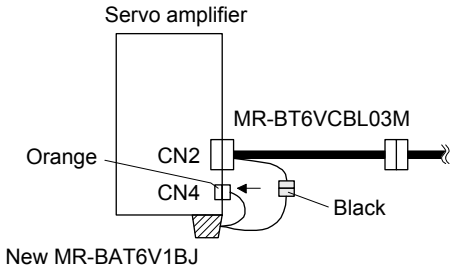

13. USING STO FUNCTION

POINT
●In the torque control mode, the forced stop deceleration function is not available.

13.1 Introduction

This section provides the cautions of the STO function.

13.1.1 Summary

This servo amplifier complies with the following safety standards.

- ISO/EN ISO 13849-1 category 3 PL d
- IEC 61508 SIL 2
- IEC/EN 61800-5-2 SIL 2

13.1.2 Terms related to safety

The STO function shuts down energy to servo motors, thus removing torque. This function electronically cuts off power supply in the servo amplifier.
The purpose of this function is as follows.

(1) Uncontrolled stop according to stop category 0 of IEC/EN 60204-1

(2) Preventing unexpected start-up

13.1.3 Cautions

The following basic safety notes must be read carefully and fully in order to prevent injury to persons or damage to property.
Only qualified personnel are authorized to install, start-up, repair, or service the machines in which these components are installed.
They must be familiar with all applicable local regulations and laws in which machines with these components are installed, particularly the standards mentioned in this manual.
The staff responsible for this work must be given express permission from the company to perform start-up, programming, configuration, and maintenance of the machine in accordance with the safety standards.

⚠WARNING	●Improper installation of the safety related components or systems may cause improper operation in which safety is not assured, and may result in severe injuries or even death.

Protective Measures

- This servo amplifier satisfies the Safe Torque Off (STO) function described in IEC/EN 61800-5-2 by preventing the energy supply from the servo amplifier to the servo motor. If an external force acts upon the drive axis, additional safety measures, such as brakes or counterbalances must be used.

13.1.4 Residual risks of the STO function

Machine manufacturers are responsible for all risk evaluations and all associated residual risks. Below are residual risks associated with the STO function. Mitsubishi is not liable for any damages or injuries caused by these risks.

(1) The STO function disables energy supply to the servo motor by electrical shut-off. The function does not mechanically disconnect electricity from the motor. Therefore, it cannot prevent exposure to electric shock. To prevent an electric shock, install a magnetic contactor or a molded-case circuit breaker to the main circuit power supply (L1, L2, and L3) of the servo amplifier.

(2) The STO function disables energy supply to the servo motor by electrical shut-off. It does not guarantee the stop control or the deceleration control of the servo motor.

(3) For proper installation, wiring, and adjustment, thoroughly read the manual of each individual safety related component.

(4) In the safety circuit, use components that are confirmed safe or meet the required safety standards.

(5) The STO function does not guarantee that the drive part of the servo motor will not rotate due to external or other forces.

(6) Safety is not assured until safety-related components of the system are completely installed or adjusted.

(7) When replacing this servo amplifier, confirm that the model name of servo amplifiers are exactly the same as those being replaced. Once installed, make sure to verify the performance of the functions before commissioning the system.

(8) Perform all risk assessments to the machine or the whole system.

(9) To prevent accumulation of malfunctions, perform malfunction checks at regular intervals based on the risk assessments of the machine or the system. Regardless of the system safety level, malfunction checks should be performed at least once per year.

(10) If the upper and lower power module in the servo amplifier are shorted and damaged simultaneously, the servo motor may make a half revolution at a maximum. For a linear servo motor, the primary side will move a distance of pole pitch.

(11) The STO input signals (STO1 and STO2) must be supplied from one power source. Otherwise, the STO function may not function properly due to a sneak current, failing to bring the STO shut-off state.

(12) For the STO I/O signals of the STO function, supply power by using a safety extra low voltage (SELV) power supply with the reinforced insulation.

13.1.5 Specifications

(1) Specifications

Item	Specifications
Functional safety	STO (IEC/EN 61800-5-2)
Safety performance	ISO/EN ISO 13849-1 category 3 PL d, IEC 61508 SIL 2, EN 62061 SIL CL2, EN 61800-5-2 SIL 2
Mean time to dangerous failure (MTTFd)	100 years or more (Note)
Diagnostic converge (DC)	medium (90% to 99%) (Note)
Average probability of dangerous failures per hour (PFH) [1/h]	1.68×10^{-10}
Number of on/off times of STO	1,000,000 times
CE marking	LVD: EN 61800-5-1 EMC: EN 61800-3 MD: EN ISO 13849-1, EN 61800-5-2, EN 62061

Note. This is the value required by safety standards.

(2) Function block diagram (STO function)

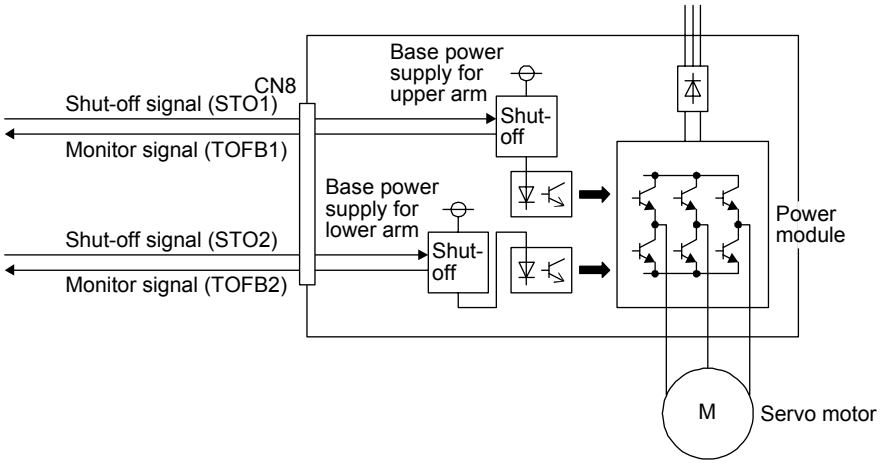

(3) Operation sequence (STO function)

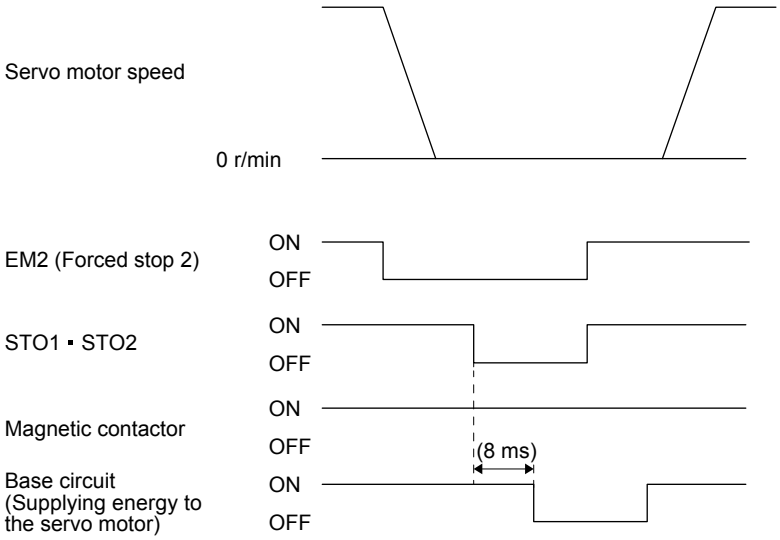

13.1.6 Maintenance

This servo amplifier has alarms and warnings for maintenance that supports the Mitsubishi drive safety function. (Refer to chapter 8.)

13.2 STO I/O signal connector (CN8) and signal layouts

13.2.1 Signal layouts

POINT
●The pin configurations of the connectors are as viewed from the cable connector wiring section.

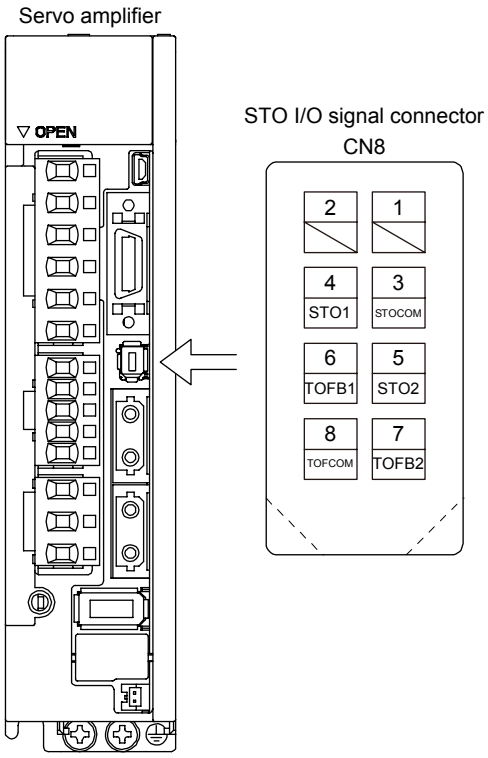

13.2.2 Signal (device) explanations

(1) I/O device

Signal name	Connector pin No.	Description	I/O division
STOCOM	CN8-3	Common terminal for input signal of STO1 and STO2	DI-1
STO1	CN8-4	Inputs STO state 1. STO state (base shut-off): Open between STO1 and STOCOM. STO release state (in driving): Close between STO1 and STOCOM. Be sure to turn off STO1 after the servo motor stops by the servo-off state or with forced stop deceleration by turning off EM2 (Forced stop 2).	DI-1
STO2	CN8-5	Inputs STO state 2. STO state (base shut-off): Open between STO2 and STOCOM. STO release state (in driving): Close between STO2 and STOCOM. Be sure to turn off STO2 after the servo motor stops by the servo-off state or with forced stop deceleration by turning off EM2 (Forced stop 2).	DI-1
TOFCOM	CN8-8	Common terminal for monitor output signal in STO state	DO-1
TOFB1	CN8-6	Monitor output signal in STO1 state STO state (base shut-off): Between TOFB1 and TOFCOM is closed. STO release state (in driving): Between TOFB1 and TOFCOM is opened.	DO-1
TOFB2	CN8-7	Monitor output signal in STO2 state STO state (base shut-off): Between TOFB2 and TOFCOM is closed. STO release state (in driving): Between TOFB2 and TOFCOM is opened.	DO-1

(2) Signals and STO state

The following table shows the TOFB and STO states when the power is on in normal state and STO1 and STO2 are on (closed) or off (opened).

Input signal		State		
STO1	STO2	Between TOFB1 and TOFCOM (Monitoring STO1 state)	Between TOFB2 and TOFCOM (Monitoring STO2 state)	Between TOFB1 and TOFB2 (Monitoring STO state of servo amplifier)
Off	Off	On: STO state (base circuit shut-off)	On: STO state (base circuit shut-off)	On: STO state (base circuit shut-off)
Off	On	On: STO state (base circuit shut-off)	Off: STO release state	Off: STO state (base circuit shut-off)
On	Off	Off: STO release state	On: STO state (base circuit shut-off)	Off: STO state (base circuit shut-off)
On	On	Off: STO release state	Off: STO release state	Off: STO release state

(3) Test pulse of STO input signal

Set the test pulse off time inputted from outside to 1 ms or less.

13.2.3 How to pull out the STO cable

The following shows how to pull out the STO cable from the CN8 connector of the servo amplifier.

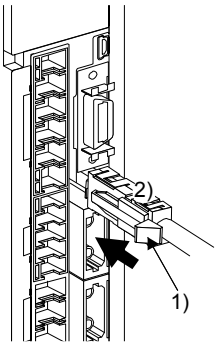

While pressing knob 1) of the STO cable plug in the direction of the arrow, pull out the plug 2).

13.3 Connection example

POINT

- Turn off STO (STO1 and STO2) after the servo motor stops by the servo off state or with forced stop deceleration by turning off EM2 (Forced stop 2). Configure an external sequence that has the timings shown as below using an external device such as the MR-J3-D05 safety logic unit.

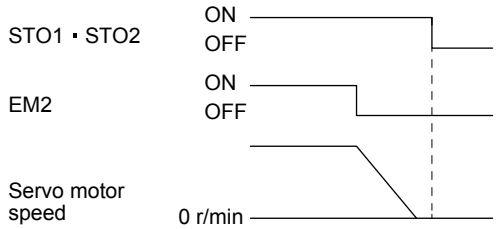

- If STO is turned off during operation, the servo motor is in dynamic brake stop (stop category 0), and [AL.63 STO timing error] will occur.

13.3.1 Connection example for CN8 connector

This servo amplifier is equipped with the connector (CN8) in accordance with the STO function. When this connector is used with a certified external safety relay, power to the motor can be safely removed and unexpected restart can be prevented. The safety relay used should meet the applicable safety standards and have forcibly guided or mirror contacts for the purpose of error detection.
In addition, the MR-J3-D05 safety logic unit can be used instead of a safety relay for implementation of various safety standards. Refer to Appendix 5 for details.
The following diagram is for source interface. For sink interface, refer to section 13.4.1.

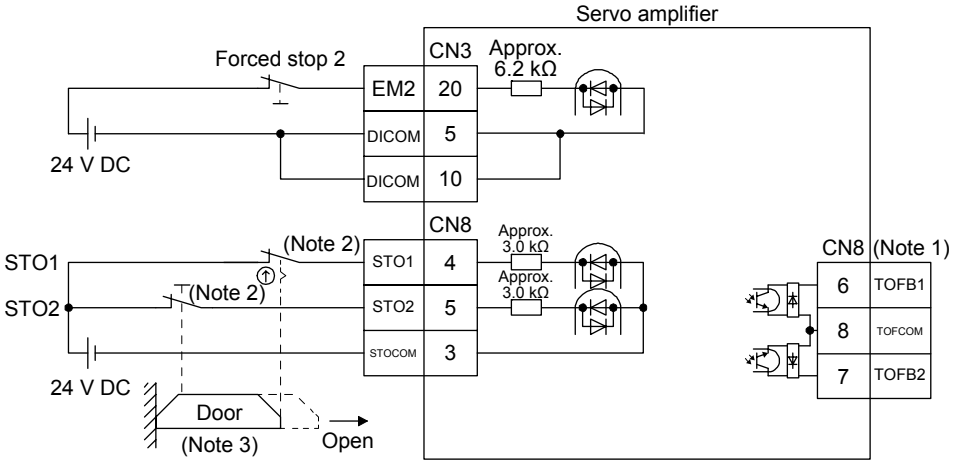

Note 1. By using TOFB, whether the servo is in the STO state can be confirmed. For connection examples, refer to section 13.3.2 to 13.3.4.
2. When using the STO function, turn off STO1 and STO2 at the same time. Turn off STO1 and STO2 after the servo motor stops by the servo off state or with forced stop deceleration by turning off EM2 (Forced stop 2).
3. Configure the interlock circuit so that the door is open after the servo motor is stopped.

13.3.2 External I/O signal connection example using an MR-J3-D05 safety logic unit

POINT
●This connection is for source interface. For the other I/O signals, refer to the connection examples in section 3.2.2.

(1) Connection example

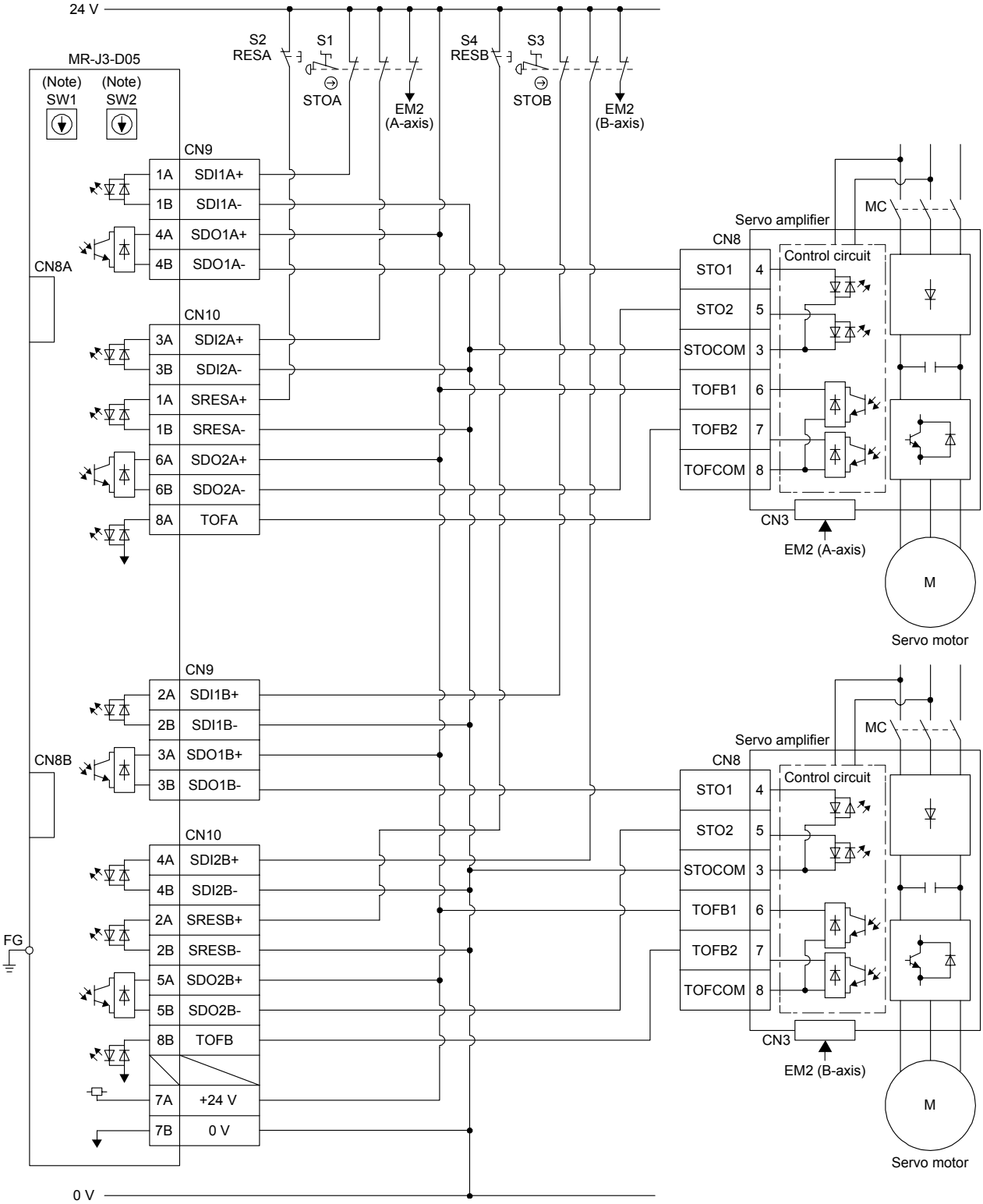

(2) Basic operation example

The switch status of STOA is input to SDI2A+ of MR-J3-D05, and then it will be input to STO1 and STO2 of the servo amplifier via SDO1A and SDO2A of MR-J3-D05.

The switch status of STOB is input to SDI2B+ of MR-J3-D05, and then it will be input to STO1 and STO2 of the servo amplifier via SDO1B and SDO2B of MR-J3-D05.

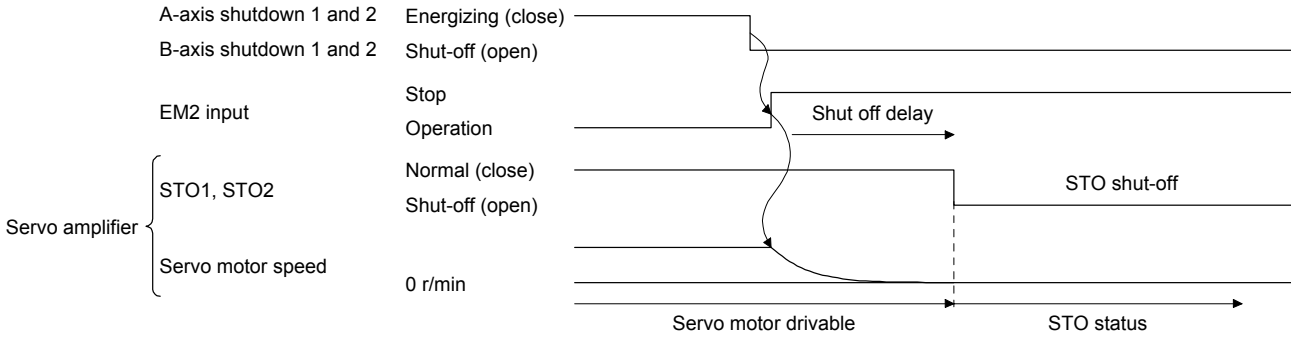

13.3.3 External I/O signal connection example using an external safety relay unit

POINT
●This connection is for source interface. For the other I/O signals, refer to the connection examples in section 3.2.2.

This connection example complies with the requirement of ISO/EN ISO 13849-1 category 3 PL d.
For details, refer to the safety relay module user's manual.

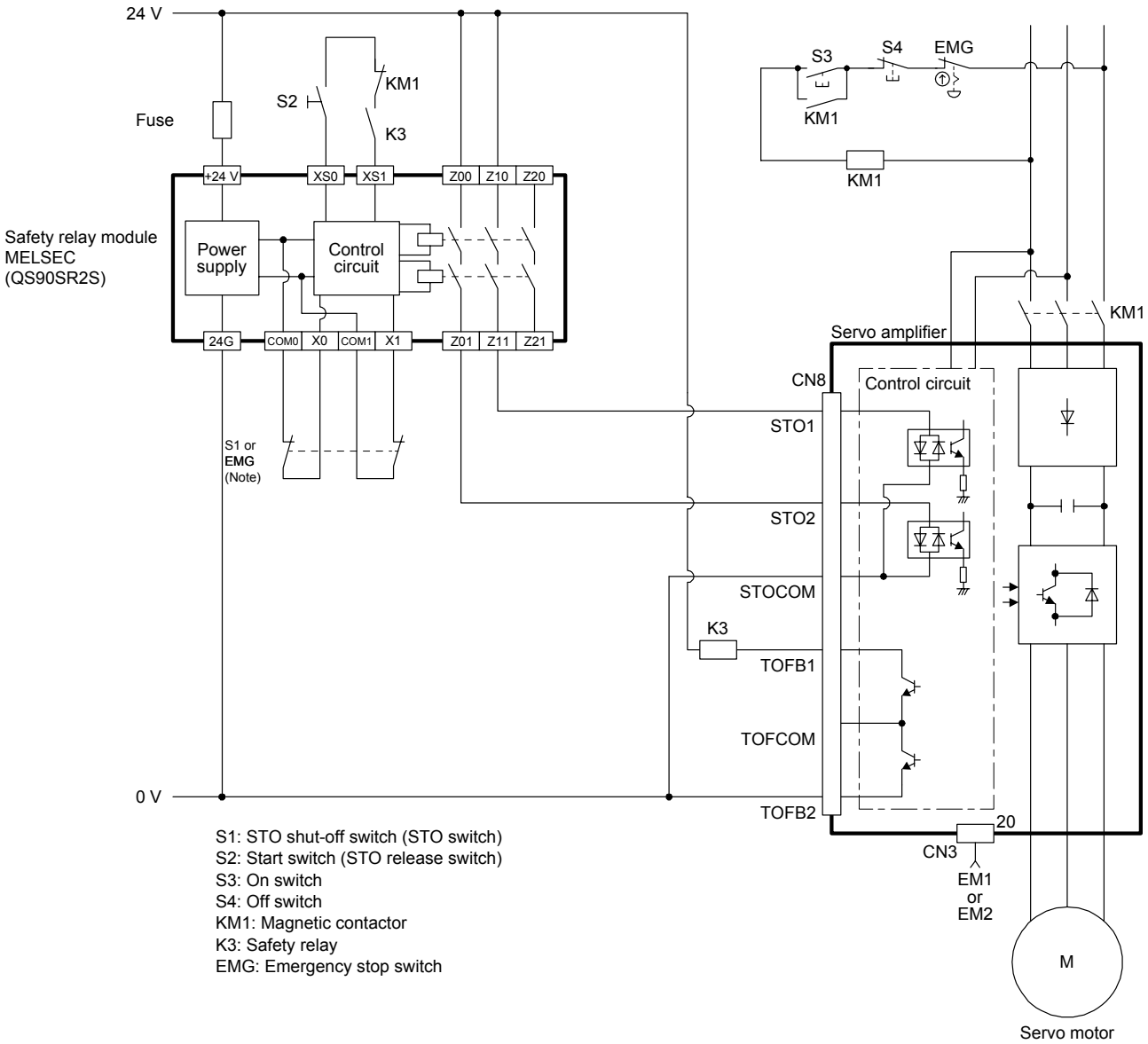

Note. To enable the STO function of the servo amplifier by using "Emergency switching off", change S1 to EMG. The stop category at this time is "0". If STO is turned off while the servo motor is rotating, [AL. 63 STO timing error] will occur.

13.3.4 External I/O signal connection example using a motion controller

POINT
●This connection is for source interface. For the other I/O signals, refer to the connection examples in section 3.2.2. ●For MC-Y0B and PC-Y0B, design a sequence program to output MC-Y0B and PC-Y0B after the servo motor stops.

This connection diagram is an example of STO circuit configured with a servo amplifier and motion controller. Use the switch that complies with the requirement of ISO/EN ISO 13849-1 category 3 PL d as an emergency stop switch. This connection example complies with the requirement of ISO/EN ISO 13849-1 category 3 PL d. The following shows an example of I/O (X and Y) signal assignment of the motion controller safety signal module. For details, refer to the motion controller user's manual.

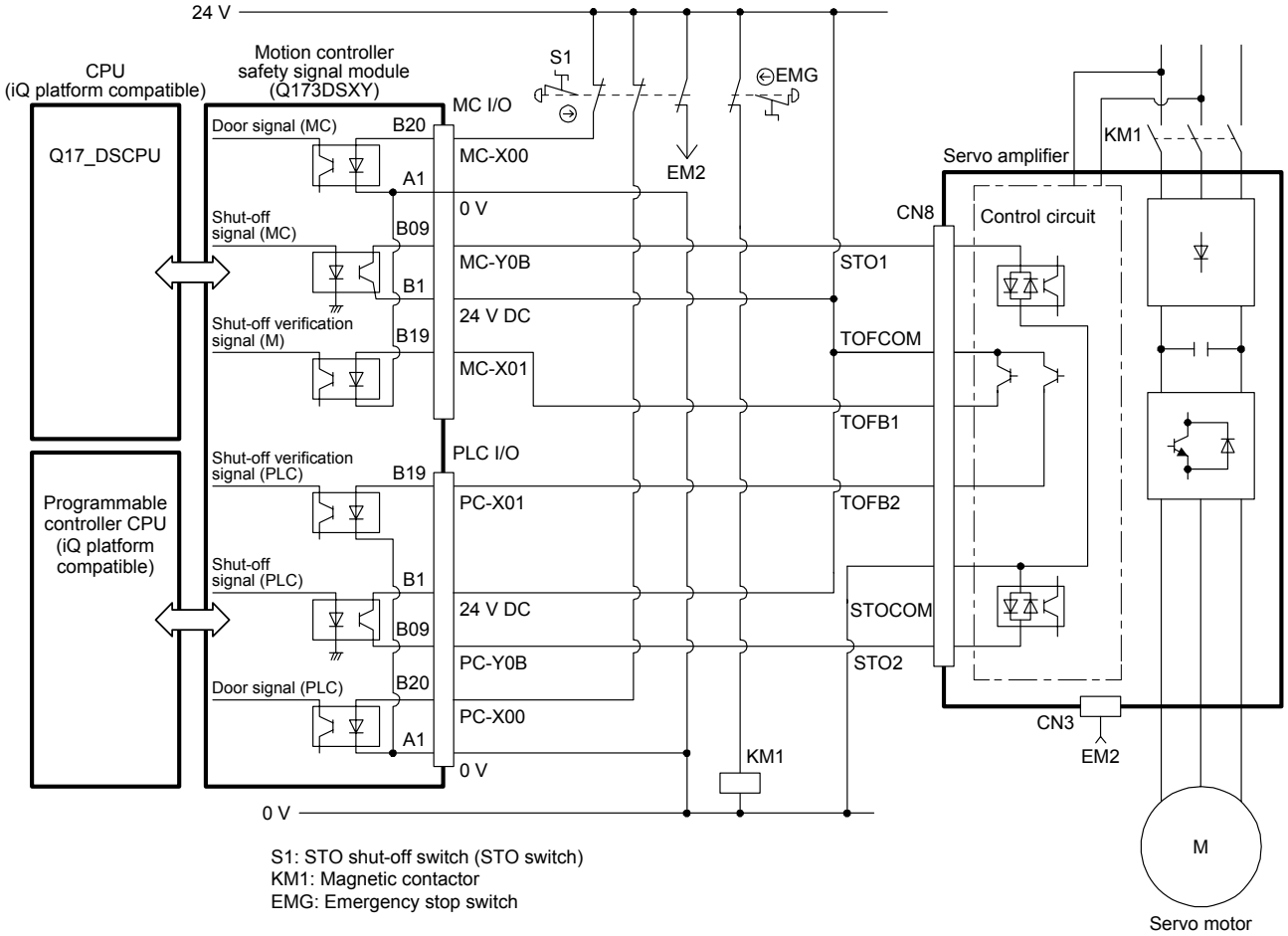

13.4 Detailed description of interfaces

This section provides the details of the I/O signal interfaces (refer to the I/O division in the table) given in section 13.2. Refer to this section and make connection with the external device.

13.4.1 Sink I/O interface

(1) Digital input interface DI-1
This is an input circuit whose photocoupler cathode side is input terminal. Transmit signals from sink (open-collector) type transistor output, relay switch, etc.

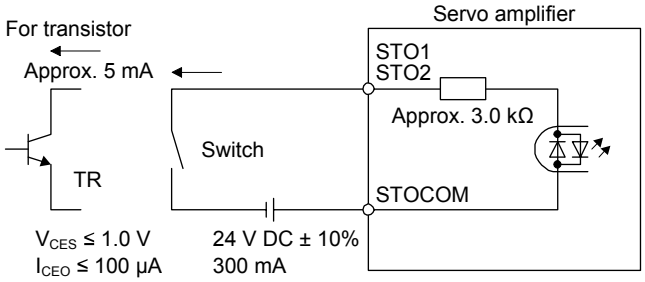

(2) Digital output interface DO-1
This is a circuit of collector output terminal of the output transistor. When the output transistor is turned on, collector terminal current will be applied for the output.
A lamp, relay or photocoupler can be driven. Install a diode (D) for an inductive load, or install an inrush current suppressing resistor (R) for a lamp load.
(Rated current: 40 mA or less, maximum current: 50 mA or less, inrush current: 100 mA or less) A maximum of 5.2 V voltage drop occurs in the servo amplifier.

(a) When outputting two STO states by using each TOFB

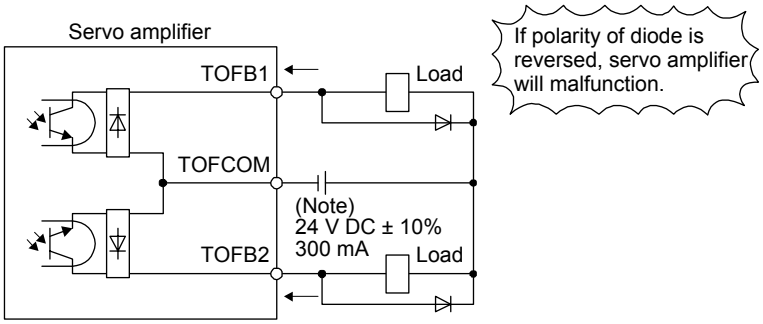

Note. If the voltage drop (maximum of 2.6 V) interferes with the relay operation, apply high voltage (maximum of 26.4 V) from external source.

(b) When outputting two STO states by using one TOFB

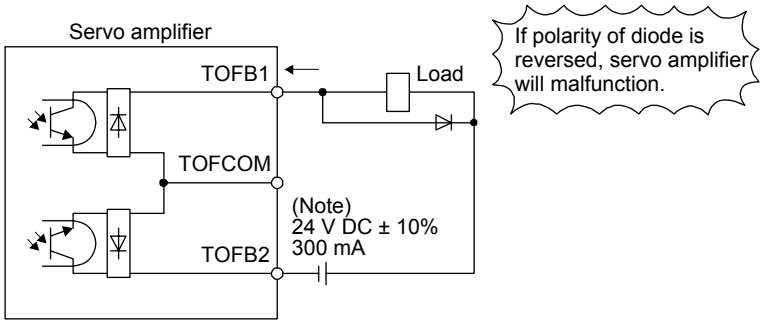

Note. If the voltage drop (maximum of 5.2 V) interferes with the relay operation, apply high voltage (maximum of 26.4 V) from external source.

13.4.2 Source I/O interface

In this servo amplifier, source type I/O interfaces can be used.

(1) Digital input interface DI-1
This is an input circuit whose photocoupler anode side is input terminal. Transmit signals from source (open-collector) type transistor output, relay switch, etc.

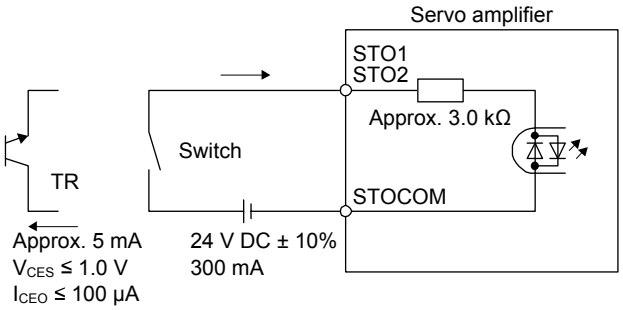

(2) Digital output interface DO-1
This is a circuit of emitter output terminal of the output transistor. When the output transistor is turned on, current will be applied from the output to a load.
A maximum of 5.2 V voltage drop occurs in the servo amplifier.

(a) When outputting two STO states by using each TOFB

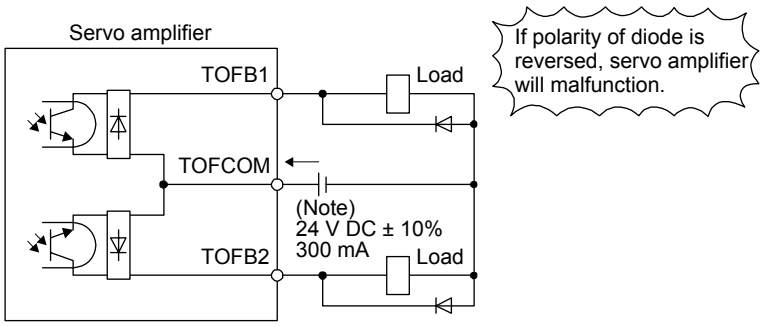

Note. If the voltage drop (maximum of 2.6 V) interferes with the relay operation, apply high voltage (maximum of 26.4 V) from external source.

(b) When outputting two STO states by using one TOFB

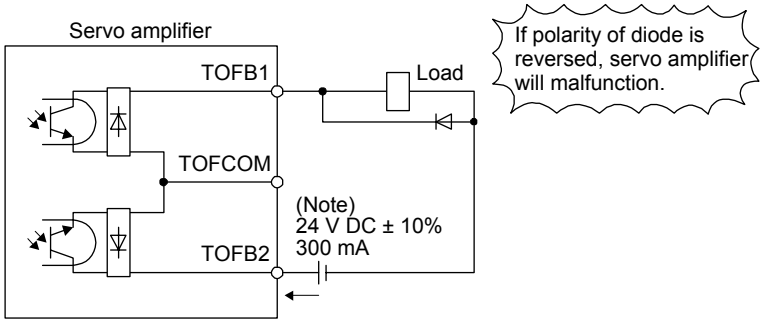

Note. If the voltage drop (maximum of 5.2 V) interferes with the relay operation, apply high voltage (maximum of 26.4 V) from external source.

MEMO

14. USING A LINEAR SERVO MOTOR

⚠WARNING ●When using the linear servo motor, read "Linear Servo Motor Instruction Manual" and "Linear Encoder Instruction Manual".

14.1 Functions and configuration

14.1.1 Summary

The fields of semiconductor/LCD manufacturing systems, mounters, and others have strong demands for high accuracy, high speed, and efficiency. Therefore, the number of systems using a linear servo motor for a drive axis has been increasing. Since the linear servo system can obtain the characteristics of the high speed and the high acceleration/deceleration greater than the ball screw drive system. The linear servo system also does not have a ball screw wear which is a weak point in the ball screw drive system. This will extend the life of the equipment. In addition, since a response error due to backlash and friction does not occur, you can establish a high-accuracy system.
The following shows the differences between the linear servo motor and the rotary servo motor.

Category	Item		Differences		Remarks
			Linear servo motor	Rotary servo motor	
External I/O signal	FLS (Upper stroke limit), RLS (Lower stroke limit)		Required (for magnetic pole detection)	Not required	Automatically turns on in the parameter setting.
Motor pole adjustment	Magnetic pole detection		Required	Not required (default setting)	Automatically executed at the first servo-on after the power is turned on. For the absolute position linear encoder, [Pr. PL01] can disable the magnetic pole detection. The timing of the magnetic pole detection can be changed with [Pr. PL01]. (Refer to (2) (b) of section 14.3.3.)
Home position return	Reference home position		1048576 pulses unit (initial value)	One servo motor revolution unit	Home position return pitch can be changed with parameter setting. (Refer to section 14.3.3)
Absolute position detection system	Absolute position encoder battery		Not required	Required	The following alarms and warnings are not provided for the linear servo motor. ・[AL. 25 Absolute position erased] ・[AL. 92 Battery cable disconnection warning] ・[AL. 9F Battery warning] ・[AL. E3 Absolute position counter warning]
Auto tuning	Load to motor inertia ratio (J)		Load to motor mass ratio	Load to motor inertia ratio	
MR Configurator2 (SW1DNC-MRC2-E) (Software version 1.19V or later)	Motor speed (Data display and setting)		mm/s unit	r/min unit	
	Test operation function	Positioning operation	Supported	Supported	
		Motor-less operation	None	Supported	
		JOG operation	None	Supported	
		Program operation	Supported	Supported	

14.1.2 Servo system with auxiliary equipment

⚠CAUTION ●Connecting a linear servo motor for different axis to the U, V, W, or CN2 may cause a malfunction.

POINT

●Equipment other than the servo amplifier and linear servo motor are optional or recommended products.

●When using the linear servo motor, set [Pr. PA01] to "_ _ 4 _".

(1) MR-J4-_B_

The following configuration diagram shows an example for using a linear servo motor with MR-J4-10B.

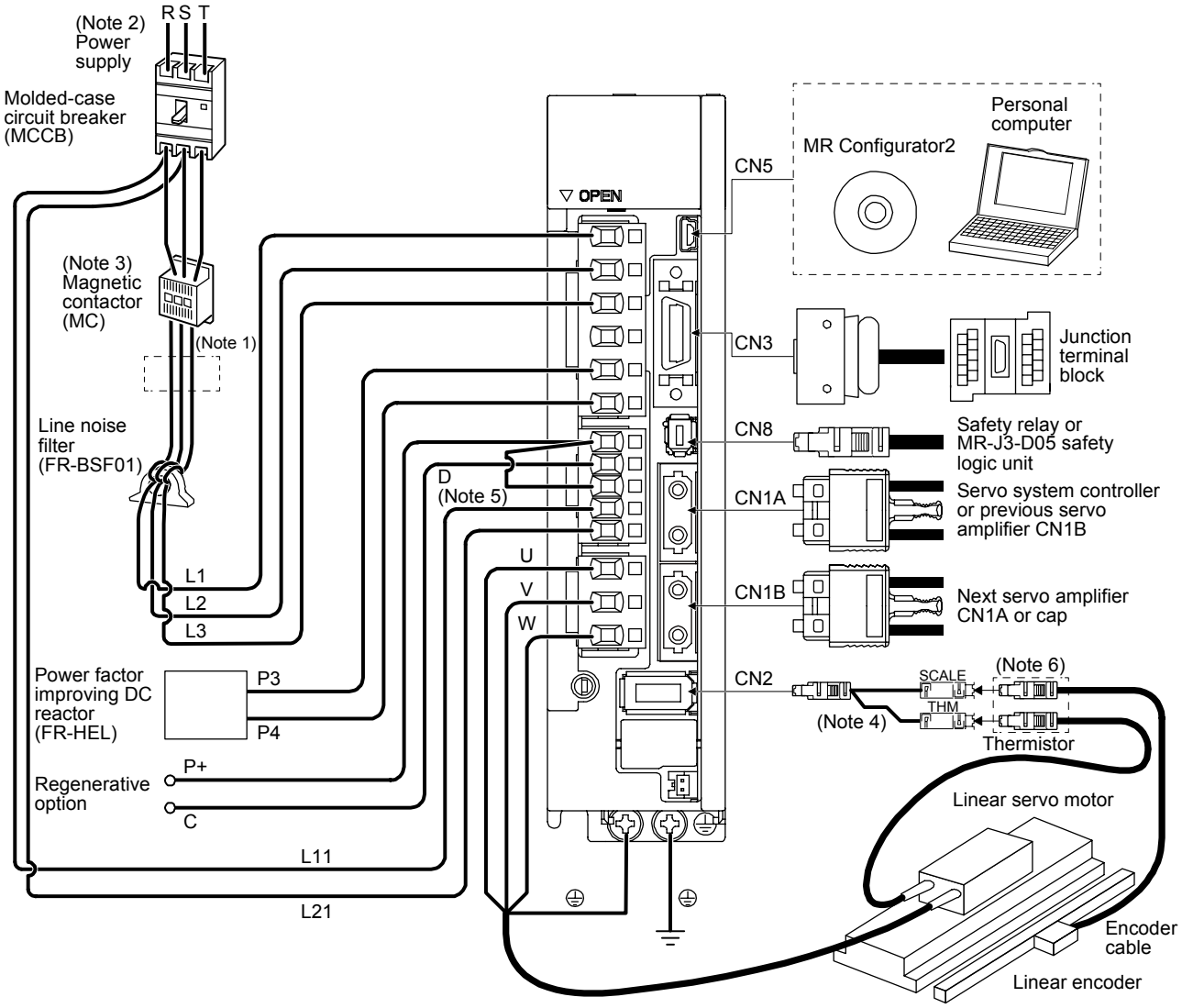

Note 1. The power factor improving AC reactor can also be used. In this case, the power factor improving DC reactor cannot be used. When not using the power factor improving DC reactor, short P3 and P4.
2. A 1-phase 200 V AC to 240 V AC power supply may be used with the servo amplifier of MR-J4-70B(-RJ) or less. For 1-phase 200 V AC to 240 V AC, connect the power supply to L1 and L3. Leave L2 open. For power supply specifications, refer to section 1.3.
3. Depending on the main circuit voltage and operation pattern, bus voltage decreases, and that may cause the forced stop deceleration to shift to the dynamic brake deceleration. When dynamic brake deceleration is not required, slow the time to turn off the magnetic contactor.
4. For the branch cable, use the MR-J4THCBL03M (optional).
5. Always connect between P+ and D terminals. When using the regenerative option, refer to section 11.2.
6. Connect the thermistor to THM of branch cable and connect the encoder cable to SCALE correctly. Incorrect setting will trigger [AL. 16].

(2) When using serial linear encoder with MR-J4-_B_-RJ

The following configuration diagram shows an example for using a linear servo motor with MR-J4-10B-RJ.

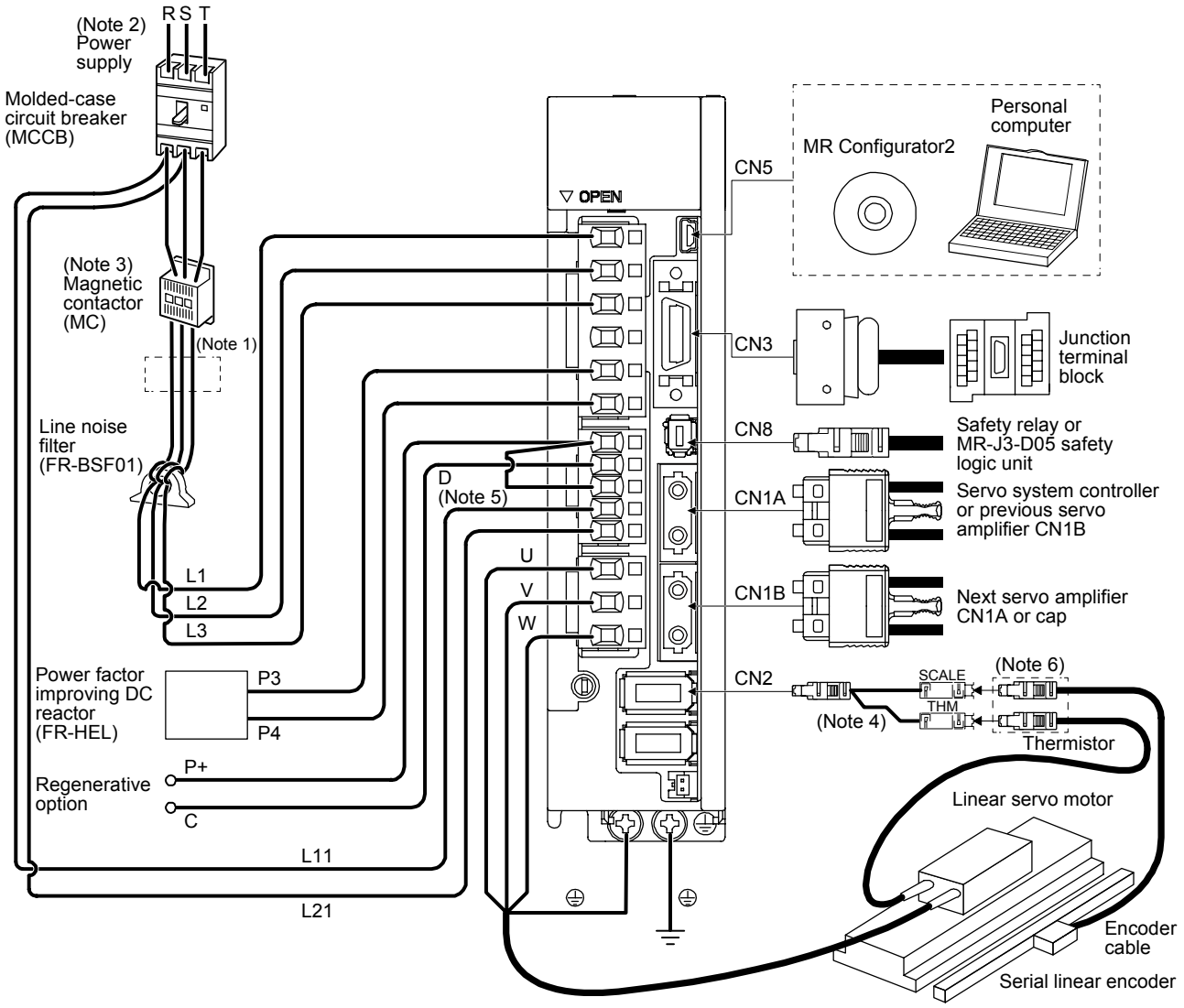

Note 1. The power factor improving AC reactor can also be used. In this case, the power factor improving DC reactor cannot be used. When not using the power factor improving DC reactor, short P3 and P4.

2. A 1-phase 200 V AC to 240 V AC power supply may be used with the servo amplifier of MR-J4-70B(-RJ) or less. For 1-phase 200 V AC to 240 V AC, connect the power supply to L1 and L3. Leave L2 open. For power supply specifications, refer to section 1.3.

3. Depending on the main circuit voltage and operation pattern, bus voltage decreases, and that may cause the forced stop deceleration to shift to the dynamic brake deceleration. When dynamic brake deceleration is not required, slow the time to turn off the magnetic contactor.

4. For the branch cable, use the MR-J4THCBL03M (optional).

5. Always connect between P+ and D terminals. When using the regenerative option, refer to section 11.2.

6. Connect the thermistor to THM of branch cable and connect the encoder cable to SCALE correctly. Incorrect setting will trigger [AL. 16].

(3) When using A/B/Z-phase differential output linear encoder with MR-J4-_B_-RJ

The following configuration diagram shows an example for using a linear servo motor with MR-J4-10B-RJ.

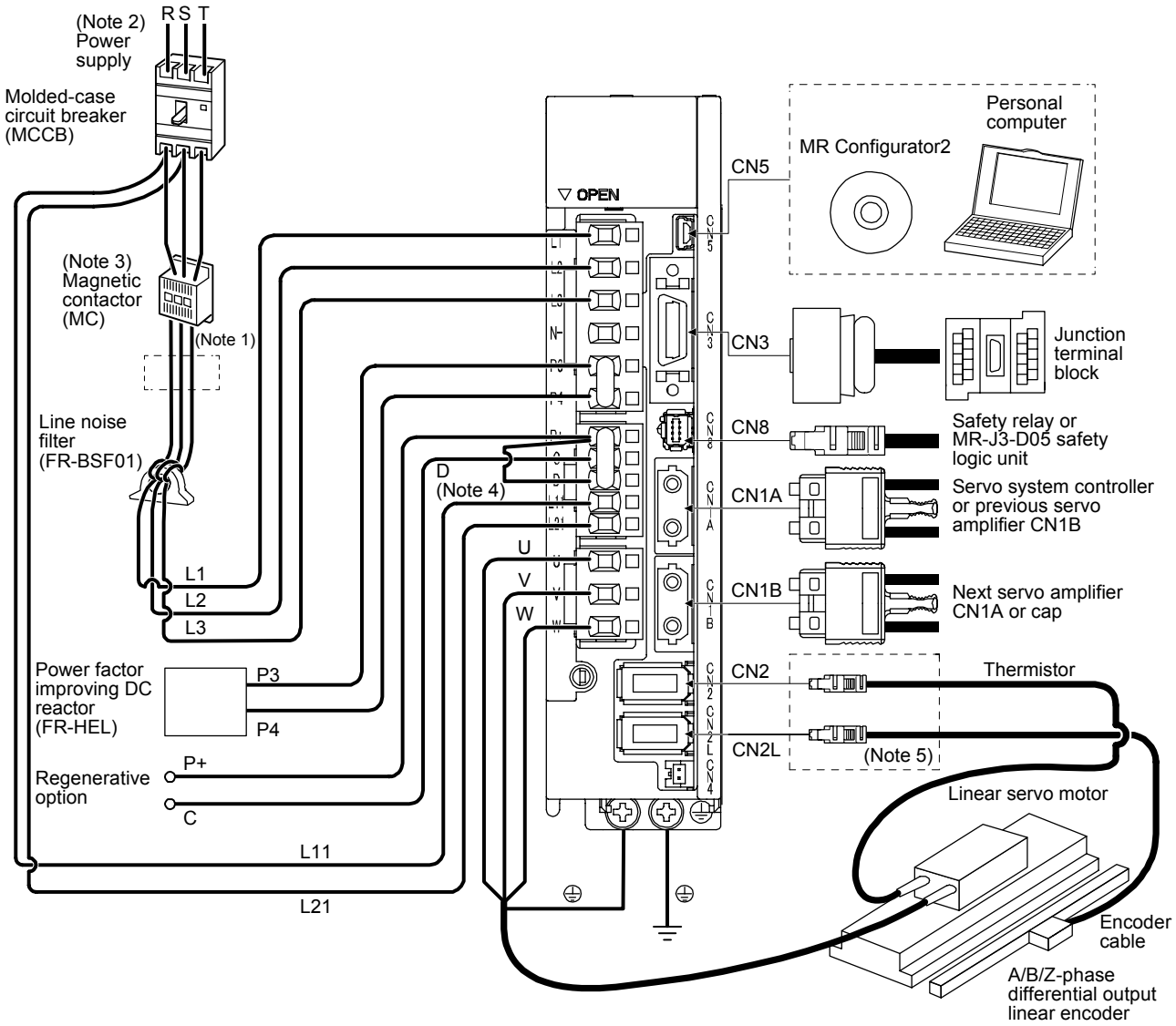

Note 1. The power factor improving AC reactor can also be used. In this case, the power factor improving DC reactor cannot be used. When not using the power factor improving DC reactor, short P3 and P4.

2. A 1-phase 200 V AC to 240 V AC power supply may be used with the servo amplifier of MR-J4-70B(-RJ) or less. For 1-phase 200 V AC to 240 V AC, connect the power supply to L1 and L3. Leave L2 open. For the power supply specifications, refer to section 1.3.

3. Depending on the main circuit voltage and operation pattern, bus voltage decreases, and that may cause the forced stop deceleration to shift to the dynamic brake deceleration. When dynamic brake deceleration is not required, slow the time to turn off the magnetic contactor.

4. Always connect between P+ and D terminals. When using the regenerative option, refer to section 11.2.

5. Connect the thermistor to CN2 of servo amplifier and connect the encoder cable to CN2L correctly. Incorrect setting will trigger [AL. 16].

14.2 Signals and wiring

⚠WARNING

- Any person who is involved in wiring should be fully competent to do the work.
- Before wiring, turn off the power and wait for 15 minutes or more until the charge lamp turns off. Then, confirm that the voltage between P+ and N- is safe with a voltage tester and others. Otherwise, an electric shock may occur. In addition, when confirming whether the charge lamp is off or not, always confirm it from the front of the servo amplifier.
- Ground the servo amplifier and the linear servo motor securely.
- Do not attempt to wire the servo amplifier and the linear servo motor until they have been installed. Otherwise, it may cause an electric shock.
- The cables should not be damaged, stressed, loaded, or pinched. Otherwise, it may cause an electric shock.
- To avoid an electric shock, insulate the connections of the power supply terminals.

⚠CAUTION

- Wire the equipment correctly and securely. Otherwise, the linear servo motor may operate unexpectedly, resulting in injury.
- Connect cables to the correct terminals. Otherwise, a burst, damage, etc. may occur.
- Ensure that polarity (+/-) is correct. Otherwise, a burst, damage, etc. may occur.
- The surge absorbing diode installed to the DC relay for control output should be fitted in the specified direction. Otherwise, the emergency stop and other protective circuits may not operate.

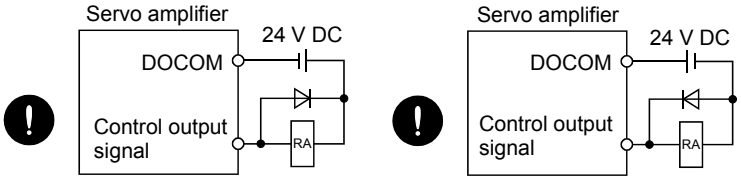

For sink output interface　　For source output interface

- Use a noise filter, etc. to minimize the influence of electromagnetic interference. Electromagnetic interference may be given to the electronic equipment used near the servo amplifier.
- Do not install a power capacitor, surge killer or radio noise filter (optional FR-BIF-(H)) with the power wire of the linear servo motor.
- When using the regenerative resistor, switch power off with the alarm signal. Otherwise, a transistor fault or the like may overheat the regenerative resistor, causing a fire.
- Connect the servo amplifier power output (U, V, and W) to the linear servo motor power input (U, V, and W) directly. Do not let a magnetic contactor, etc. intervene. Otherwise, it may cause a malfunction.

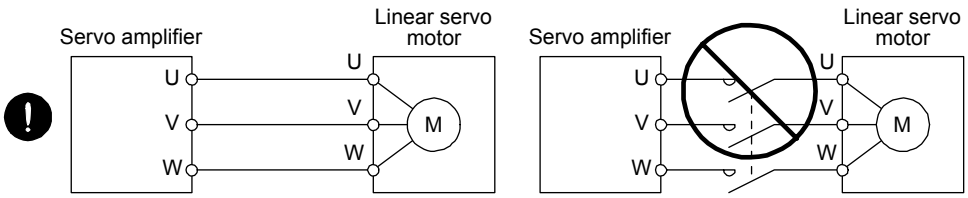

⚠CAUTION

- Connecting a linear servo motor for different axis to the U, V, W, or CN2 may cause a malfunction.
- Do not modify the equipment.
- The cables such as power wires deriving from the primary side cannot stand the long-term bending action. Avoid the bending action by fixing the cables to the moving part, etc. Also, use the cable that stands the long-term bending action for the wiring to the servo amplifier.

This chapter does not describe the following items. For details of the items, refer to each section of the detailed description field.

Item	Detailed explanations
Input power supply circuit	Section 3.1
Explanation of power supply system	Section 3.3
Signal (device) explanations	Section 3.5
Alarm occurrence timing chart	Section 3.7
Interfaces	Section 3.8
SSCNET III cable connection	Section 3.9
Grounding	Section 3.11
Switch setting and display of the servo amplifier	Section 4.3

14.3 Operation and functions

14.3.1 Startup

POINT
●When using the linear servo motor, set [Pr. PA01] to "_ _ 4 _".

(1) Startup procedure

Start up the linear servo in the following procedure.

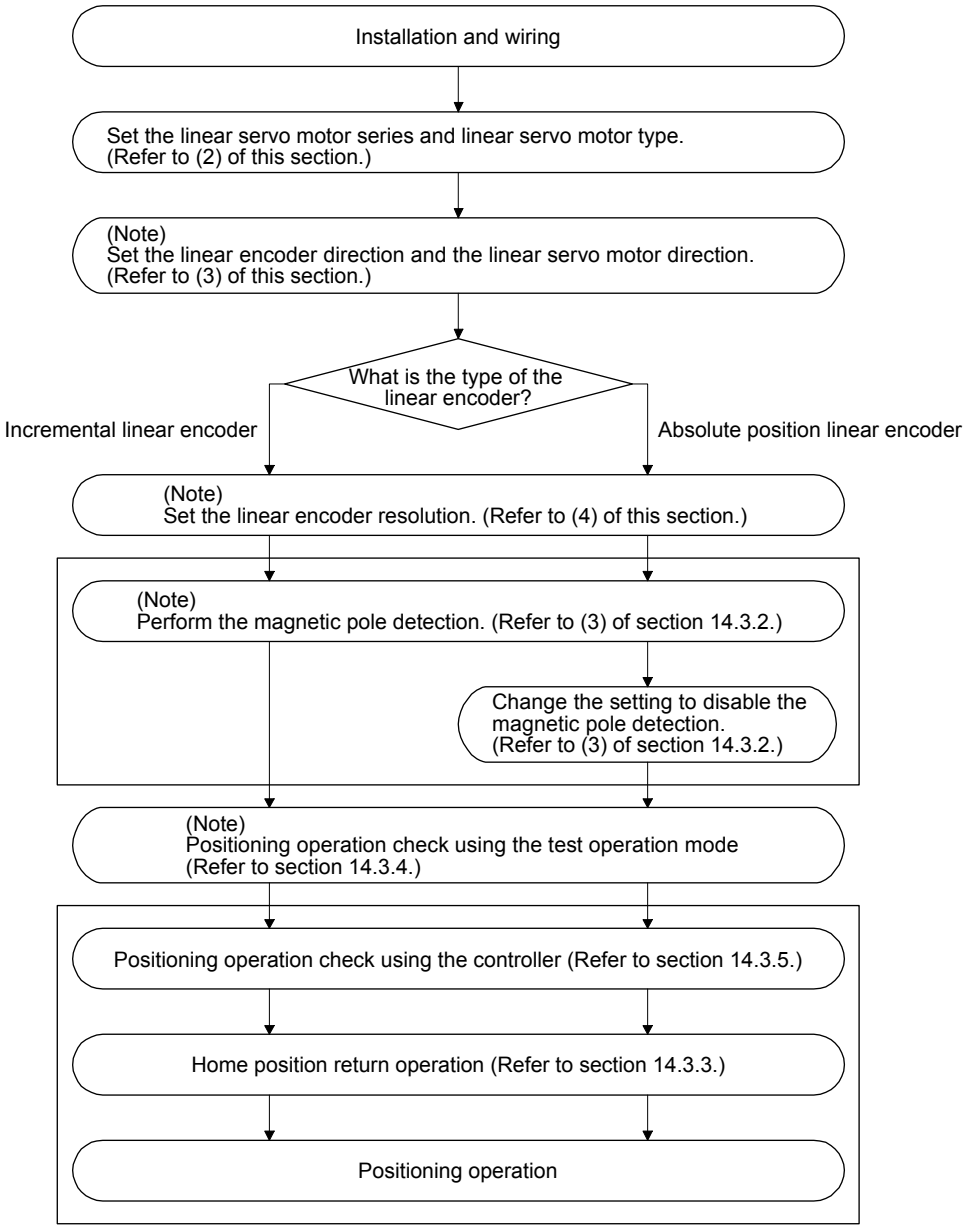

Note. Use MR Configurator2.

(2) Set the linear servo motor series and linear servo motor type.

To use the linear servo motor, set the linear servo motor series and linear servo motor type with [Pr. PA17 Servo motor series setting] and [Pr. PA18 Servo motor type setting]. (Refer to section 5.2.1.)

(3) Settings of the linear encoder direction and the linear servo motor direction
Set the first digit of [Pr. PC27] (Encoder pulse count polarity selection) so that the positive direction of the linear servo motor matches with the increasing direction of the linear encoder feedback.

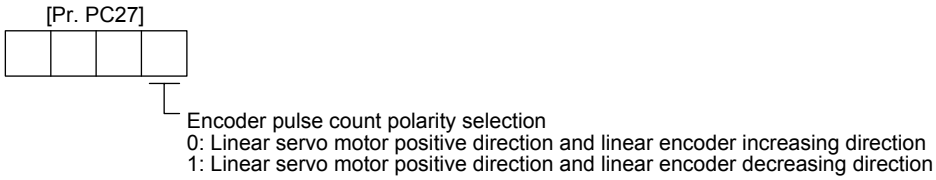

(a) Parameter setting method

1) Confirm the positive direction of the linear servo motor. [Pr. PA14] determines the relation of the travel direction of the linear servo motor under commands as shown below.

[Pr. PA14] setting	Travel direction of linear servo motor	
	Address increasing command	Address decreasing command
0	Positive direction	Negative direction
1	Negative direction	Positive direction

The positive/negative directions of the linear servo motor are as follows.

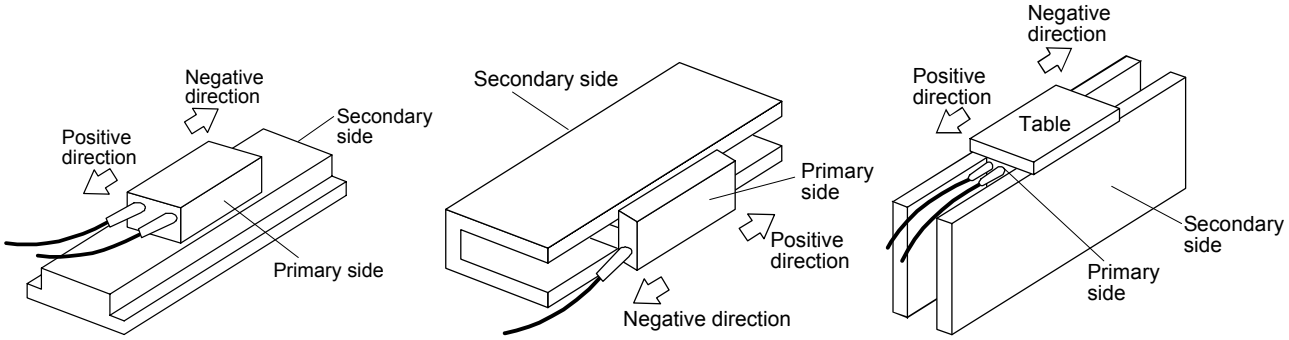

LM-H3 and LM-F series LM-U2 series LM-K2 series

2) Confirm the increasing direction of the linear encoder.

3) If the positive direction of the linear servo motor matches with the increasing direction of the linear encoder, set [Pr. PC27] to "_ _ _ 0". If the positive direction of the linear servo motor does not match with the increasing direction of the linear encoder, set [Pr. PC27] to "_ _ _ 1".

(b) Confirmation method
Confirm the positive direction of the linear servo motor and the increasing direction of the linear encoder in the following procedure.

1) In servo-off status, move the linear servo motor in the positive direction manually.

2) Confirm the motor speed (in the positive and negative directions) at that time with MR Configurator2.

3) When [Pr. PC27] is set to "_ _ _ 0" and the positive direction of the linear servo motor matches with the increasing direction of the linear encoder, if the linear servo motor operates in the positive direction, the motor speed will be a positive value. If the positive direction of the linear servo motor does not match with the increasing direction of the linear encoder, the motor speed will be a negative value. When [Pr. PC27] is set to "_ _ _ 1" and the positive direction of the linear servo motor matches with the increasing direction of the linear encoder, if the linear servo motor operates in the positive direction, the motor speed will be a negative value.

(4) Linear encoder resolution setting

Set the ratio of the electronic gear to the linear encoder resolution with [Pr. PL02 Linear encoder resolution - Numerator] and [Pr. PL03 Linear encoder resolution - Denominator].

> POINT
>
> ●To enable the parameter value, cycle the power after setting.

(a) Parameter setting

Set the values that apply to the following equation.

$$\frac{\text{[Pr. PL02 Linear encoder resolution - Numerator]}}{\text{[Pr. PL03 Linear encoder resolution - Denominator]}} = \text{Linear encoder resolution [μm]}$$

(b) Parameter setting example

When the linear encoder resolution is 0.5 μm

$$\frac{\text{[Pr. PL02]}}{\text{[Pr. PL03]}} = \text{Linear encoder resolution} = 0.5\ \mu\text{m} = \frac{1}{2}$$

The following shows the simplified chart for the setting values of [Pr. PL02] and [Pr. PL03].

		Linear encoder resolution [μm]							
		0.01	0.02	0.05	0.1	0.2	0.5	1.0	2.0
Setting value	[Pr. PL02]	1	1	1	1	1	1	1	2
	[Pr. PL03]	100	50	20	10	5	2	1	1

> POINT
>
> ●If an incorrect value is set for [Pr. PL02] or [Pr. PL03], the linear servo motor may not operate properly, or [AL. 27] or [AL. 42] may occur at the positioning operation or the magnetic pole detection.

14.3.2 Magnetic pole detection

Before the positioning operation of the linear servo motor, make sure to perform the magnetic pole detection. When [Pr. PL01] is set to the initial value, perform the magnetic pole detection only at the first servo-on after the power is turned on.

The magnetic pole detection includes the following two methods. Each method has advantages and disadvantages. Select a magnetic pole detection method suitable for your usage.
The position detection method is selected in the initial setting.

Magnetic pole detection	Advantage	Disadvantage
Position detection method	1. The magnetic pole detection has a high degree of accuracy. 2. The adjustment procedure at the magnetic pole detection is simple.	1. The travel distance at the magnetic pole detection is large. 2. For equipment with small friction, the initial magnetic pole detection error may occur.
Minute position detection method	1. The travel distance at the magnetic pole detection is small. 2. Even for equipment with small friction, the magnetic pole detection is available.	1. The adjustment procedure at the magnetic pole detection is complex. 2. If a disturbance occurs during the magnetic pole detection, [AL. 27 Initial magnetic pole detection error] may occur.

(1) Magnetic pole detection method by using MR Configurator2

The following shows the magnetic pole detection procedure by using MR Configurator2.

(a) Magnetic pole detection by the position detection method

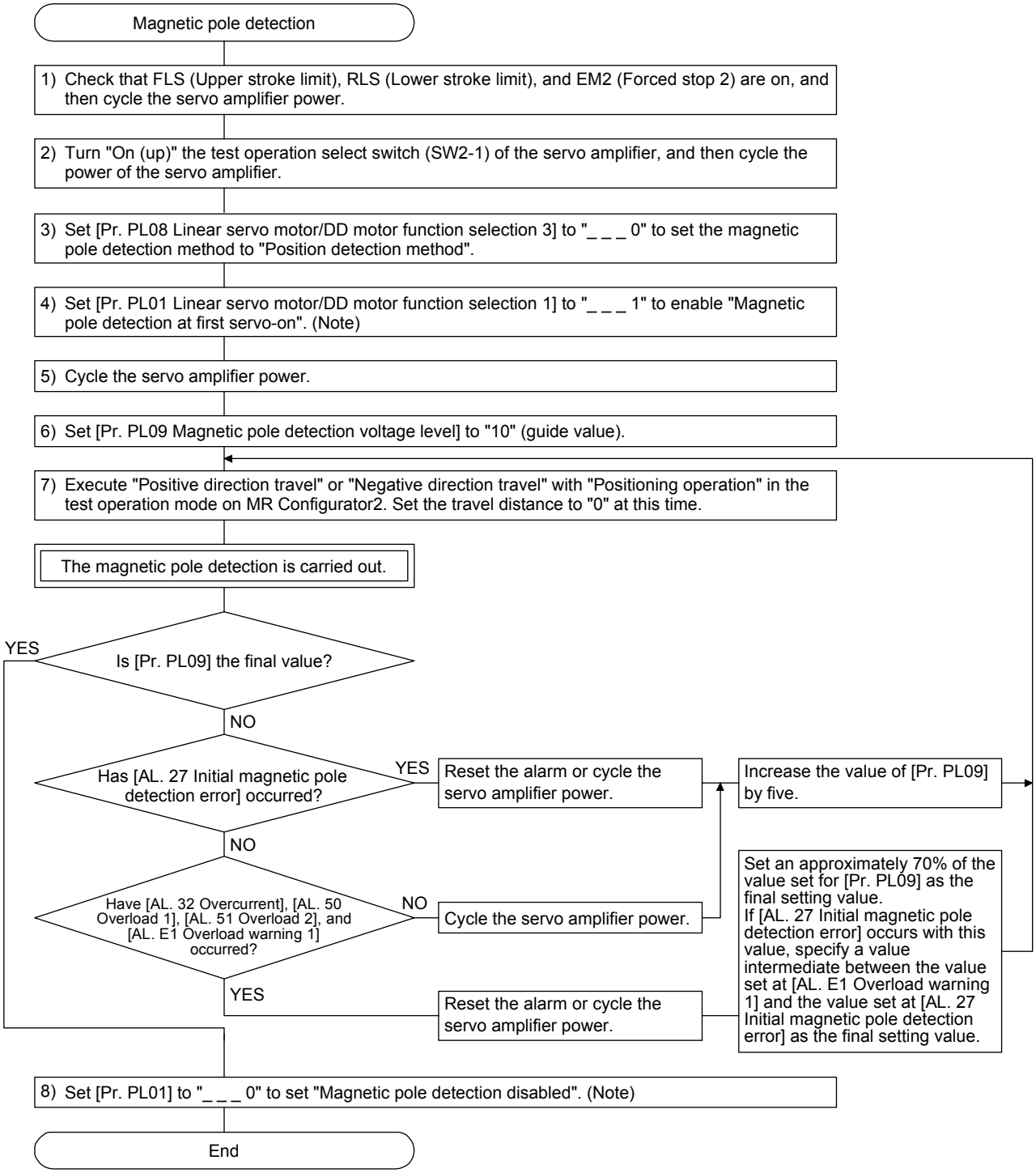

Note. For the incremental system, the [Pr. PL01] setting is not required.

(b) Magnetic pole detection by the minute position detection method

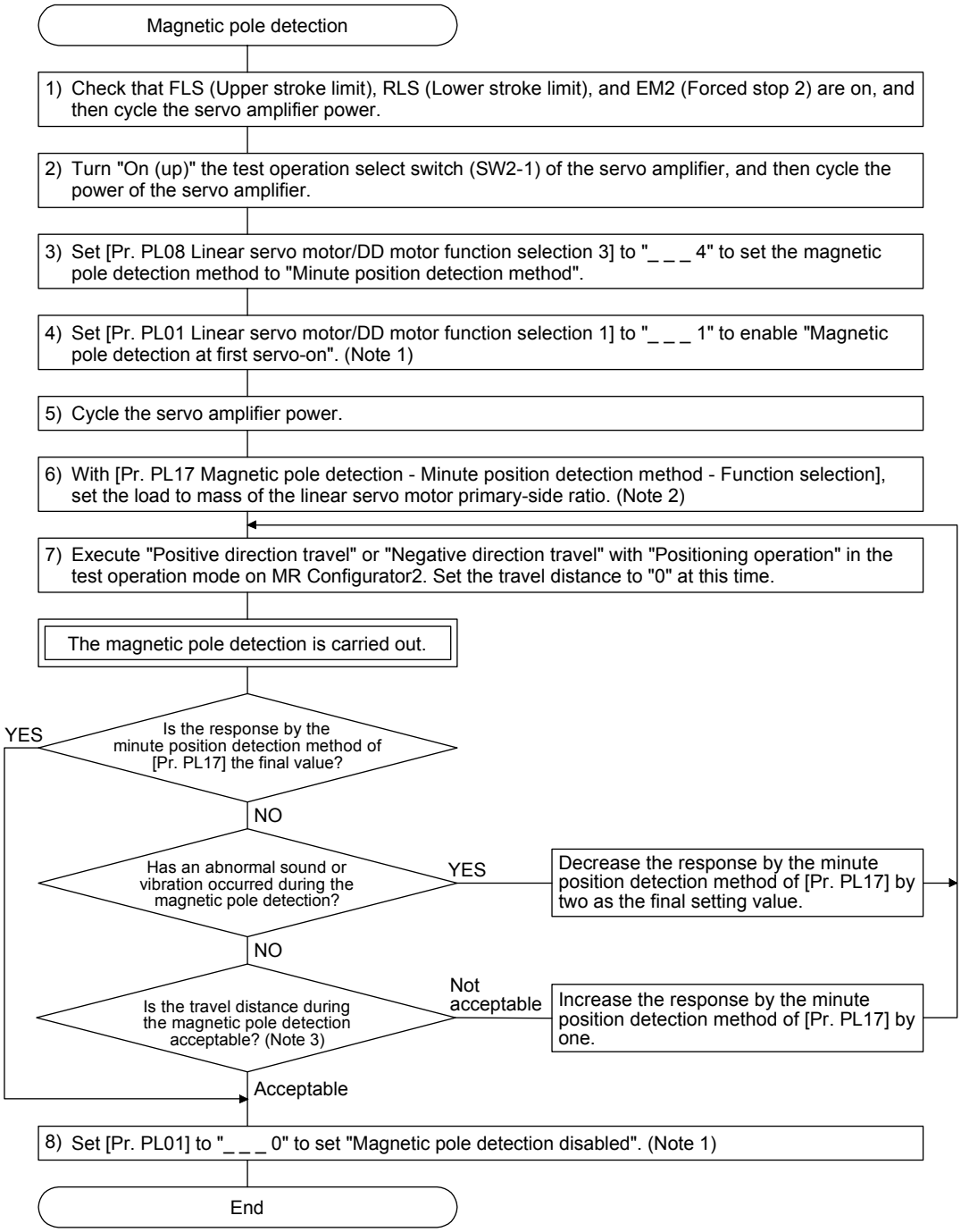

Note 1. When the linear encoder is an incremental type, the [Pr. PL01] setting is not required.
2. If the load to primary-side linear servo motor mass ratio is unknown, perform the magnetic pole detection by the position detection method, and then perform the auto tuning to set an estimated value.
3. For the magnetic pole detection by the minute position detection method, the maximum travel distance at the magnetic pole detection must be 0.5 mm or less. To shorten the travel distance, increase the response by the minute position detection method in [Pr. PL17].

(c) State transition of the servo amplifier display (3-digit, 7-segment LED) at the magnetic pole detection
When the magnetic pole detection with MR Configurator2 is normally executed, the servo amplifier display (3-digit, 7-segment LED) shows the state as below.

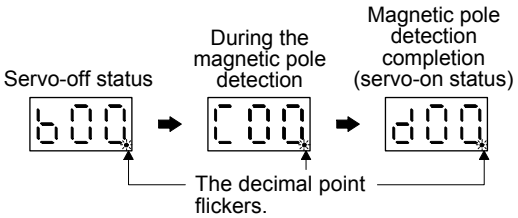

(2) Preparation for the magnetic pole detection

POINT
●When the test operation mode is selected with the test operation select switch (SW2-1), the SSCNET III/H communication for the servo amplifier in the test operation mode and the following servo amplifiers is blocked.

For the magnetic pole detection, use the test operation mode (positioning operation) of MR Configurator2. Turn off the servo amplifier power, and set the test operation select switch (SW2-1) as shown below. Turning on the power enables the test operation mode.

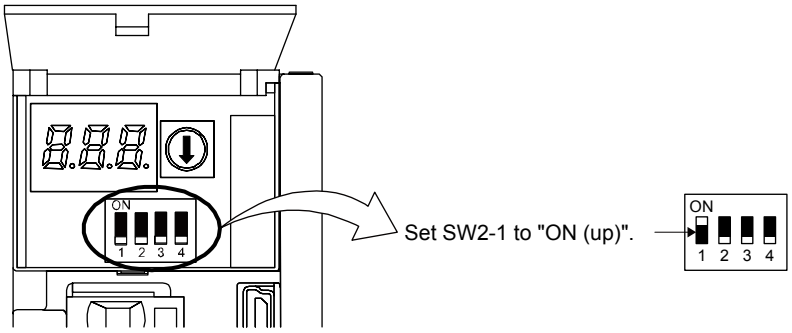

(3) Operation at the magnetic pole detection

⚠WARNING ●Note that the magnetic pole detection automatically starts simultaneously with the turning-on of the servo-on command.

⚠CAUTION ●If the magnetic pole detection is not executed properly, the linear servo motor may operates unexpectedly.

POINT

●Establish the machine configuration using FLS (Upper stroke limit) and RLS (Lower stroke limit). Otherwise, the machine may be damaged due to a collision.
●At the magnetic pole detection, whether the linear servo motor moves in the positive or negative direction is unpredictable.
●Depending on the setting value of [Pr. PL09 Magnetic pole detection voltage level], an overload, overcurrent, magnetic pole detection alarm, or others may occur.
●When performing the positioning operation from a controller, use the sequence which confirms the normal completion of the magnetic pole detection and the servo-on status, then outputs the positioning command. If the controller outputs the positioning command before RD (Ready) turns on, the command may not be accepted or a servo alarm may occur.
●After the magnetic pole detection, check the positioning accuracy with the test operation (positioning operation function) of MR Configurator2.
●When the absolute position linear encoder is used, if a gap is generated to the positional relation between the linear encoder and the linear servo motor, perform the magnetic pole detection again.
●The accuracy of the magnetic pole detection improves with no load.
●A servo alarm may occur when the linear encoder is not mounted properly, or when the linear encoder resolution setting ([Pr. PL02] and [Pr. PL03]) or the setting value of [Pr. PL09 Magnetic pole detection voltage level] is incorrect.
●For the machine that its friction becomes 30% or more of the continuous thrust, the linear servo motor may not operate properly after the magnetic pole detection.
●For the horizontal shaft of the machine that its unbalanced thrust becomes 20% or more of the continuous thrust, the linear servo motor may not operate properly after the magnetic pole detection.
●For the machine that multiple axes are connected like a tandem configuration, if you try to perform the magnetic pole detection simultaneously for multiple axes, the magnetic pole detection may not be executed. Perform the magnetic pole detection for each axis. At this time, set the axes that the magnetic pole detection is not performed for to servo-off.

(a) For the incremental linear encoder

POINT
●For the incremental linear encoder, the magnetic pole detection is required every time the power is turned on.

By turning on the servo-on command from the controller after the power-on, the magnetic pole detection is automatically carried out. Therefore, there is not need to set the parameter (first digit of [Pr. PL01]) for executing the magnetic pole detection.

1) Timing chart

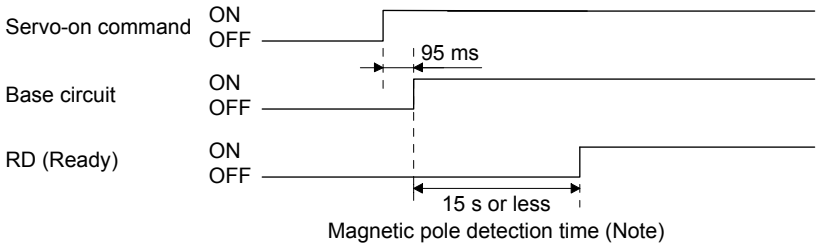

Note. The magnetic pole detection time indicates the operation time when FLS (Upper stroke limit) and RLS (Lower stroke limit) are on.

2) Linear servo motor movement (when FLS (Upper stroke limit) and RLS (Lower stroke limit) are on)

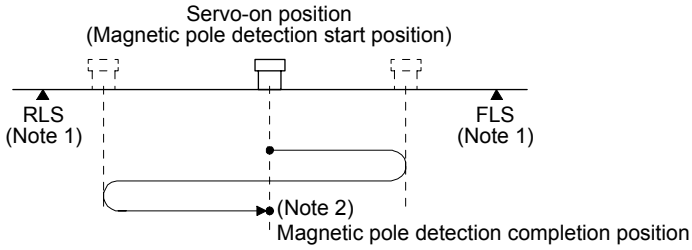

Note 1. When FLS (Upper stroke limit) or RLS (Lower stroke limit) turns off during the magnetic pole detection, the operation of the magnetic pole detection is carried on to the opposite direction. When both FLS and RLS are off, [AL. 27 Initial magnetic pole detection error] occurs.

2. The following shows the pitch against the magnetic pole.

Linear servo motor series	LM-H3 LM-F	LM-U2		LM-K2
		Medium thrust (Continuous thrust: Less than 400 N)	Large thrust (Continuous thrust: 400 N or more)	
Pitch against magnetic pole [mm]	48	30	60	48

3) Linear servo motor movement (when FLS (Upper stroke limit) or RLS (Lower stroke limit) is off)
When FLS or RLS is off at servo-on, the magnetic pole detection is carried out as follows.

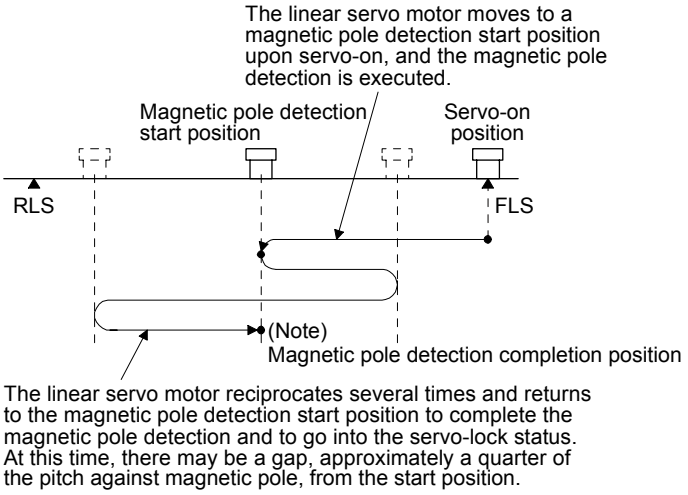

Note. For the pitch against magnetic pole, refer to (3) (a) 2) Note 2 of this section.

(b) For the absolute position linear encoder

POINT
●When you use an absolute position linear encoder with the following timings, the magnetic pole detection will be required. ・When the system is set up (at the first startup of equipment) ・After a servo amplifier is replaced ・After a linear servo motor (primary-side or secondary-side) is replaced ・After a linear encoder (scale or head) is replaced or its position is adjusted ●When the absolute position linear encoder is used, if a gap is generated to the positional relation between the linear encoder and the linear servo motor, perform the magnetic pole detection again.

Perform the magnetic pole detection in the following procedure.

1) Set [Pr. PL01 Linear servo motor/DD motor function selection 1] to "_ _ _ 1" (Magnetic pole detection at first servo-on).

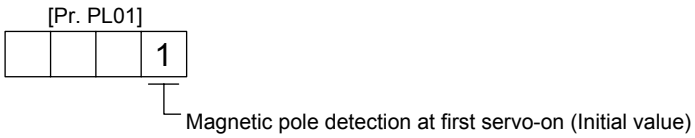

2) Execute the magnetic pole detection. (Refer to (3) (a) 1), 2) of this section.)

3) After the completion of the magnetic pole detection, change [Pr. PL01] to "_ _ _ 0" (Magnetic pole detection disabled).

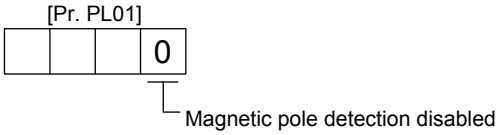

After the magnetic pole detection, by disabling the magnetic pole detection function with [Pr. PL01], the magnetic pole detection after each power-on is not required.

(4) Magnetic pole detection method setting

POINT

●In the following cases, set the magnetic pole detection method to the minute position detection method.
- When a shorten travel distance at the magnetic pole detection is required
- When the magnetic pole detection by the position detection method is not completed

Set the magnetic pole detection method using the first digit of [Pr. PL08] (Magnetic pole detection method selection).

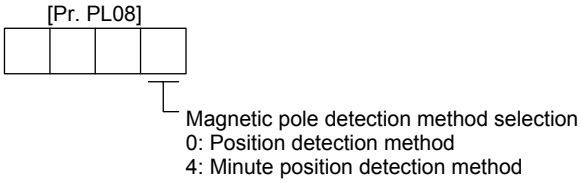

(5) Setting of the magnetic pole detection voltage level by the position detection method
For the magnetic pole detection by the position detection method, set the voltage level with [Pr. PL09 Magnetic pole detection voltage level]. For the magnetic pole detection by the minute position detection method, the voltage level setting is not required.

(a) Guideline of parameter settings
Set the parameters by referring to the following table.

[Pr. PL09] setting (guide value) / Servo status	Small ← Medium → Large (10 or less (initial value) 50 or more)	
Thrust at operation	Small	Large
Overload, overcurrent alarm	Seldom occurs	Frequently occurs
Magnetic pole detection alarm	Frequently occurs	Seldom occurs
Magnetic pole detection accuracy	Low	High

(b) Setting procedure
1) Perform the magnetic pole detection, and increase the setting value of [Pr. PL09 Magnetic pole detection voltage level] until [AL. 50 Overload 1], [AL. 51 Overload 2], [AL. 33 Overvoltage], [AL. E1 Overload warning 1], and [AL. EC Overload warning 2] occur. Increase the setting value by five as a guide value. When these alarms and warnings occur during the magnetic pole detection by using MR Configurator2, the test operation of MR Configurator2 automatically completes and the servo-off status is established.

2) Specify the setting value that is an approximately 70% of the value set when [AL. 50 Overload 1], [AL. 51 Overload 2], [AL. 33 Overvoltage], [AL. E1 Overload warning 1], and [AL. EC Overload warning 2] occurred as the final setting value. However, if [AL. 27 Initial magnetic pole detection error] occurs with this value, specify a value intermediate between the value set at [AL. 50 Overload 1], [AL. 51 Overload 2], [AL. 33 Overvoltage], [AL. E1 Overload warning 1], and [AL. EC Overload warning 2] and the value set at the magnetic pole detection alarm as the final setting value.

3) Perform the magnetic pole detection again with the final setting value to check there is no problem.

(c) Setting example

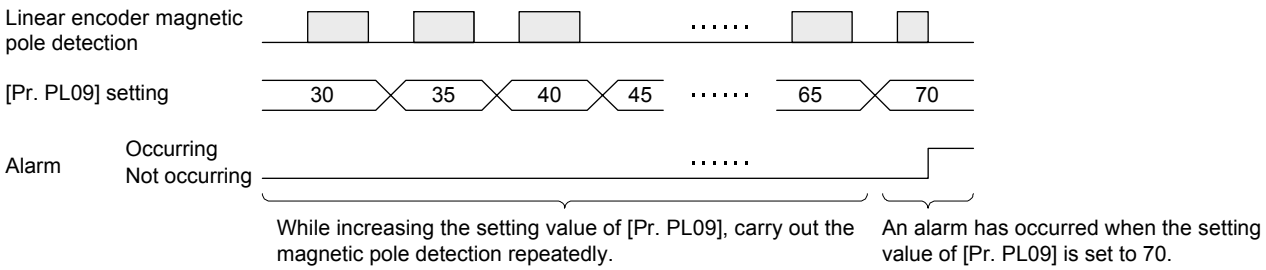

In this example, the final setting value of [Pr. PL09] is 49 (Setting value at the alarm occurrence = 70 × 0.7).

14.3.3 Home position return

> **POINT**
>
> ●The incremental linear encoder and the absolute position linear encoder have different reference home positions at the home position return.

(1) Incremental linear encoder

> **⚠CAUTION**
>
> ●If the resolution or the stop interval (the third digit of [Pr. PL01]) of the linear encoder is large, it is very dangerous since the linear servo motor may crash into the stroke end.

(a) When the linear encoder home position (reference mark) exists in the home position return direction
When an incremental linear encoder is used, the home position is the position per 1048576 pulses (changeable with the third digit of [Pr. PL01]) with reference to the linear encoder home position (reference mark) passed through first after a home position return start. Change the setting value of [Pr. PL01] according to the linear encoder resolution.

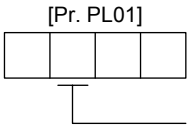

Setting value	Stop interval [pulse]
0	8192
1	131072
2	262144
3	1048576 (initial value)
4	4194304
5	16777216
6	67108864

The following shows the relation between the stop interval at the home position return and the linear encoder resolution. For example, when the linear encoder resolution is 0.001 μm and the parameter for the stop interval at the home position return, [Pr.PL01], is set to "_ 5 _ _" (16777216 pulses), the stop interval is 16.777 mm. The value inside a bold box indicates the recommended stop interval for each linear encoder resolution.

[Unit: mm]

Pr. PL01	Linear encoder resolution [μm] / Stop interval [pulse]	0.001	0.005	0.01	0.02	0.05	0.1	0.2	0.5	1	2
_ 0 _ _	8192	0.008	0.041	0.082	0.164	0.410	0.819	1.638	4.096	8.192	16.384
_ 1 _ _	131072	0.131	0.655	1.311	2.621	6.554	13.107	26.214	65.536	131.072	262.144
_ 2 _ _	262144	0.262	1.311	2.621	5.243	13.107	26.214	52.429	131.072	262.144	524.288
_ 3 _ _	1048576	1.049	5.243	10.486	20.972	52.429	104.858	209.715	524.288	1048.576	2097.152
_ 4 _ _	4194304	4.194	20.972	41.943	83.886	209.715	419.430	838.861	2097.152	4194.304	8388.608
_ 5 _ _	16777216	16.777	83.886	167.772	335.544	838.861	1677.722	3355.443	8388.608	16777.216	33554.432
_ 6 _ _	67108864	67.109	335.544	671.089	1342.177	3355.443	6710.886	13421.773	33554.432	67108.864	134217.728

In the case of a proximity dog type home position return, the nearest reference home position after proximity dog off is the home position.
Set one linear encoder home position in the full stroke, and set it in the position that can always be passed through after a home position return start. LZ (Encoder Z-phase pulse) cannot be used.

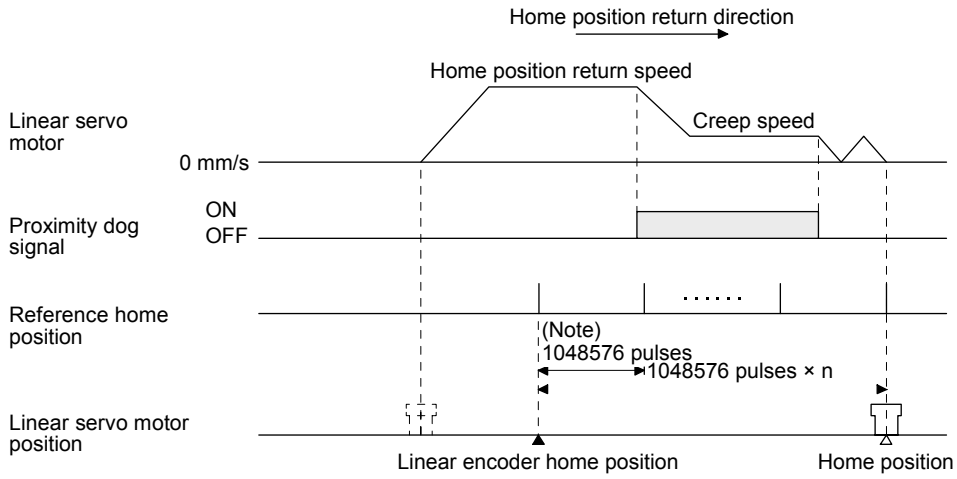

Note. Changeable with [Pr. PL01].

(b) When the linear encoder home position does not exist in the home position return direction
If the home position return is performed from the position where the linear encoder does not exist in the home position return direction, a home position return error occurs on the controller. The error contents differ according to the controller type. Move the linear servo motor to the stroke end on the opposite side of the home position return direction with the JOG operation from the controller and others, and then perform a home position return.

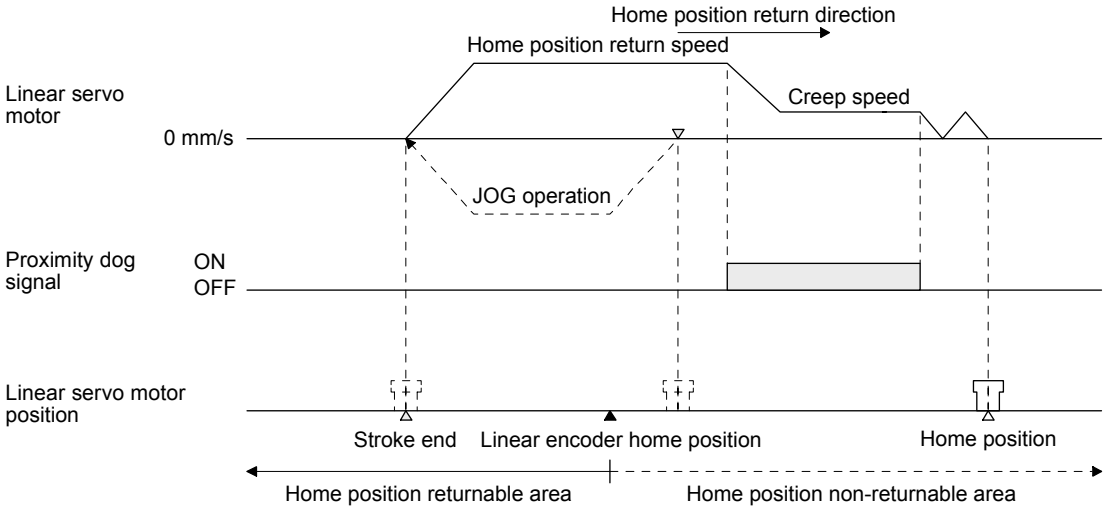

POINT

- To execute a home position return securely, start a home position return after moving the linear servo motor to the opposite stroke end with JOG operation from the controller and others.
- Change the third digit value of [Pr. PL01] according to the linear encoder resolution.

(2) Absolute position linear encoder

When an absolute linear encoder is used, the reference home position is the position per 1048576 pulses (changeable with the third digit of [Pr. PL01]) with reference to the linear encoder home position (absolute position data = 0).

In the case of a proximity dog type home position return, the nearest reference home position after proximity dog off is the home position. The linear encoder home position can be set in any position. LZ (Encoder Z-phase pulse) is outputted based on "Stop interval selection at the home position return" in [Pr. PL01].

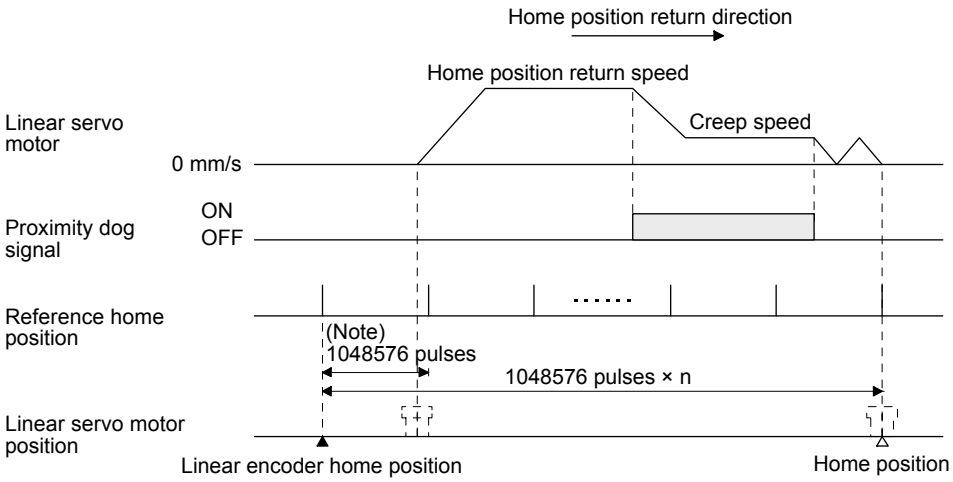

Note. Changeable with [Pr. PL01].

POINT
●The data set type home position return can also be carried out.

14.3.4 Test operation mode in MR Configurator2

⚠CAUTION

- The test operation mode is designed for checking servo operation. It is not for checking machine operation. Do not use this mode with the machine. Always use the linear servo motor alone.
- If the servo motor operates abnormally, use EM2 (Forced stop 2) to stop it.

POINT

- The content described in this section indicates the environment where the servo amplifier and a personal computer are directly connected.
- When the test operation mode is selected with the test operation select switch (SW2-1), the SSCNET III/H communication for the servo amplifier in the test operation mode and the following servo amplifiers is blocked.

By using a personal computer and MR Configurator2, you can execute the positioning operation, the output signal (DO) forced output, and the program operation without connecting the servo system controller.

(1) Test operation mode type

(a) Positioning operation

Positioning operation can be performed without using the servo system controller. Use this operation with the forced stop reset. This operation may be used independently of whether the servo is on or off and whether the servo system controller is connected or not.

Exercise control on the positioning operation screen of MR Configurator2.

1) Operation pattern

Item	Initial value	Setting range
Travel distance [pulse]	1048576	0 to 99999999
Speed [mm/s]	10	0 to Maximum speed
Acceleration/deceleration time constant [ms]	1000	0 to 50000
Repeat pattern	Positive direction travel → Negative direction travel	Positive direction travel → Negative direction travel Positive direction travel → Positive direction travel Negative direction travel → Positive direction travel Negative direction travel → Negative direction travel
Dwell time [s]	2.0	01 to 50.0
Number of repeats [time]	1	1 to 9999

2) Operation method

Operation	Screen control
Positive direction travel	Click the "Positive Direction Movement" button.
Negative direction travel	Click the "Reverse Direction Movement" button.
Pause	Click the "Pause" button.
Stop	Click the "Stop" button.
Forced stop	Click the "Forced stop" button.

(b) Output signal (DO) forced output
Output signals can be switched on/off forcibly independently of the servo status. This function is used for output signal wiring check, etc. Exercise control on the DO forced output screen of MR Configurator2.

(c) Program operation
Positioning operation can be performed in two or more operation patterns combined, without using the servo system controller. Use this operation with the forced stop reset. This operation may be used independently of whether the servo is on or off and whether the servo system controller is connected or not.
Exercise control on the program operation screen of MR Configurator2. For full information, refer to the MR Configurator2 Installation Guide.

Operation	Screen control
Start	Click the "Operation start" button.
Pause	Click the "Pause" button.
Stop	Click the "Stop" button.
Forced stop	Click the "Forced stop" button.

(2) Operation procedure

1) Turn off the power.

2) Turn "ON (up)" SW2-1.

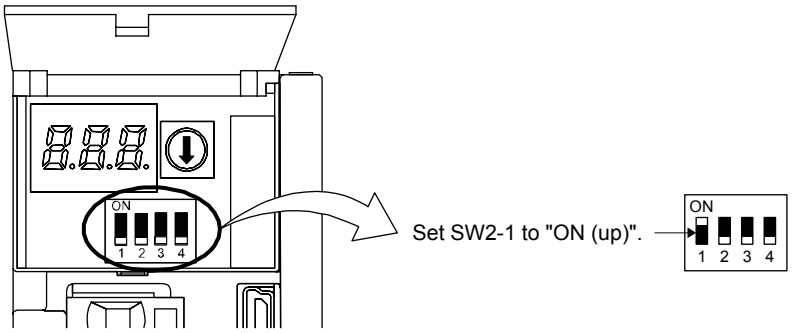

Turning "ON (up)" SW2-1 during power-on will not enable the test operation mode.

3) Turn on the servo amplifier.
When initialization is over, the display shows the following screen.

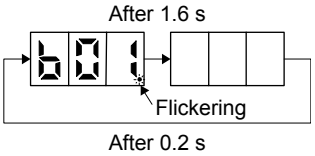

4) Start operation with the personal computer.

14.3.5 Operation from controller

The linear servo can be used with any of the following controllers.

Servo system controller	Model
Motion controller	Q17_DSCPU
Simple motion module	QD77MS_

(1) Operation method

For the system using the incremental linear encoder, the magnetic pole detection is automatically performed at the first servo-on after the power-on. For this reason, when performing the positioning operation, create the sequence which surely confirms the servo-on status as the inter lock condition of the positioning command.

Also, some parameter settings and the home position return type differ according to the controller type.

(2) Servo system controller setting

(a) Setting precautions

The following parameters will be enabled by cycling the servo amplifier power after the controller writes the parameters to the servo amplifier.

Setting item					Set content	
					Motion controller Q17_DSCPU	Simple motion module QD77MS_
Command resolution					Linear encoder resolution unit	
Parameter	Servo amplifier setting				MR-J4-B Linear	
	Motor setting				Automatic setting	
	No.	(Note) Symbol	Name	Initial value		
	PA01	**STY	Operation mode	1000h	1040h	
	PC01	ERZ	Error excessive alarm level	0	Set the items as required.	
	PC03	*ENRS	Encoder output pulse selection	0000h		
	PC27	**COP9	Function selection C-9	0000h		
	PL01	**LIT1	Linear servo motor/DD motor function selection 1	0301h		
	PL02	**LIM	Linear encoder resolution - Numerator	1000		
	PL03	**LID	Linear encoder resolution - Denominator	1000		
	PL04	*LIT2	Linear servo motor/DD motor function selection 2	0003h		
	PL05	LB1	Position deviation error detection level	0		
	PL06	LB2	Speed deviation error detection level	0		
	PL07	LB3	Torque/thrust deviation error detection level	100		
	PL08	*LIT3	Linear servo motor/DD motor function selection 3	0010h		
	PL09	LPWM	Magnetic pole detection voltage level	30		
	PL17	LTSTS	Magnetic pole detection - Minute position detection method - Function selection	0000h		
	PL18	IDLV	Magnetic pole detection - Minute position detection method - Identification signal amplitude	0		
Positioning control parameter	Unit setting				mm	
	Number of pulses (AP) Travel distance (AL)				Refer to (2) (b) of this section.	

Note. The parameter whose symbol is preceded by * is enabled with the following conditions.

* : After setting the parameter, power off and on the servo amplifier or reset the controller.

**: After setting the parameter, cycle the power of the servo amplifier.

(b) Settings of the number of pulses (AP) and travel distance (AL)

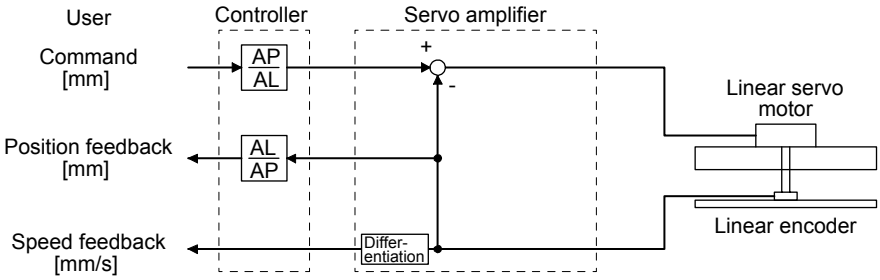

Calculate the number of pulses (AP) and travel distance (AL) of the linear encoder in the following conditions.

When the linear encoder resolution is 0.05 μm

$$\frac{\text{Number of pulses (AP) [pulse]}}{\text{Travel distance (AL) [μm]}} = \frac{1}{0.05} = \frac{20}{1}$$

14.3.6 Function

(1) Linear servo control error detection function

POINT
●For the linear servo control error detection function, the position and speed deviation error detections are enabled by default. ([Pr. PL04]: _ _ _ 3)

If the linear servo control gets unstable for some reasons, the linear servo motor may not operate properly. To detect this state and to stop operation, the linear servo control error detection function is used as a protective function.
The linear servo control error detection function has three different detection methods: the position deviation, speed deviation, and thrust deviation. An error is detected when each method is enabled with [Pr. PL04 Linear servo motor/DD motor function selection 2]. The detection level can be changed with [Pr. PL05], [Pr. PL06], and [Pr. PL07].

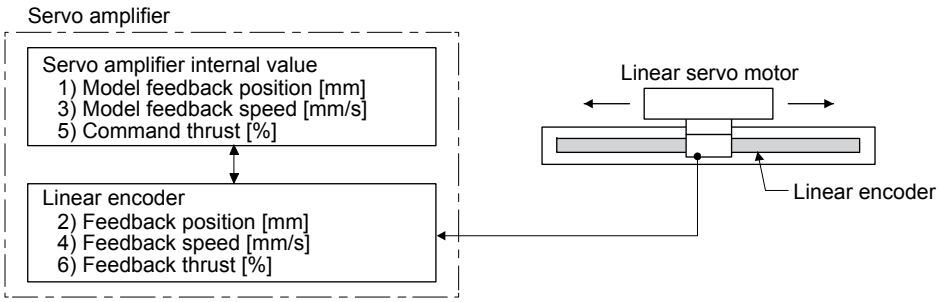

Figure 14.1 Outline of linear servo control error detection function

(a) Position deviation error detection

Set [Pr. PL04] to "_ _ _ 1" to enable the position deviation error detection.

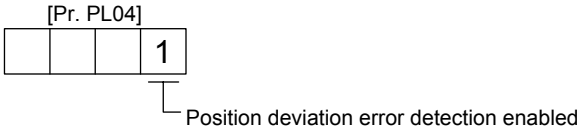

When you compare the model feedback position (1)) and the feedback position (2)) in figure 14.1, if the deviation is more than the value of [Pr. PL05 Position deviation error detection level] (1 mm to 1000 mm), [AL. 42.1 Servo control error by position deviation] will occur and the linear servo motor will stop. The initial value of this detection level is 50 mm. Replace the set value as required.

(b) Speed deviation error detection

Set [Pr. PL04] to "_ _ _ 2" to enable the speed deviation error detection.

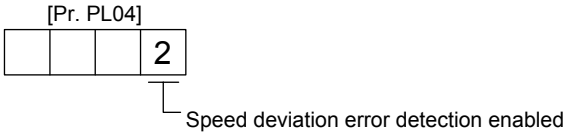

When you compare the model feedback speed (3)) and the feedback speed (4)) in figure 14.1, if the deviation is more than the value of [Pr. PL06 Speed deviation error detection level] (1 mm/s to 5000 mm/s), [AL. 42.2 Servo control error by speed deviation] will occur and the linear servo motor will stop. The initial value of this detection level is 1000 mm/s. Replace the set value as required.

(c) Thrust deviation error detection level

Set [Pr. PL04] to "_ _ _ 4" to enable the thrust deviation error detection.

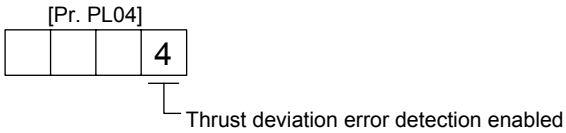

When you compare the command thrust (5)) and the feedback thrust (6)) in figure 14.1, if the deviation is more than the value of [Pr. PL07 Torque/thrust deviation error detection level] (1% to 1000%), [AL. 42.3 Servo control error by torque/thrust deviation] will occur and the linear servo motor will stop. The initial value of this detection level is 100%. Replace the set value as required.

(d) Detecting multiple deviation errors

When setting [Pr. PL04] as shown below, multiple deviation errors can be detected. For the error detection methods, refer to (1) (a), (b), (c) of this section.

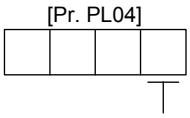

Setting value	Position deviation error detection	Speed deviation error detection	Thrust deviation error detection
1	○		
2		○	
3	○	○	
4			○
5	○		○
6		○	○
7	○	○	○

(2) Auto tuning function

The auto tuning function during the linear servo motor operation is the same as that of the rotary servo motor. However, the calculation method of the load to motor mass ratio (J ratio) differs. The load to motor mass ratio (J ratio) on the linear servo motor is calculated by dividing the load mass by the mass of the linear servo motor primary side.

Example)	Mass of linear servo motor primary side	= 2 kg
	Load mass (excluding the mass of the linear servo motor primary side)	= 4 kg
	Mass ratio	= 4/2 = 2 times

For the parameters set by the auto tuning function, refer to chapter 6.

POINT

- The auto tuning mode 1 may not be performed properly if the following conditions are not satisfied.
  - Time to reach 2000 mm/s is the acceleration/deceleration time constant of 5 s or less.
  - The linear servo motor speed is 150 mm/s or higher.
  - The load to mass of the linear servo motor primary-side ratio is 100 times or less.
  - The acceleration/deceleration thrust is 10% or less of the continuous thrust.

(3) Machine analyzer function

POINT

- Make sure to perform the machine analyzer function after the magnetic pole detection. If the magnetic pole detection is not performed, the machine analyze function may not operate properly.
- The stop position at the completion of the machine analyzer function can be any position.

14.3.7 Absolute position detection system

When the linear servo motor is used with the absolute position detection system, an absolute position linear encoder is required. The linear encoder backs up the absolute position data. Therefore, the encoder battery need not be installed to the servo amplifier. Additionally, [AL. 25 Absolute position erased], [AL. 92 Battery cable disconnection warning], [AL. 9F Battery warning], and [AL. E3 Absolute position counter warning] are not provided for the linear servo motor.

14.4 Characteristics

14.4.1 Overload protection characteristics

An electronic thermal is built in the servo amplifier to protect the linear servo motor, servo amplifier and linear servo motor power wires from overloads.
[AL. 50 Overload 1] occurs if overload operation performed is above the electronic thermal protection curve shown in fig. 14.2. [AL. 51 Overload 2] occurs if the maximum current is applied continuously for several seconds due to machine collision, etc. Use the equipment on the left-side area of the continuous or broken line in the graph.
Use the linear servo motor with 70% or less of the effective load ratio when it is in the servo lock state or in a small reciprocating motion.
This servo amplifier has solid-state linear servo motor overload protection. (The servo motor overload current (full load current) is set on the basis of 120% rated current of the servo amplifier.)

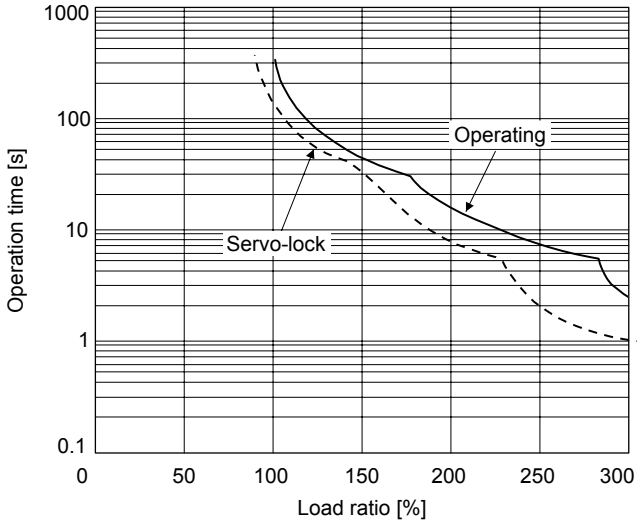

a. LM-H3 series
LM-K2 series

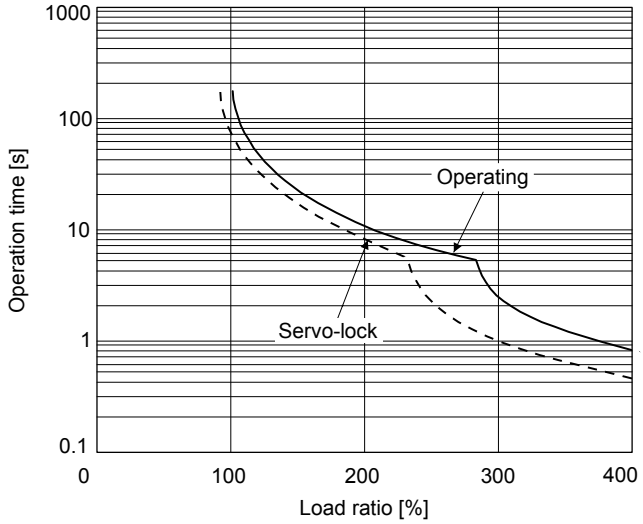

b. LM-U2 series

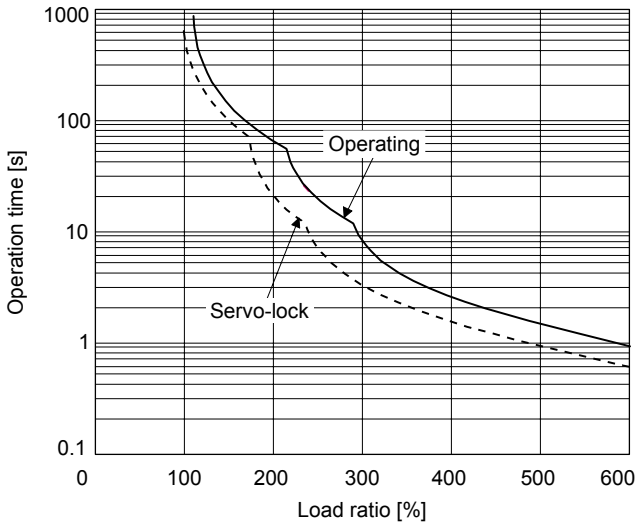

c. LM-F series (natural cooling)

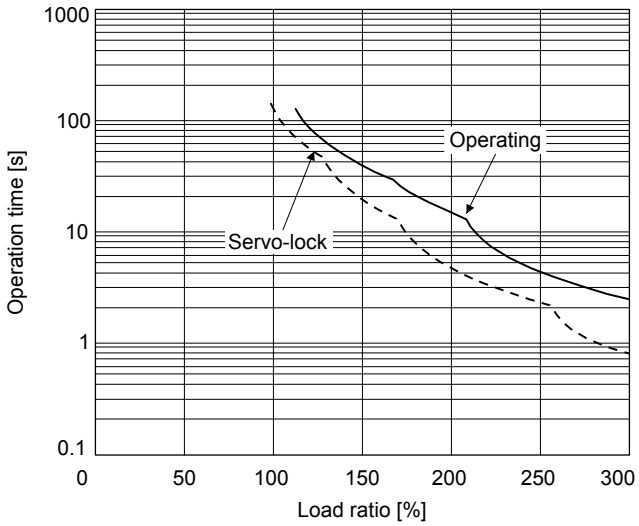

d. LM-F series (liquid cooling)

Fig. 14.2 Electronic thermal protection characteristics

14.4.2 Power supply capacity and generated loss

Table 14.1 indicates servo amplifiers' power supply capacities and losses generated under rated load. For thermal design of an enclosed type cabinet, use the values in the table in consideration for the worst operating conditions. The actual amount of generated heat will be intermediate between values at rated torque and servo-off according to the duty used during operation. When the linear servo motor is run at less than the rated speed, the power supply capacity will be smaller than the value in the table, but the servo amplifier's generated heat will not change.
Mounting a heat sink outside of the cabinet enables to reduce heat in the cabinet and design a compact enclosed type cabinet.

Table 14.1 Power supply capacity and generated loss per linear servo motor at rated output

Linear servo motor	Servo amplifier	Power supply capacity [kVA] (Note 1)	Servo amplifier-generated heat [W] (Note 2)		Area required for heat dissipation [m^2]
			At rated output	With servo-off	
LM-H3P2A-07P-BSS0	MR-J4-40B(-RJ)	0.9	35	15	0.7
LM-H3P3A-12P-CSS0		0.9	35	15	0.7
LM-H3P3B-24P-CSS0	MR-J4-70B(-RJ)	1.3	50	15	1.0
LM-H3P3C-36P-CSS0		1.9	75	15	1.5
LM-H3P3D-48P-CSS0	MR-J4-200B(-RJ)	3.5	90	20	1.8
LM-H3P7A-24P-ASS0	MR-J4-70B(-RJ)	1.3	50	15	1.0
LM-H3P7B-48P-ASS0	MR-J4-200B(-RJ)	3.5	90	20	1.8
LM-H3P7C-72P-ASS0		3.8	100	20	1.1
LM-H3P7D-96P-ASS0	MR-J4-350B(-RJ)	5.5	130	20	2.7
LM-U2PAB-05M-0SS0	MR-J4-20B(-RJ)	0.5	25	15	0.5
LM-U2PAD-10M-0SS0	MR-J4-40B(-RJ)	0.9	35	15	0.7
LM-U2PAF-15M-0SS0		0.9	35	15	0.7
LM-U2PBB-07M-1SS0	MR-J4-20B(-RJ)	0.5	25	15	0.5
LM-U2PBD-15M-1SS0	MR-J4-60B(-RJ)	1.0	40	15	0.8
LM-U2PBF-22M-1SS0	MR-J4-70B(-RJ)	1.3	50	15	1.0
LM-U2P2B-40M-2SS0	MR-J4-200B(-RJ)	3.5	90	20	1.8
LM-U2P2C-60M-2SS0	MR-J4-350B(-RJ)	5.5	130	20	2.7
LM-U2P2D-80M-2SS0	MR-J4-500B(-RJ)	7.5	195	25	3.9
LM-FP2B-06M-1SS0	MR-J4-200B(-RJ)	3.5	90	20	1.8
LM-FP2D-12M-1SS0	MR-J4-500B(-RJ)	7.5	195	25	3.9
LM-FP2F-18M-1SS0	MR-J4-700B(-RJ)	10	300	25	6.0
LM-FP4B-12M-1SS0	MR-J4-500B(-RJ)	7.5	195	25	3.9
LM-FP4D-24M-1SS0	MR-J4-700B(-RJ)	10	300	25	6.0
LM-FP4F-36M-1SS0	MR-J4-11KB(-RJ)	14	460	45	9.2
LM-FP4H-48M-1SS0	MR-J4-15KB(-RJ)	18	580	45	11.6
LM-FP5H-60M-1SS0	MR-J4-22KB4(-RJ)	22	640	45	12.8
LM-K2P1A-01M-2SS1	MR-J4-40B(-RJ)	0.9	35	15	0.7
LM-K2P1C-03M-2SS1	MR-J4-200B(-RJ)	3.5	90	20	1.8
LM-K2P2A-02M-1SS1	MR-J4-70B(-RJ)	1.3	50	15	1.0
LM-K2P2C-07M-1SS1	MR-J4-350B(-RJ)	5.5	130	20	2.7
LM-K2P2E-12M-1SS1	MR-J4-500B(-RJ)	7.5	195	25	3.9
LM-K2P3C-14M-1SS1	MR-J4-350B(-RJ)	5.5	130	20	2.7
LM-K2P3E-24M-1SS1	MR-J4-500B(-RJ)	7.5	195	25	3.9

Note 1. Note that the power supply capacity will vary according to the power supply impedance. This value is applicable when the power factor improving AC reactor or power factor improving DC reactor are not used.
2. Heat generated during regeneration is not included in the servo amplifier-generated heat. To calculate heat generated by the regenerative option, refer to section 11.2.

14.4.3 Dynamic brake characteristics

POINT

- Do not use dynamic brake to stop in a normal operation as it is the function to stop in emergency.
- For a machine operating at the recommended load to motor mass ratio or less, the estimated number of usage times of the dynamic brake is 1000 times while the machine decelerates from the rated speed to a stop once in 10 minutes.
- Be sure to enable EM1 (Forced stop 1) after the linear servo motor stops when using EM1 (Forced stop 1) frequently in other than emergency.

The approximate coasting distance from when the dynamic break is activated until when the linear servo motor stops can be calculated with the equation below.

$$Lmax = V_0 \cdot (0.03 + M \cdot (A + B \cdot V_0^2))$$

Lmax: Coasting distance of the machine [m]
V_0: Speed when the brake is activated [m/s]
M: Full mass of the moving part [kg]
A: Coefficient (Refer to the following tables.)
B: Coefficient (Refer to the following tables.)

Linear servo motor	Coefficient A	Coefficient B
LM-H3P2A-07P-BSS0	7.15E-03	2.94E-03
LM-H3P3A-12P-CSS0	2.81E-03	1.47E-03
LM-H3P3B-24P-CSS0	7.69E-03	2.27E-04
LM-H3P3C-36P-CSS0	7.22E-03	1.13E-04
LM-H3P3D-48P-CSS0	1.02E-03	2.54E-04
LM-H3P7A-24P-ASS0	7.69E-03	2.14E-04
LM-H3P7B-48P-ASS0	9.14E-04	2.59E-04
LM-H3P7C-72P-ASS0	7.19E-04	1.47E-04
LM-H3P7D-96P-ASS0	6.18E-04	9.59E-05

Linear servo motor	Coefficient A	Coefficient B
LM-U2PAB-05M-0SS0	5.72×10^{-2}	1.72×10^{-4}
LM-U2PAD-10M-0SS0	2.82×10^{-2}	8.60×10^{-5}
LM-U2PAF-15M-0SS0	1.87×10^{-2}	5.93×10^{-5}
LM-U2PBB-07M-1SS0	3.13×10^{-2}	1.04×10^{-4}
LM-U2PBD-15M-1SS0	1.56×10^{-2}	5.18×10^{-5}
LM-U2PBF-22M-1SS0	4.58×10^{-2}	1.33×10^{-5}
LM-U2P2B-40M-2SS0	1.47×10^{-3}	1.27×10^{-5}
LM-U2P2C-60M-2SS0	1.07×10^{-3}	7.66×10^{-6}
LM-U2P2D-80M-2SS0	9.14×10^{-4}	5.38×10^{-6}

Linear servo motor	Coefficient A	Coefficient B
LM-FP2B-06M-1SS0	8.96×10^{-4}	1.19×10^{-3}
LM-FP2D-12M-1SS0	5.55×10^{-4}	4.81×10^{-4}
LM-FP2F-18M-1SS0	4.41×10^{-4}	2.69×10^{-4}
LM-FP4B-12M-1SS0	5.02×10^{-4}	4.36×10^{-4}
LM-FP4D-24M-1SS0	3.55×10^{-4}	1.54×10^{-4}
LM-FP4F-36M-1SS0	1.79×10^{-4}	1.36×10^{-4}
LM-FP4H-48M-1SS0	1.15×10^{-4}	1.19×10^{-4}
LM-FP5H-60M-1SS0	1.95×10^{-4}	4.00×10^{-5}

Linear servo motor	Coefficient A	Coefficient B
LM-K2P1A-01M-2SS1	5.36×10^{-3}	6.56×10^{-3}
LM-K2P1C-03M-2SS1	1.17×10^{-3}	3.75×10^{-4}
LM-K2P2A-02M-1SS1	2.49×10^{-2}	1.02×10^{-3}
LM-K2P2C-07M-1SS1	6.85×10^{-4}	2.80×10^{-4}
LM-K2P2E-12M-1SS1	5.53×10^{-4}	1.14×10^{-4}
LM-K2P3C-14M-1SS1	2.92×10^{-4}	1.16×10^{-4}
LM-K2P3E-24M-1SS1	2.53×10^{-4}	5.52×10^{-5}

⚠CAUTION

- The coasting distance is a theoretically calculated value which ignores the running load such as friction. The calculated value is considered to be longer than the actual distance. However, if an enough breaking distance is not obtained, the linear servo motor may crash into the stroke end, which is very dangerous. Install the anti-crash mechanism such as an air brake or an electric/mechanical stopper such as a shock absorber to reduce the shock of moving parts. No linear servo motor with an electromagnetic brake is available.

14.4.4 Permissible load to motor mass ratio when the dynamic brake is used

Use the dynamic brake under the load to motor mass ratio indicated in the following table. If the load to motor mass ratio is higher than this value, the dynamic brake may burn. If there is a possibility that the load inertia moment may exceed the value, contact your local sales office.
The values of the permissible load to motor mass ratio in the table are the values when the linear servo motor is used at the maximum speed.

Linear servo motor	Permissible load to motor mass ratio [multiplier]
LM-H3 series	40
LM-U2 series	100
LM-F series	
LM-K2 series	50

When actual speed does not reach the maximum speed of the servo motor, calculate the permissible load to motor mass ratio at the time of using the dynamic brake by the following equation. (The upper limit is 300 times.)

Permissible load to motor mass ratio at the time of using the dynamic brake = Value in the table × (Servo motor maximum speed^2/Actual using speed^2)

For example, when an actual using speed is 2 m/s or less for the LM-H3P2A-07P motor (maximum speed: 3.0 m/s), the equation will be as follows. Permissible load to motor mass ratio at the time of using the dynamic brake = $40 \times 3^2/2^2 = 90$ [times]

MEMO

15. USING A DIRECT DRIVE MOTOR

⚠CAUTION ●When using the direct drive motor, read the "Direct Drive Motor Instruction Manual".

15.1 Functions and configuration

15.1.1 Summary

The fields of semiconductor/LCD manufacturing systems, mounters, and others have strong demands for high accuracy and efficiency. Therefore, the number of systems using a direct drive motor for a drive axis has been increasing. The direct drive servo system includes the following features.

(1) Performance
- (a) The direct drive servo system ensures the high-rigidity and the high-torque. A high-resolution encoder enables the high-accuracy control.
- (b) The high-resolution encoder contributes to the high-indexer accuracy.
- (c) Since reducer is no longer required, no backlash occurs. In addition, the settling time is reduced, and the high-frequency operation is enabled.
- (d) Since reducer is no longer required, the motor does not deteriorate with time by reducer.

(2) Mechanism
- (a) The motor's low profile design contributes to compact moving part of the machine and a low center of gravity for enhanced equipment stability.
- (b) The motor has an inner rotor with hollow shaft which enables cables and pipes to be passed through.
- (c) Lubrication and the maintenance due to abrasion are not required.

The following shows the differences between the direct drive motor and the rotary servo motor.

Category	Item	Differences		Remarks
		Direct drive motor	Rotary servo motor	
External I/O signal	FLS (Upper stroke limit), RLS (Lower stroke limit)	Required (for magnetic pole detection)	Not required	Automatically turns on in the parameter setting.
Motor pole adjustment	Magnetic pole detection	Required	Not required (default setting)	Automatically executed at the first servo-on after the power is turned on. For the absolute position detection system, [Pr. PL01] can disable the magnetic pole detection. (Refer to (3) (a) of section 15.3.2.)
Absolute position detection system	Absolute position encoder battery	Required	Required	
	Absolute position storage unit (MR-BTAS01)	Required	Not required	

15.1.2 Servo system with auxiliary equipment

⚠CAUTION	●Connecting a direct drive motor for different axis to the U, V, W, or CN2 may cause a malfunction.

POINT

●Equipment other than the servo amplifier and direct drive motor are optional or recommended products.

●When using the direct drive motor, set [Pr. PA01] to "_ _ 6 _".

(1) MR-J4-_B

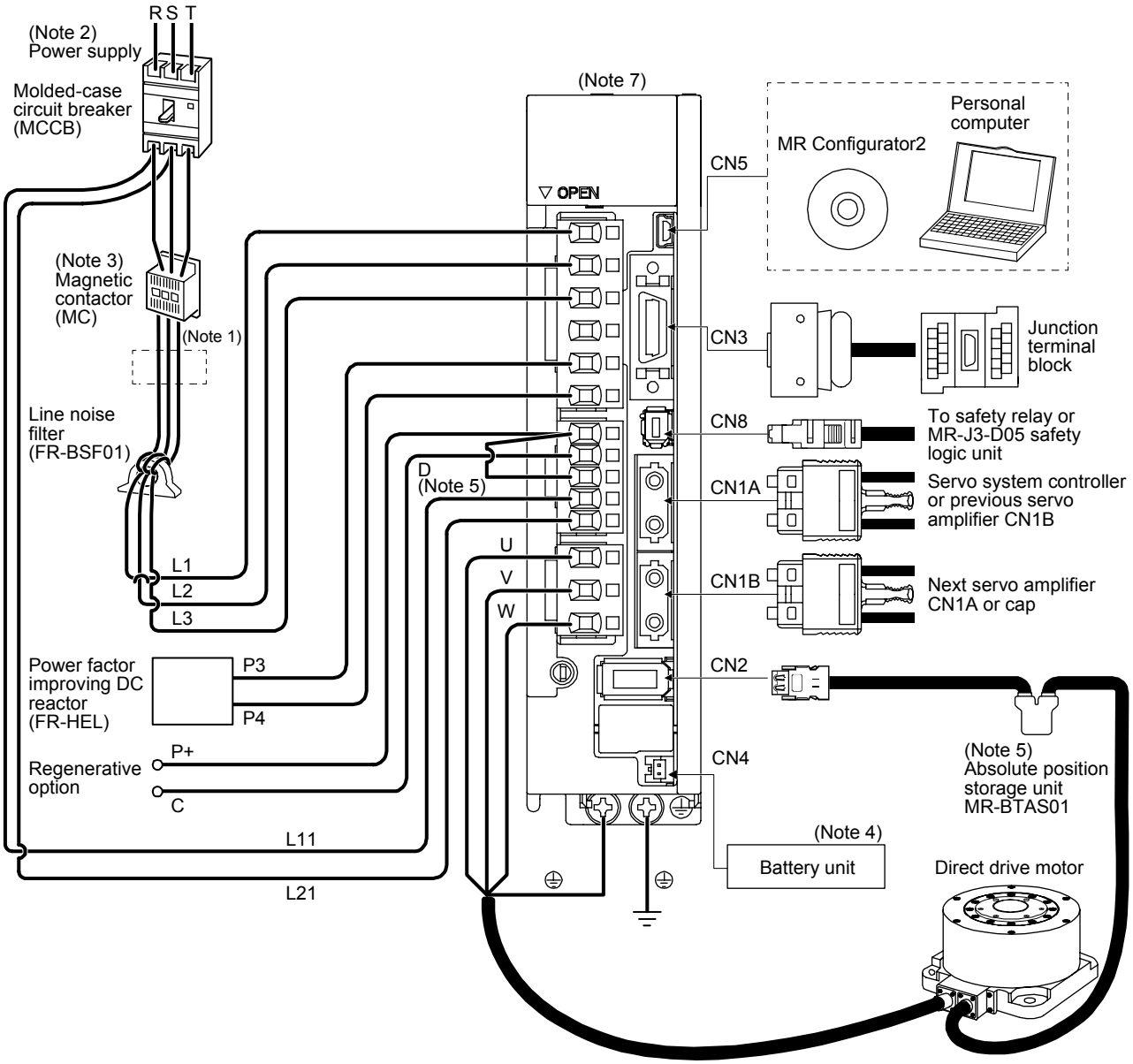

Note 1. The power factor improving AC reactor can also be used. In this case, the power factor improving DC reactor cannot be used. When not using the power factor improving DC reactor, short P3 and P4.
2. A 1-phase 200 V AC to 240 V AC power supply may be used with the servo amplifier of MR-J4-70B(-RJ) or less. For 1-phase 200 V AC to 240 V AC, connect the power supply to L1 and L3. Leave L2 open. For the power supply specifications, refer to section 1.3.
3. Depending on the main circuit voltage and operation pattern, bus voltage decreases, and that may cause the forced stop deceleration to shift to the dynamic brake deceleration. When dynamic brake deceleration is not required, slow the time to turn off the magnetic contactor.
4. The battery unit is used for the absolute position detection system. (Refer to chapter 12.)
5. Always connect P+ and D. When using the regenerative option, refer to section 11.2.
6. The absolute position storage unit is used for the absolute position detection system.
7. This is for MR-J4-_B_. MR-J4-_B_-RJ has a CN2L connector. However, CN2L is not used for the direct drive servo system.

15.2 Signals and wiring

⚠WARNING

- Any person who is involved in wiring should be fully competent to do the work.
- Before wiring, turn off the power and wait for 15 minutes or more until the charge lamp turns off. Then, confirm that the voltage between P+ and N- is safe with a voltage tester and others. Otherwise, an electric shock may occur. In addition, when confirming whether the charge lamp is off or not, always confirm it from the front of the servo amplifier.
- Ground the servo amplifier and the direct drive motor securely.
- Do not attempt to wire the servo amplifier and the direct drive motor until they have been installed. Otherwise, it may cause an electric shock.
- The cables should not be damaged, stressed, loaded, or pinched. Otherwise, it may cause an electric shock.
- To avoid an electric shock, insulate the connections of the power supply terminals.

⚠CAUTION

- Wire the equipment correctly and securely. Otherwise, the direct drive motor may operate unexpectedly, resulting in injury.
- Connect cables to the correct terminals. Otherwise, a burst, damage, etc. may occur.
- Ensure that polarity (+/-) is correct. Otherwise, a burst, damage, etc. may occur.
- The surge absorbing diode installed to the DC relay for control output should be fitted in the specified direction. Otherwise, the emergency stop and other protective circuits may not operate.

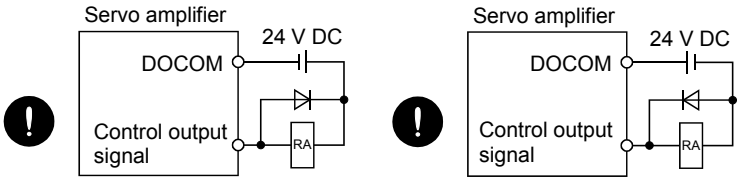

For sink output interface　　For source output interface

- Use a noise filter, etc. to minimize the influence of electromagnetic interference. Electromagnetic interference may be given to the electronic equipment used near the servo amplifier.
- Do not install a power capacitor, surge killer, or radio noise filter (FR-BIF option) with the power wire of the direct drive motor.

⚠CAUTION

- When using the regenerative resistor, switch power off with the alarm signal. Otherwise, a transistor fault or the like may overheat the regenerative resistor, causing a fire.
- Do not modify the equipment.
- Connect the servo amplifier power output (U, V, and W) to the power input of the direct drive motor (U, V, and W) directly. Do not let a magnetic contactor, etc. intervene. Otherwise, it may cause a malfunction.

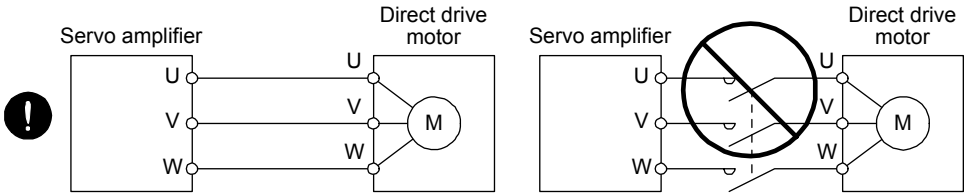

- Connecting a servo motor for different axis to the U, V, W, or CN2 may cause a malfunction.

This chapter does not describe the following items. For details of the items, refer to each section of the detailed description field.

Item	Detailed explanation
Input power supply circuit	Section 3.1
Explanation of power supply system	Section 3.3
Signal (device) explanations	Section 3.5
Alarm occurrence timing chart	Section 3.7
Interfaces	Section 3.8
SSCNET III cable connection	Section 3.9
Grounding	Section 3.11
Switch setting and display of the servo amplifier	Section 4.3
PARAMETERS	Chapter 5
TROUBLESHOOTING	Chapter 8

15.3 Operation and functions

POINT

- When using the direct drive motor, set [Pr. PA01] to "_ _ 6 _".
- For the test operation, refer to section 4.4.
- The Z-phase pulse of the direct drive motor must be turned on after power-on. When the machine configuration does not allow one or more revolution of the direct drive motor, install the direct drive motor so that the Z-phase pulse can be turned on.

15.3.1 Startup procedure

Start up the direct drive servo in the following procedure.

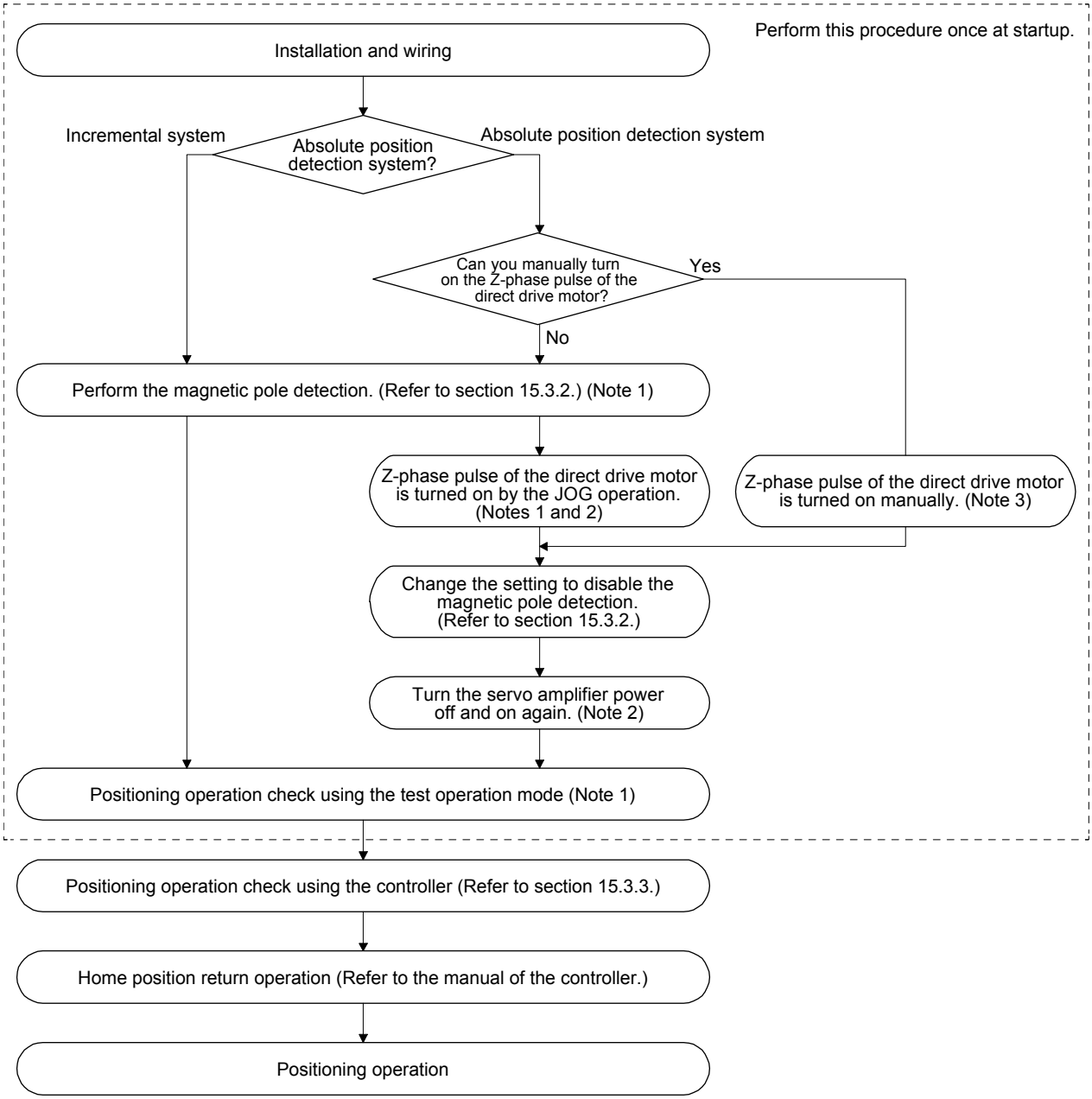

Note 1. Use MR Configurator2.

2. For the absolute position detection system, always turn on the Z-phase pulse of the direct drive motor while the servo amplifier power is on, and then turn the servo amplifier power supply off and on again. By turning off and on the power supply, the absolute position becomes confirmed. Without this operation, the absolute position will not be regained properly, and a warning will occur at the controller.

3. If the Z-phase pulse of the direct drive motor can be turned on manually, the Z-phase pulse does not have to be turned on by the magnetic pole detection or the JOG operation.
For this operation, always connect the direct drive motor encoder and the servo amplifier, and turn on only the control circuit power supply of the servo amplifier (L11 and L21) (turn off the main circuit power supply L1, L2, and L3). Perform this operation by considering the safety.

15.3.2 Magnetic pole detection

POINT

- The magnetic pole detection is not required for the configured absolute position detection system where the Z-phase pulse of the direct drive motor can be turned on manually.
  For this operation, always connect the direct drive motor encoder and the servo amplifier and turn on the control circuit power supply of the servo amplifier.
  Perform this operation by considering the safety.
- When performing a magnetic pole detection without using FLS (Upper stroke limit) and RLS (Lower stroke limit), set [Pr. PL08 Linear servo motor/DD motor function selection 3] to "_ 1 _ _" to disable FLS and RLS.

Before the positioning operation of the direct drive motor, make sure to perform the magnetic pole detection.
Before starting up the equipment, perform the test operation (positioning operation) of MR Configurator2.

(1) Magnetic pole detection method by using MR Configurator2

The following shows the magnetic pole detection procedure by using MR Configurator2.

(a) Magnetic pole detection by the position detection method

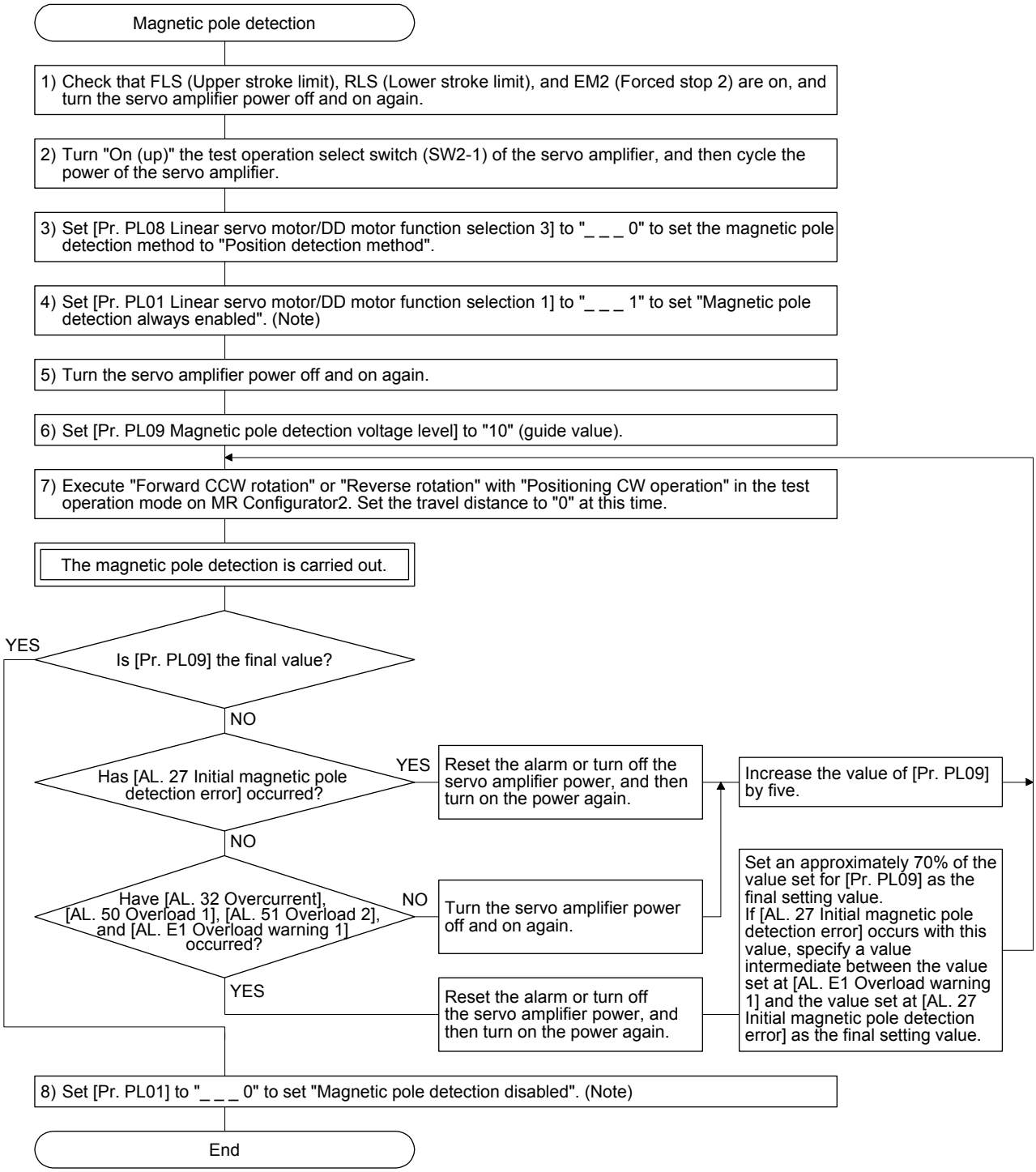

Note. For the incremental system, the [Pr. PL01] setting is not required.

(b) Magnetic pole detection by the minute position detection method

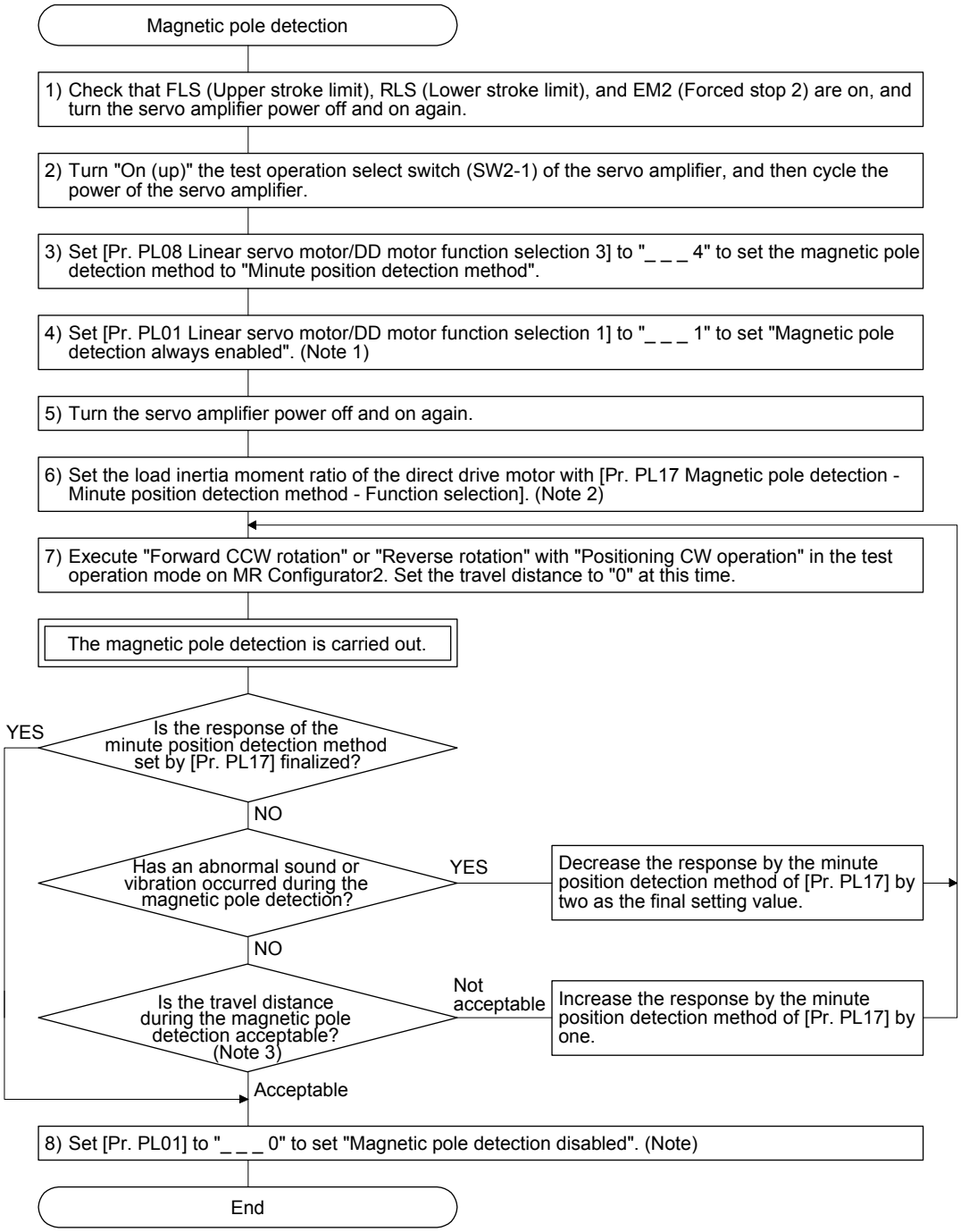

Note 1. For the incremental system, the [Pr. PL01] setting is not required.
2. If the load to direct drive motor inertia ratio is unknown, perform the magnetic pole detection by the position detection method, and then perform the auto tuning to set an estimated value.
3. For the magnetic pole detection by the minute position detection method, the maximum rotation angle at the magnetic pole detection must be five degrees or less. To shorten the travel distance, increase the response by the minute position detection method in [Pr. PL17].

(c) State transition of the servo amplifier display (3-digit, 7-segment LED) at the magnetic pole detection
When the magnetic pole detection with MR Configurator2 is normally executed, the servo amplifier display (3-digit, 7-segment LED) shows the state as below.

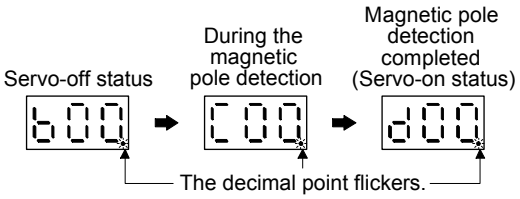

(2) Preparation for the magnetic pole detection

POINT
●When the test operation mode is selected with the test operation select switch (SW2-1), the SSCNET III/H communication for the servo amplifier in the test operation mode and the following servo amplifiers is blocked.

For the magnetic pole detection, use the test operation mode (positioning operation) of MR Configurator2. Turn off the servo amplifier power, and set the test operation select switch (SW2-1) and the disabling control axis switch (SW2-2, SW2-3, and SW2-4) as shown below. Turning on the power enables the test operation mode.

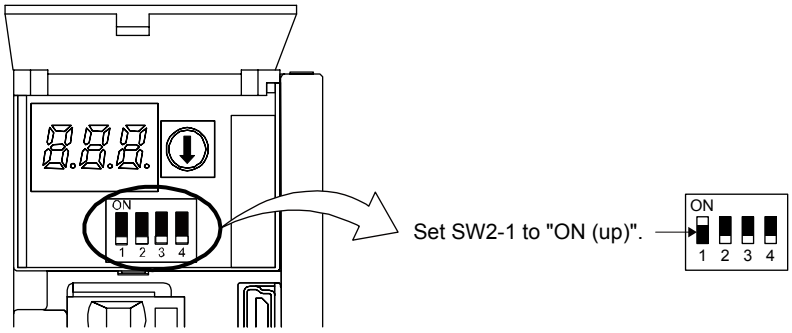

(3) Operation at the magnetic pole detection

⚠WARNING	●Note that the magnetic pole detection automatically starts simultaneously with the turning-on of the servo-on command.

⚠CAUTION	●If the magnetic pole detection is not executed properly, the direct drive motor may operates unexpectedly.

POINT

- ●Establish the machine configuration using FLS (Upper stroke limit) and RLS (Lower stroke limit). Otherwise, the machine may be damaged due to a collision.
- ●At the magnetic pole detection, whether the motor rotates in the forward or reverse direction is unpredictable.
- ●Depending on the setting value of [Pr. PL09 Magnetic pole detection voltage level], an overload, overcurrent, magnetic pole detection alarm, or others may occur.
- ●When performing the positioning operation from a controller, use the sequence which confirms the normal completion of the magnetic pole detection and the servo-on status, then outputs the positioning command. If the controller outputs the positioning command before RD (Ready) turns on, the command may not be accepted or a servo alarm may occur.
- ●After the magnetic pole detection, check the positioning accuracy with the test operation (positioning operation function) of MR Configurator2.
- ●The accuracy of the magnetic pole detection improves with no load.

(a) Incremental system

POINT

- ●For the incremental system, the magnetic pole detection is required every time the power is turned on.

By turning on the servo-on command from the controller after the power-on, the magnetic pole detection is automatically carried out. Therefore, there is not need to set the parameter (first digit of [Pr. PL01]) for executing the magnetic pole detection.

1) Timing chart

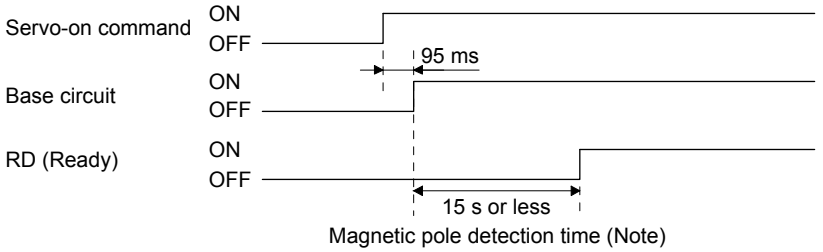

Note. The magnetic pole detection time indicates the operation time when FLS (Upper stroke limit) and RLS (Lower stroke limit) are on.

2) Direct drive motor movement (when FLS and RLS are on)

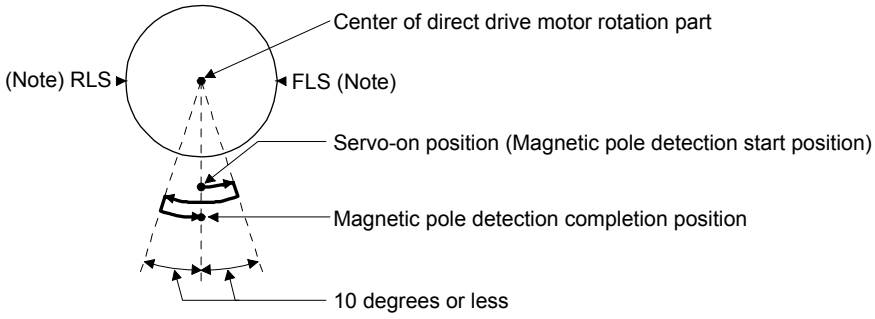

Note. When the stroke limit (FLS or RLS) turns off during the magnetic pole detection, the magnetic pole detection is carried on to the opposite direction. When FLS and RLS are off, [AL. 27 Initial magnetic pole detection error] occurs.

3) Direct drive motor movement (when FLS or RLS is off)
When FLS or RLS is off at servo-on, the magnetic pole detection is carried out as follows.

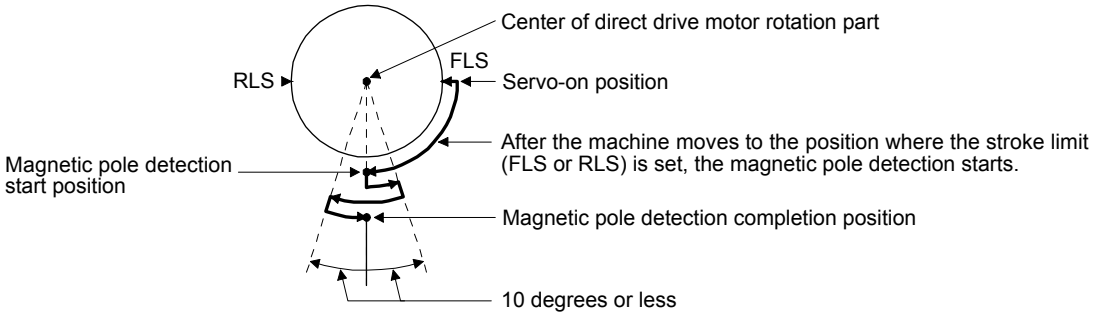

(b) Absolute position detection system

POINT
●When the absolute position detection system is used, the magnetic pole detection is required when the power is turned on with the following timing. ・When the system is set up (at the first startup of equipment) ・When the Z-phase pulse of the direct drive motor is not turned on at the system setup (When the Z-phase pulse of the direct drive motor can be turned on manually, the magnetic pole detection is not required.) ・After a direct drive motor is replaced ・When [AL. 25 Absolute position erased] has occurred ●Turn on the Z-phase pulse of the direct drive motor in JOG operation from the controller after the magnetic pole detection.

Perform the magnetic pole detection in the following procedure.

1) Set [Pr. PL01 Linear servo motor/DD motor function selection 1] to "_ _ _ 1" (Magnetic pole detection at first servo-on).

[Pr. PL01]

			1

Magnetic pole detection at first servo-on (initial value)

2) Execute the magnetic pole detection. (Refer to (2) (a) 1), 2) of this section.)

3) After the completion of the magnetic pole detection, change [Pr. PL01] to "_ _ _ 0" (Magnetic pole detection disabled).

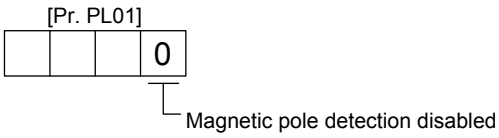

After the magnetic pole detection, by turning on the Z-phase pulse in JOG operation and by disabling the magnetic pole detection function with [Pr. PL01], the magnetic pole detection after each power-on is not required.

(4) Magnetic pole detection method setting
Set the magnetic pole detection method using the first digit of [Pr. PL08] (Magnetic pole detection method selection).

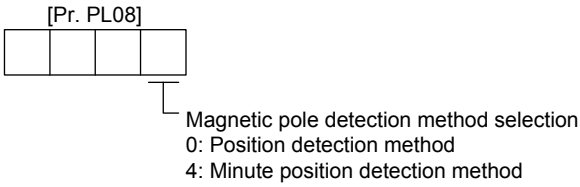

(5) Setting of the magnetic pole detection voltage level by the position detection method
For the magnetic pole detection by the position detection method, set the voltage level with [Pr. PL09 Magnetic pole detection voltage level]. For the magnetic pole detection by the minute position detection method, the voltage level setting is not required.

(a) Guideline of parameter settings
Set the parameters by referring to the following table.

[Pr. PL09] setting (Guide value) / Servo status	Small ← Medium → Large (10 or less (initial value) 50 or more)	
Torques required for operation	Small	Large
Overload, overcurrent alarm	Not frequently occurs	Frequently occurs
Magnetic pole detection alarm	Frequently occurs	Not frequently occurs
Magnetic pole detection accuracy	Low	High

(b) Setting procedure

1) Perform the magnetic pole detection, and increase the setting value of [Pr. PL09 Magnetic pole detection voltage level] until [AL. 50 Overload 1], [AL. 51 Overload 2], [AL. E1 Overload warning 1], and [AL. EC Overload warning 2] occur. Increase the setting value by five as a guide value. When these alarms and warnings occur during the magnetic pole detection by using MR Configurator2, the test operation of MR Configurator2 automatically completes and the servo-off status is established.

2) Specify the setting value that is an approximately 70% of the value set when [AL. 50 Overload 1], [AL. 51 Overload 2], [AL. E1 Overload warning 1], and [AL. EC Overload warning 2] occurred as the final setting value. However, if [AL. 27 Initial magnetic pole detection error] occurs with this value, specify a value intermediate between the value set at [AL. 50 Overload 1], [AL. 51 Overload 2], [AL. E1 Overload warning 1], or [AL. EC Overload warning 2] and the value set at the magnetic pole detection alarm as the final setting value.

3) Perform the magnetic pole detection again with the final setting value.

(c) Setting example

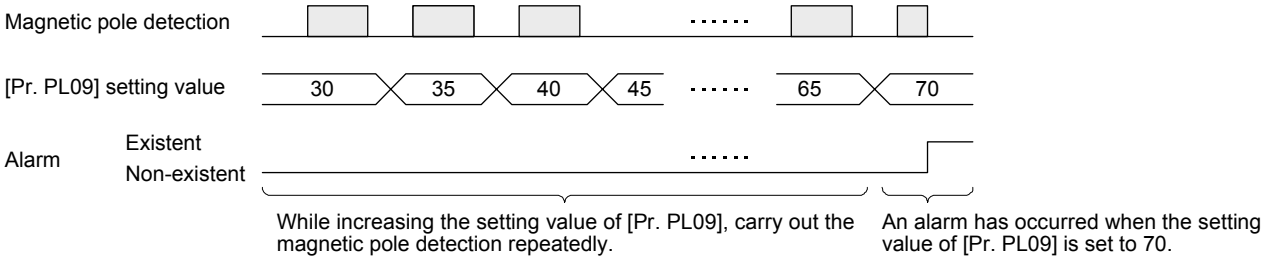

In this example, the final setting value of [Pr. PL09] is 49 (Setting value at the alarm occurrence = 70 × 0.7).

15.3.3 Operation from controller

To configure the absolute position detection system by using the direct drive motor, the battery unit (MR-BAT6V1SET) and the absolute position storage unit MR-BTAS01 are required.

(1) Operation method
For the incremental system, the magnetic pole detection is automatically performed at the first servo-on after the power-on. For this reason, when performing the positioning operation, create the sequence which surely confirms the servo-on status as the inter lock condition of the positioning command.
Also, some parameter settings and the home position return differ according to the controller type.

(2) Servo system controller setting
The following parameters will be enabled by cycling the servo amplifier power after the controller writes the parameters to the servo amplifier.

Setting item					Setting	
					Motion controller Q17_DSCPU	Simple motion module QD77MS_
Parameter	Amplifier setting				MR-J4-B DD	
	Motor setting				Automatic setting	
	No.	(Note) Symbol	Name	Initial value		
	PA01	**STY	Operation mode	1000h	1060h	
	PC01	*ERZ	Error excessive alarm level	0	Set the items as required.	
	PC03	*ENRS	Encoder output pulse selection	0000h		
	PL01	**LIT1	Linear servo motor/DD motor function selection 1	0301h		
	PL04	*LIT2	Linear servo motor/DD motor function selection 2	0003h		
	PL05	LB1	Position deviation error detection level	0		
	PL06	LB2	Speed deviation error detection level	0		
	PL07	LB3	Torque/thrust deviation error detection level	100		
	PL08	*LIT3	Linear servo motor/DD motor function selection 3	0010h		
	PL09	LPWM	Magnetic pole detection voltage level	30		
	PL17	LTSTS	Magnetic pole detection - Minute position detection method - Function selection	0000h		
	PL18	IDLV	Magnetic pole detection - Minute position detection method - Identification signal amplitude	0		

Note. The parameter whose symbol is preceded by * is enabled with the following conditions.
* : After setting the parameter, power off and on the servo amplifier or reset the controller.
**: After setting the parameter, power off and on the servo amplifier.

15.3.4 Function

(1) Servo control error detection function

POINT
●For the servo control error detection function, the position and speed deviation error detections are enabled by default. ([Pr. PL04]: _ _ _ 3)

If the servo control gets unstable for some reasons, the direct drive motor may not operate properly. To detect this state and to stop operation, the servo control error detection function is used as a protective function.
The servo control error detection function has three different detection methods: the position deviation, speed deviation, and torque deviation. An error is detected when each method is enabled with [Pr. PL04 Linear servo motor/DD motor function selection 2]. The detection level can be changed with [Pr. PL05], [Pr. PL06], and [Pr. PL07].

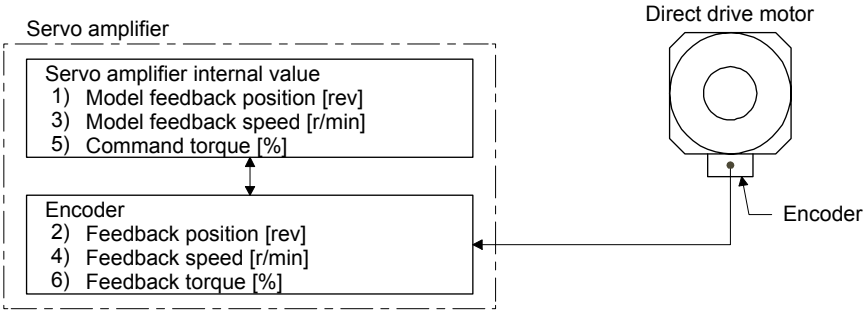

Figure 15.1 Outline of servo control error detection function

(a) Position deviation error detection
Set [Pr. PL04] to "_ _ _ 1" to enable the position deviation error detection.

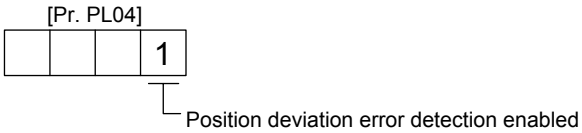

When you compare the model feedback position (1)) and the feedback position (2)) in figure 15.1, if the deviation is more than the value of [Pr. PL05 Position deviation error detection level] (1 (0.01 rev) to 1000 (10 rev)), [AL. 42.1 Servo control error by position deviation] will occur and the linear servo motor will stop. The initial value of this detection level is 0.09 rev. Replace the set value as required.

(b) Speed deviation error detection

Set [Pr. PL04] to "_ _ _ 2" to enable the speed deviation error detection.

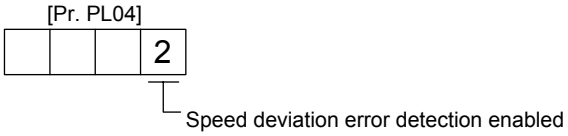

When you compare the model feedback speed (3)) and the feedback speed (4)) in figure 15.1, if the deviation is more than the value of [Pr. PL06 Speed deviation error detection level] (1 r/min to 2000 r/min), [AL. 42.2 Servo control error by speed deviation] will occur and the linear servo motor will stop. The initial value of this detection level is 100 r/min. Replace the set value as required.

(c) Torque deviation error detection level

Set [Pr. PL04] to "_ _ _ 4" to enable the torque deviation error detection.

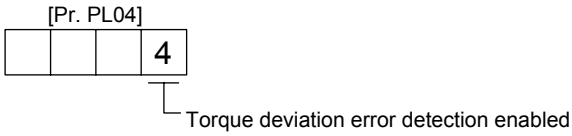

When you compare the command torque (5)) and the feedback torque (6)) in figure 15.1, if the deviation is more than the value of [Pr. PL07 Torque/thrust deviation error detection level] (1% to 1000%), [AL. 42.3 Servo control error by torque/thrust deviation] will occur and the linear servo motor will stop. The initial value of this detection level is 100%. Replace the set value as required.

(d) Detecting multiple deviation errors

When setting [Pr. PL04] as shown below, multiple deviation errors can be detected. For the error detection methods, refer to (1) (a), (b), (c) of this section.

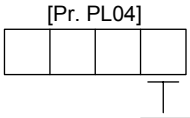

Setting value	Position deviation error detection	Speed deviation error detection	Torque deviation error detection
1	○		
2		○	
3	○	○	
4			○
5	○		○
6		○	○
7	○	○	○

15.4 Characteristics

15.4.1 Overload protection characteristics

An electronic thermal relay is built in the servo amplifier to protect the servo amplifier, the direct drive motor, and direct drive motor power wires from overloads.
[AL. 50 Overload 1] occurs if overload operation performed is above the electronic thermal relay protection curve shown in Fig. 15.2 [AL. 51 Overload 2] occurs if the maximum current is applied continuously for several seconds due to machine collision, etc. Use the equipment on the left-side area of the continuous or broken line in the graph.
When unbalanced torque is generated, such as in a vertical lift machine, it is recommended that the unbalanced torque of the machine be kept at 70% or less of the motor's rated torque.
This servo amplifier has solid-state direct drive motor overload protection for each axis. (The direct drive motor overload current (full load current) is set on the basis of 120% rated current of the servo amplifier.)

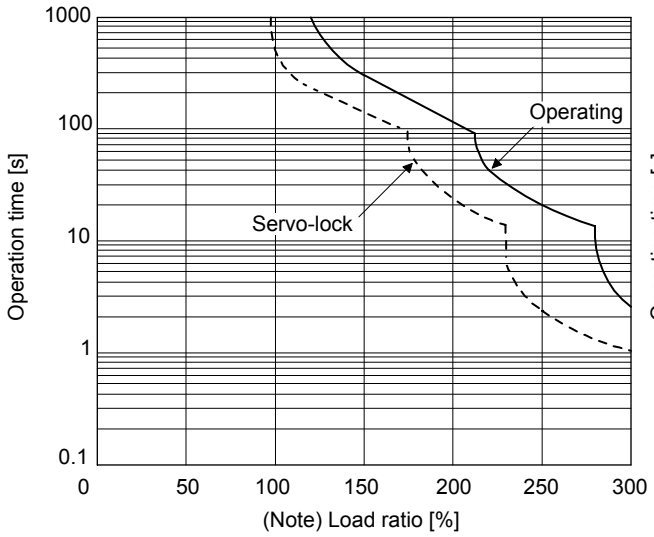

TM-RFM002C20, TM-RFM004C20,
TM-RFM006C20, TM-RFM006E20,
TM-RFM012E20, TM-RFM018E20,
TM-RFM012G20, TM-RFM040J10

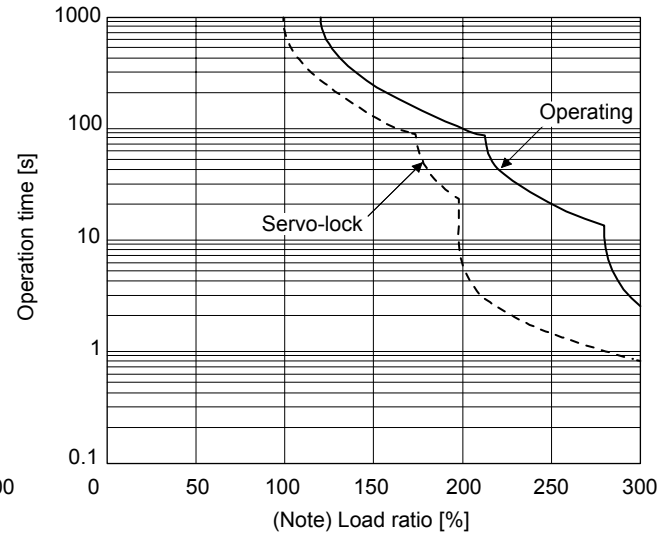

TM-RFM048G20, TM-RFM072G20,
TM-RFM120J10

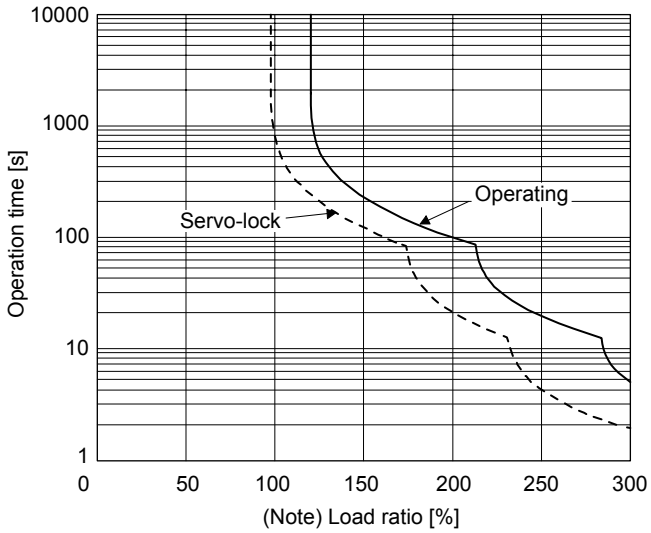

TM-RFM240J10

Note. If operation that generates torque more than 100% of the rating is performed with an abnormally high frequency in a direct drive motor stop status (servo-lock status) or in a 30 r/min or less low-speed operation status, the servo amplifier may malfunction regardless of the electronic thermal relay protection.

Fig. 15.2 Electronic thermal relay protection characteristics

15.4.2 Power supply capacity and generated loss

Table 15.1 indicates servo amplifiers' power supply capacities and losses generated under rated load. For thermal design of an enclosed type cabinet, use the values in the table in consideration for the worst operating conditions. The actual amount of generated heat will be intermediate between values at rated torque and servo-off according to the duty used during operation. When the servo motor is run at less than the rated speed, the power supply capacity will be smaller than the value in the table, but the servo amplifier's generated heat will not change.

Table 15.1 Power supply capacity and generated loss per direct drive motor at rated output

Servo motor	Power supply capacity [kVA]	Servo amplifier-generated heat [W]		Area required for heat dissipation [m^2]
		At rated output	With servo-off	
TM-RFM002C20	0.25	25	15	0.5
TM-RFM004C20	0.38	35	15	0.7
TM-RFM006C20	0.53	40	15	0.8
TM-RFM006E20	0.46	40	15	0.8
TM-RFM012E20	0.81	50	15	1.0
TM-RFM018E20	1.3	50	15	1.0
TM-RFM012G20	0.71	50	15	1.0
TM-RFM048G20	2.7	90	20	1.8
TM-RFM072G20	3.8	110	20	2.2
TM-RFM040J10	1.2	50	15	1.0
TM-RFM120J10	3.4	90	20	1.8
TM-RFM240J10	6.6	160	25	3.2

15.4.3 Dynamic brake characteristics

> **POINT**
>
> ●Do not use dynamic brake to stop in a normal operation as it is the function to stop in emergency.
>
> ●For a machine operating at the recommended load to motor inertia ratio or less, the estimated number of usage times of the dynamic brake is 1000 times while the machine decelerates from the rated speed to a stop once in 10 minutes.
>
> ●Be sure to enable EM1 (Forced stop 1) after the direct drive motor stops when using EM1 (Forced stop 1) frequently in other than emergency.

(1) Dynamic brake operation

(a) Calculation of coasting distance

Fig. 15.3 shows the pattern in which the servo motor comes to a stop when the dynamic brake is operated. Use equation 15.1 to calculate an approximate coasting distance to a stop. The dynamic brake time constant τ varies with the direct drive motor and machine operation speeds. (Refer to (1) (b) of this section.)

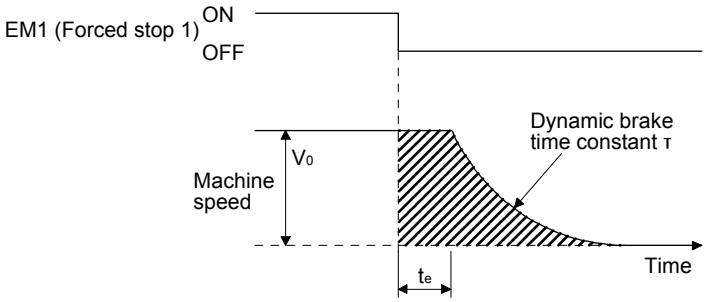

Fig. 15.3 Dynamic brake operation diagram

$$L_{max} = \frac{V_0}{60} \cdot \left\{ t_e + T\left(1 + \frac{J_L}{J_M}\right) \right\} \quad \cdots\cdots (15.1)$$

L_{max}: Maximum coasting distance [mm]

V_0: Machine's fast feed speed [mm/min]

J_M: Moment of inertia of direct drive motor [kg•cm^2]

J_L: Load moment of inertia converted into equivalent value on direct drive motor rotor [kg•cm^2]

τ: Dynamic brake time constant [s]

t_e: Delay time of control section [s]

There is internal relay delay time of about 10 ms.

(b) Dynamic brake time constant

The following shows necessary dynamic brake time constant τ for equation 15.1.

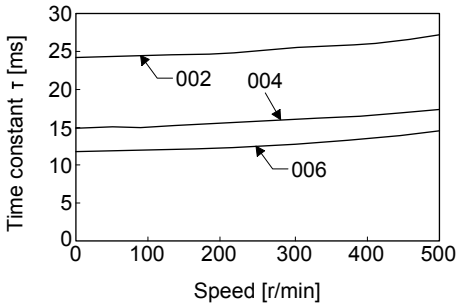

TM-RFM_C20

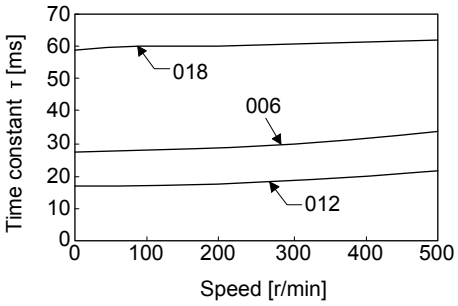

TM-RFM_E20

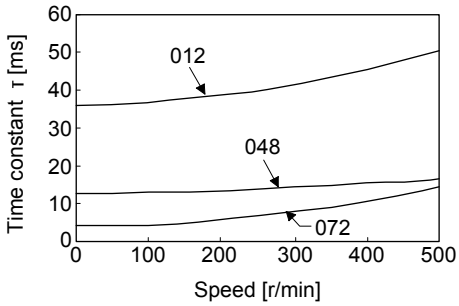

TM-RFM_G20

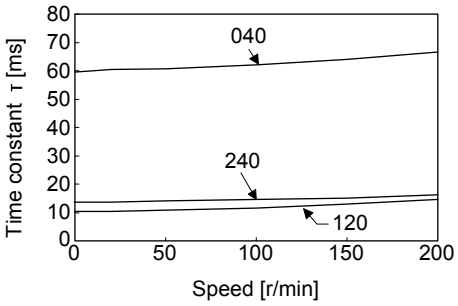

TM-RFM_J10

(2) Permissible load to motor inertia ratio when the dynamic brake is used

Use the dynamic brake under the load to motor inertia ratio indicated in the following table. If the load inertia moment is higher than this value, the dynamic brake may burn. If the load to motor inertia ratio exceeds the indicated value, contact your local sales office.

The values of the permissible load to motor inertia ratio in the table are the values at the maximum rotation speed of the direct drive motor.

The value in the parenthesis shows the value at the rated speed of the direct drive motor.

Direct drive motor	Permissible load to motor inertia ratio [multiplier]
TM-RFM_C20	100 (300)
TM-RFM_E20	
TM-RFM_G20	50 (300)
TM-RFM_J10	50 (200)

MEMO

16. FULLY CLOSED LOOP SYSTEM

POINT

- The fully closed loop system is available for the servo amplifiers of which software version is A3 or above.
- When fully closed loop control system is used with this servo amplifier, "Linear Encoder Instruction Manual" is needed.
- Fully closed loop control system is available with position control mode.
- When fully closed loop control system is configured with MR-J4-_B_ servo amplifier, the following restrictions apply. However, these restrictions will not be applied for MR-J4-_B_-RJ servo amplifiers.
  - A/B/Z-phase differential output type encoder cannot be used.
  - The load-side encoder and servo motor encoder is compatible with only the two-wire type. The four-wire type load-side encoder and servo motor encoder cannot be used.
  - When you use the KG-KR and HG-MR series for driving and load-side encoder, the optional four-wire type encoder cables (MR-EKCBL30M-L, MR-EKCBL30M-H, MR-EKCBL40M-H, and MR-EKCBL50M-H) cannot be used. When an encoder cable of 30 m to 50 m is needed, fabricate a two-wire type encoder cable according to appendix 9.

16.1 Functions and configuration

16.1.1 Function block diagram

A fully closed loop control block diagram is shown below. The fully closed loop system is controlled in the load-side encoder unit.

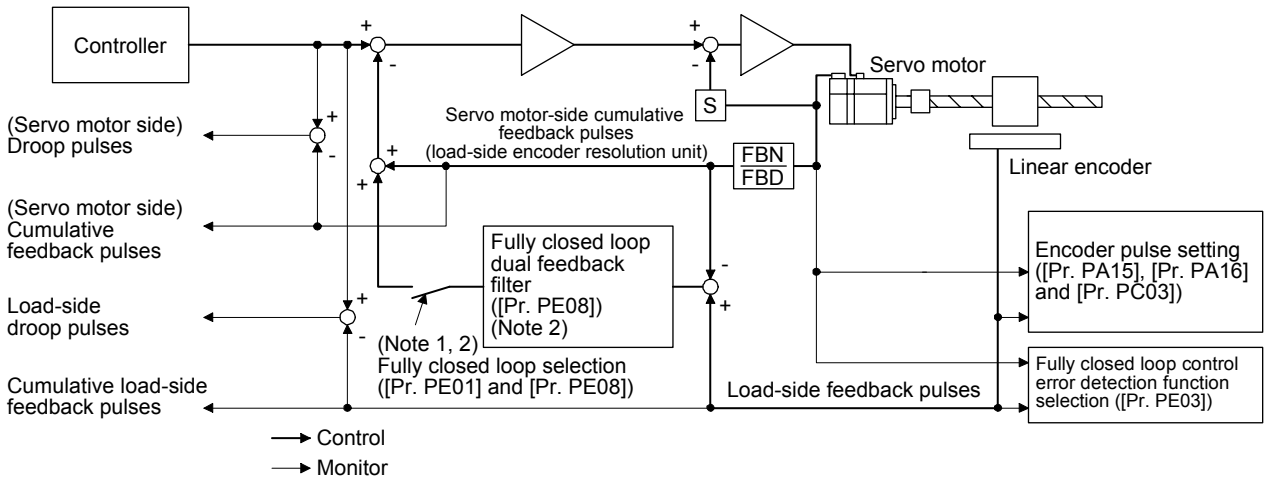

Note 1. Switching between semi closed loop control and fully closed loop control can be performed by changing the setting of [Pr. PE01].
When semi closed loop control is selected, a control is always performed on the bases of the position data of the servo motor encoder independently of whether the servo motor is at a stop or running.

2. When the fully closed loop system is enabled in [Pr. PE01], dual feedback control in which the servo motor feedback signal and load-side encoder feedback signal are combined by the dual feedback filter in [Pr. PE08] is performed.
In this case, fully closed loop control is performed when the servo motor is at a stop, and semi closed loop control is performed when the servo motor is operating to improve control performance. When "4500" is set as the filter value of [Pr. PE08 Dual feedback filter], fully closed loop control is always performed.

The following table shows the functions of each control mode.

Control	Description	
Semi closed loop control	Feature	Position is controlled according to the servo motor-side data.
	Advantage	Since this control is insusceptible to machine influence (such as machine resonance), the gains of the servo amplifier can be raised and the settling time shortened.
	Disadvantage	If the servo motor side is at a stop, the side may be vibrating or the load-side accuracy not obtained.
Dual feedback control	Feature	Position is controlled according to the servo motor-side data and load-side data.
	Advantage	Control is performed according to the servo motor-side data during operation, and according to the load side-data at a stop in sequence to raise the gains during operation and shorten the settling time. A stop is made with the load-side accuracy.
Fully closed loop control	Feature	Position is controlled according to the load-side data.
	Advantage	The load-side accuracy is obtained not only at a stop but also during operation.
	Disadvantage	Since this control is susceptible to machine resonance or other influences, the gains of the servo amplifier may not rise.

16.1.2 Selecting procedure of control mode

(1) Control mode configuration

In this servo, a semi closed loop system or fully closed loop system can be selected as a control system. In addition, on the fully closed loop system, the semi closed loop control, fully closed loop control and dual feedback control can be selected by the [Pr. PE08] settings.

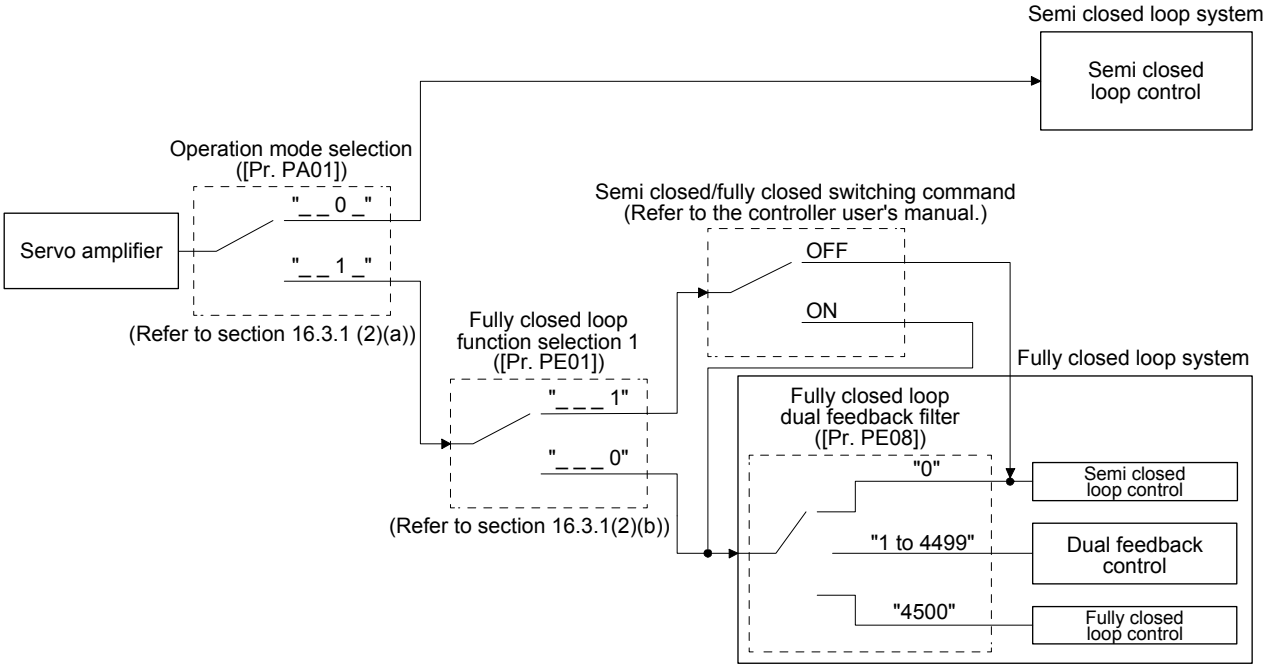

(2) Dual feedback filter equivalent block diagram

A dual feedback filter equivalent block diagram on the dual feedback control is shown below.

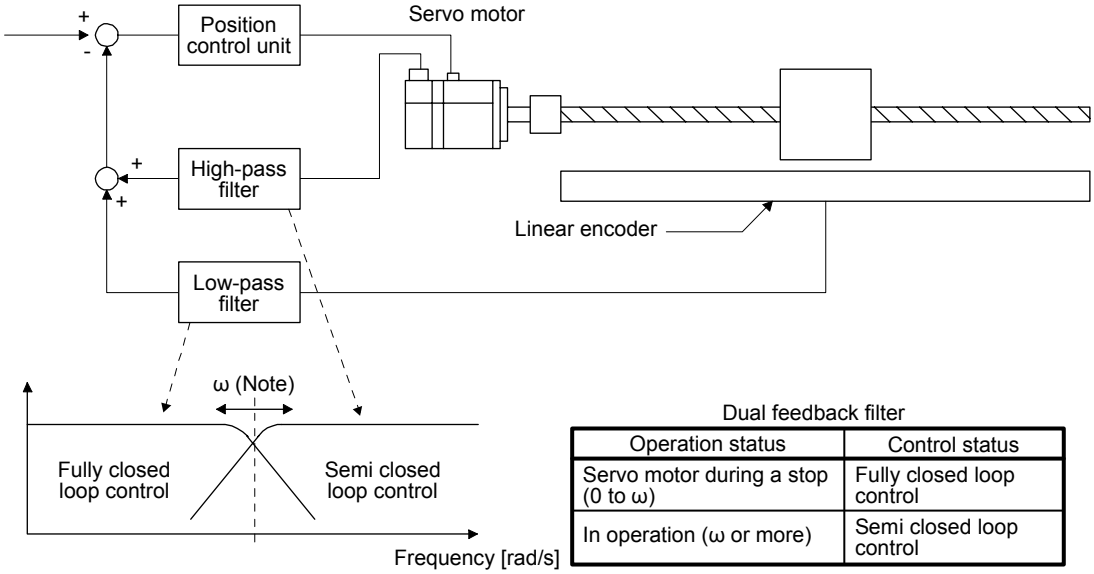

Dual feedback filter

Operation status	Control status
Servo motor during a stop (0 to ω)	Fully closed loop control
In operation (ω or more)	Semi closed loop control

Note. "ω" (a dual feedback filter band) is set by [Pr. PE08].

16.1.3 System configuration

(1) For a linear encoder

(a) MR-J4-_B_ servo amplifier

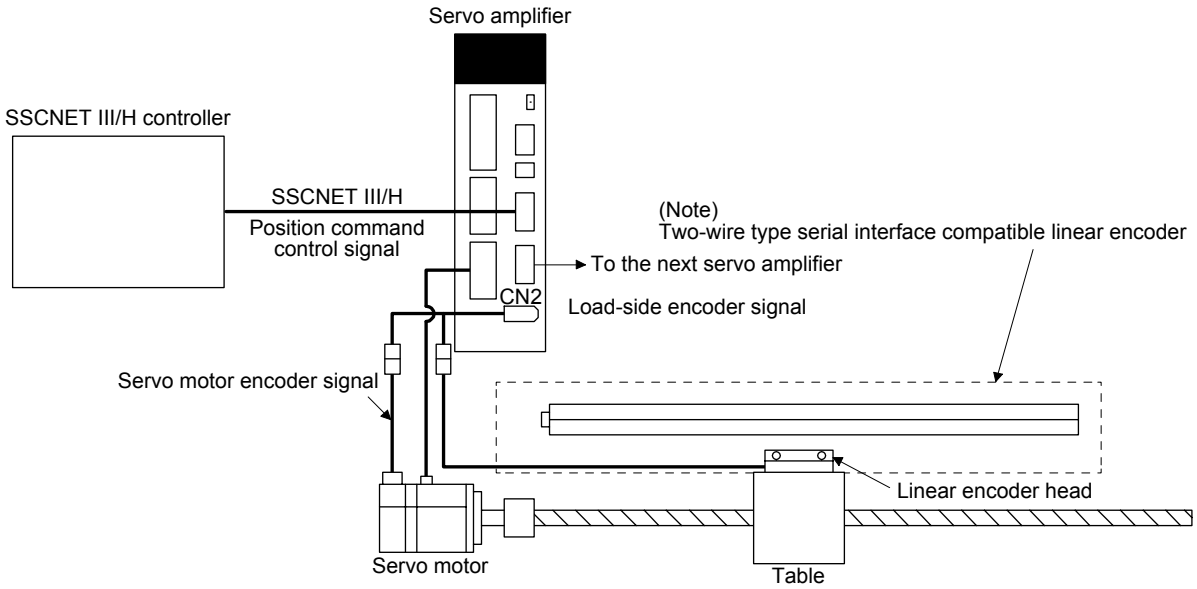

Note. Applicable for the absolute position detection system when an absolute position linear encoder is used.
In that case, a battery is not required.

(b) MR-J4-_B_-RJ servo amplifier

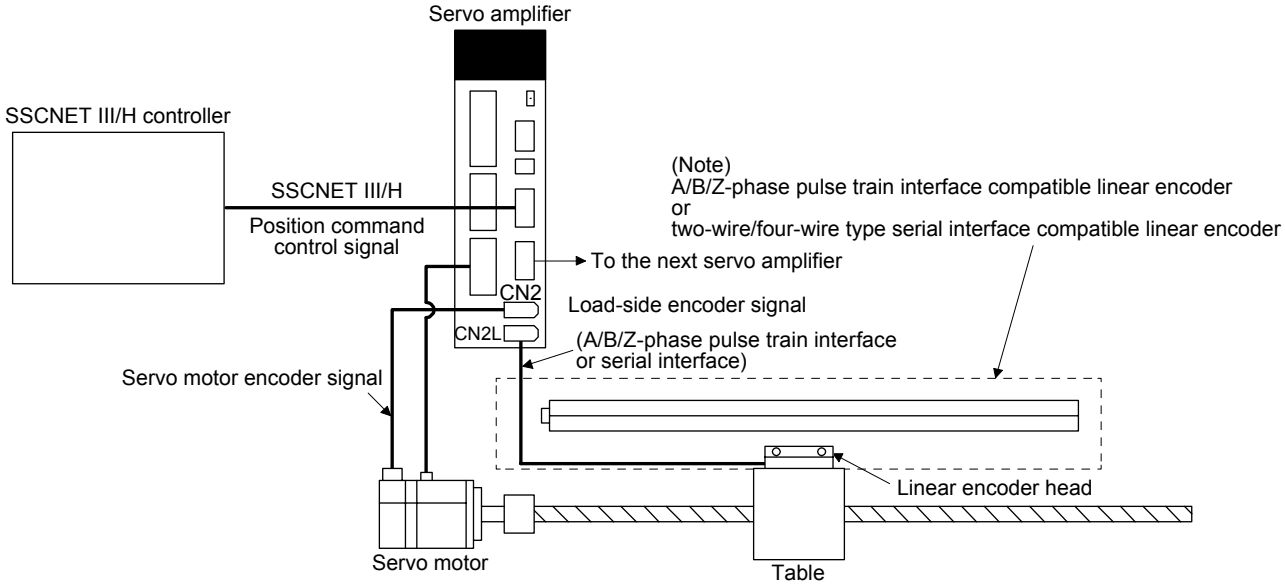

Note. Applicable for the absolute position detection system when an absolute position linear encoder is used.
In that case, a battery is not required.

(2) For a rotary encoder

(a) MR-J4-_B_ servo amplifier

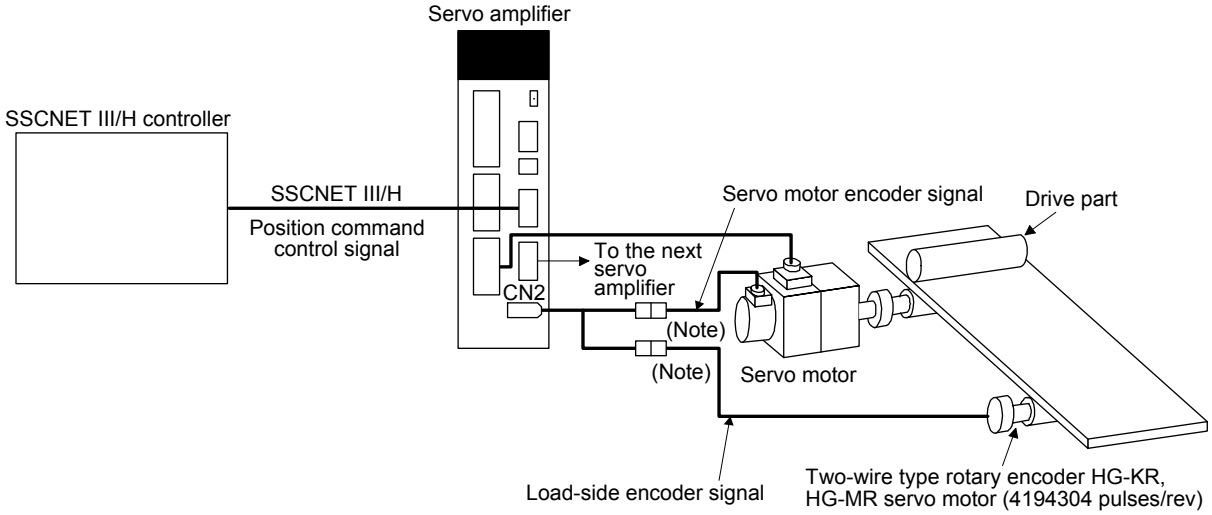

Note. Use a two-wire type encoder cable. A four-wire type linear encoder cable cannot be used.

(b) MR-J4-_B_-RJ servo amplifier

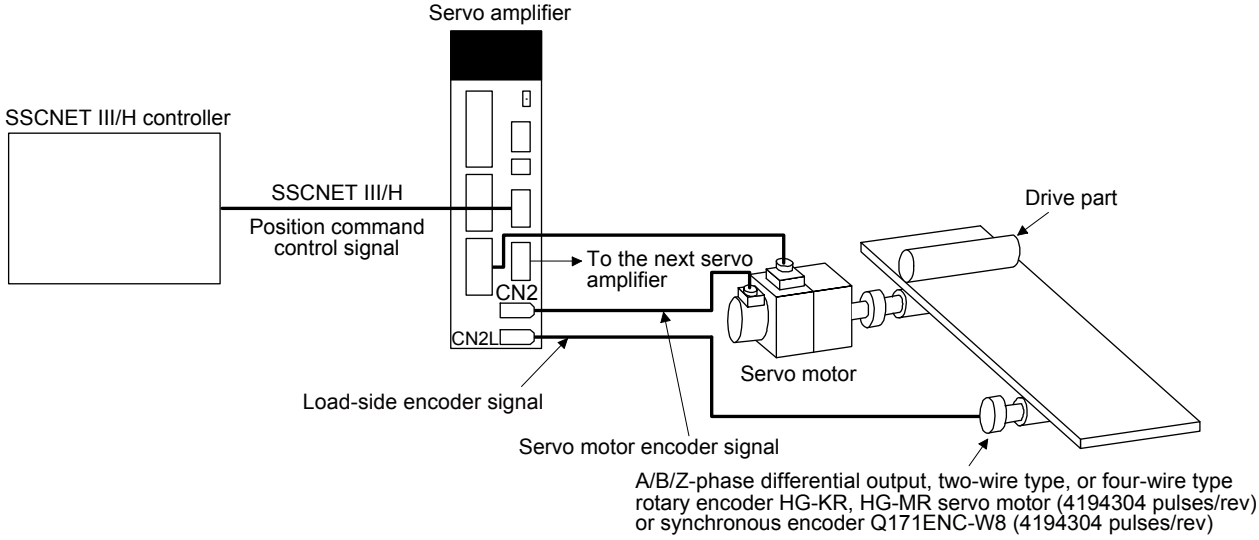

16.2 Load-side encoder

POINT
●Always use the load-side encoder cable introduced in this section. Using other products may cause a malfunction. ●For details of the load-side encoder specifications, performance and assurance, contact each encoder manufacturer.

16.2.1 Linear encoder

Refer to "Linear Encoder Instruction Manual" for usable linear encoders.

16.2.2 Rotary encoder

When a rotary encoder is used for the load-side encoder, use HG-KR or HG-MR servo motor as an encoder. Use a two-wire type encoder cable for MR-J4-_B_ servo amplifiers. Do not use MR-EKCBL30M-L, MR-EKCBL30M-H, MR-EKCBL40M-H, or MR-EKCBL50M-H as they are four-wire type.

16.2.3 Configuration diagram of encoder cable

Configuration diagram for servo amplifier and load-side encoder is shown below. Cables used vary, depending on the load-side encoder.

(1) Linear encoder
Refer to "Linear Encoder Instruction Manual" for encoder cables for linear encoder.

(a) MR-J4-_B_ servo amplifier

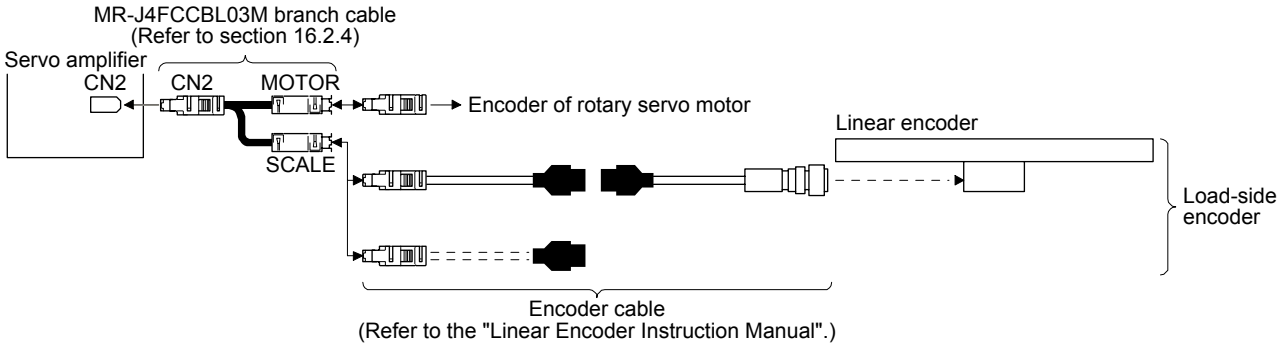

(b) MR-J4-_B_-RJ servo amplifier
You can connect the linear encoder without using a branch cable shown in (a) for MR-J4-_B_-RJ servo amplifier. You can also use a four-wire type linear encoder.

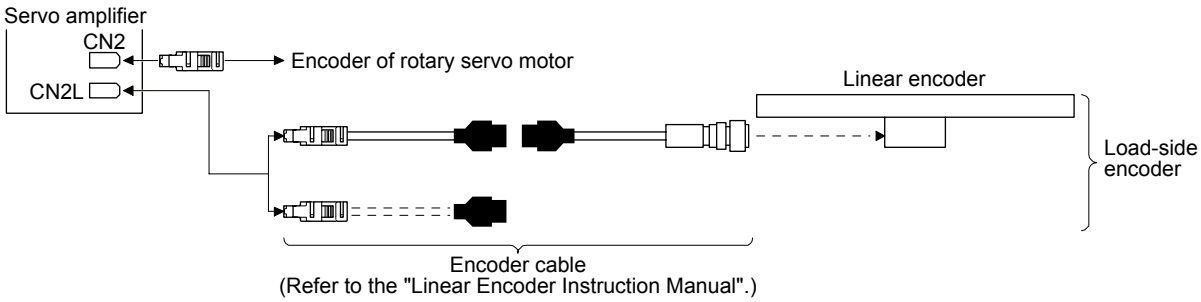

(2) Rotary encoder

(a) MR-J4-_B_ servo amplifier

Refer to "Linear Encoder Instruction Manual" for encoder cables for rotary encoder.

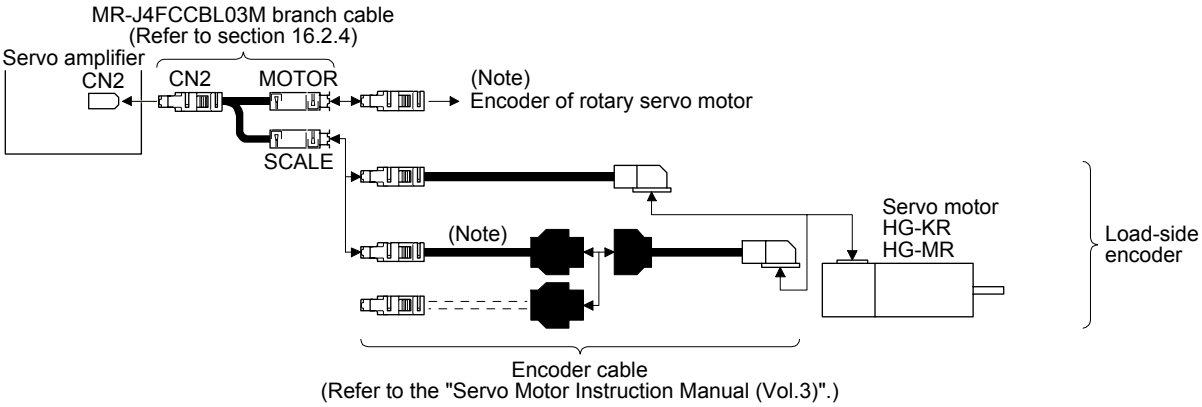

Note. Use a two-wire type encoder cable. A four-wire type linear encoder cable cannot be used.

(b) MR-J4-_B_-RJ servo amplifier

You can connect the linear encoder without using a branch cable shown in (a) for MR-J4-_B_-RJ servo amplifier. You can also use a four-wire type linear encoder.

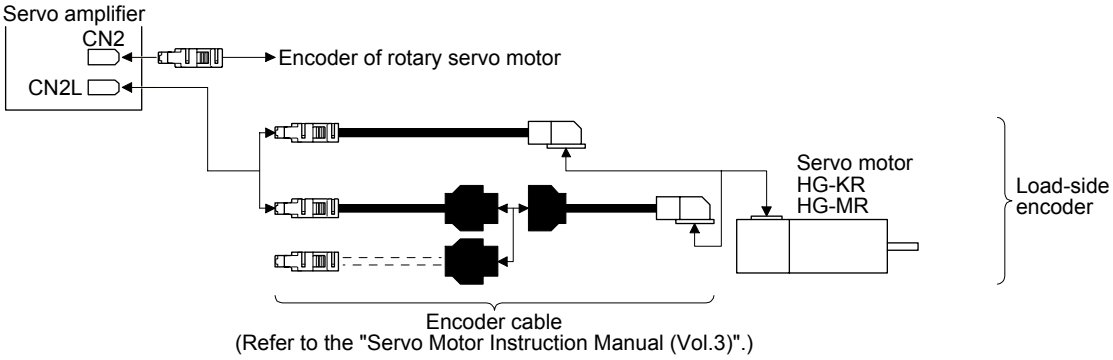

16.2.4 MR-J4FCCBL03M branch cable

Use MR-J4FCCBL03M branch cable to connect the rotary encoder and the load-side encoder to CN2 connector.
When fabricating the branch cable using MR-J3THMCN2 connector set, refer to "Linear Encoder Instruction Manual".

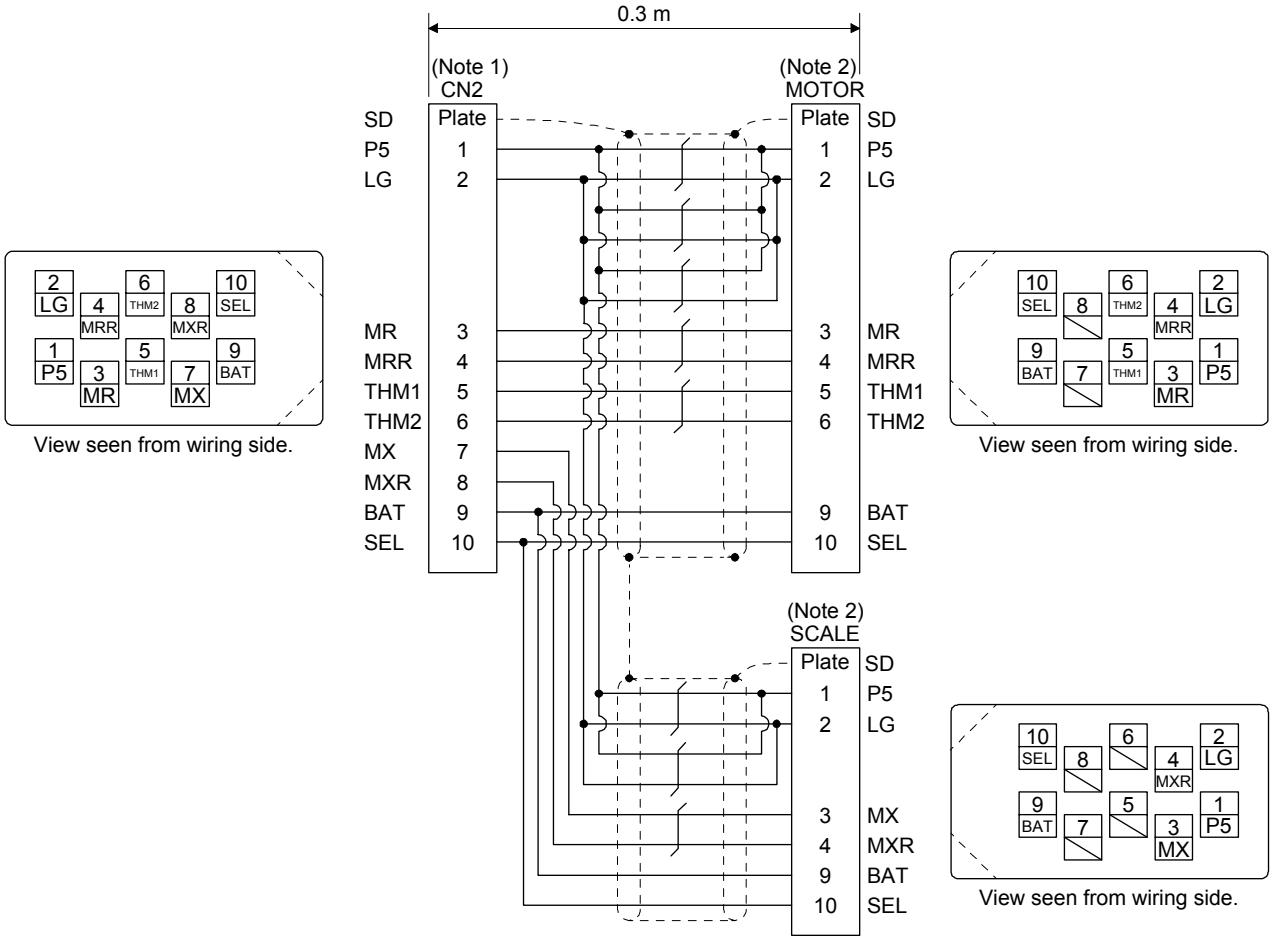

Note 1. Receptacle: 36210-0100PL, shell kit: 36310-3200-008 (3M)
2. Plug: 36110-3000FD, shell kit: 36310-F200-008 (3M)

16.3 Operation and functions

16.3.1 Startup

(1) Startup procedure

Start up the fully closed loop system in the following procedure.

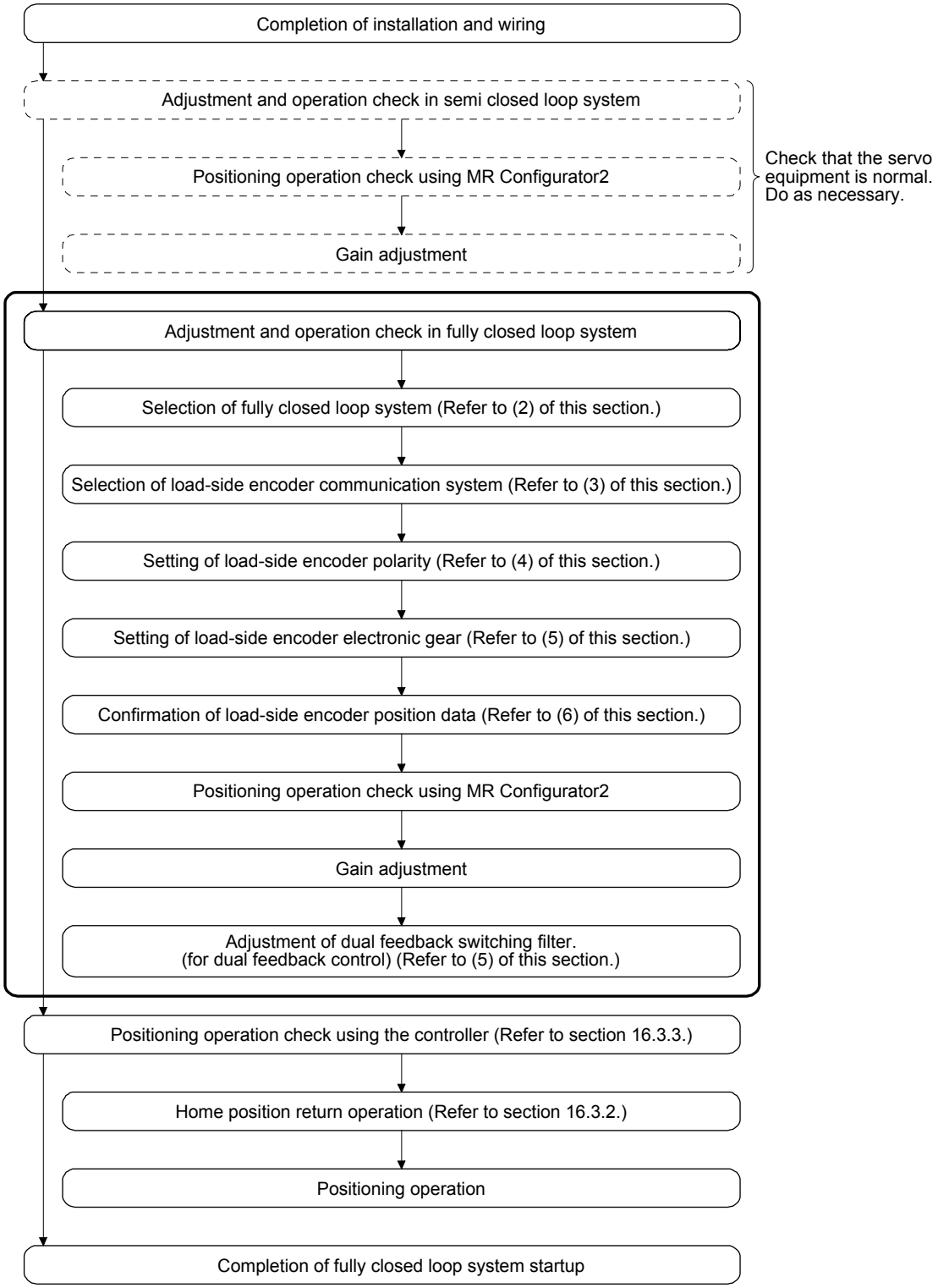

(2) Selection of fully closed loop system

By setting [Pr. PA01], [Pr. PE01] and the control command of controller, the control method can be selected as shown in the following table.

[Pr. PA01]	[Pr. PE01]	Semi closed loop control/ fully closed loop control switching signal	Command unit	Control System	Absolute position detection system
"_ _ 0 _" Semi closed loop system (standard control mode)			Servo motor encoder unit	Semi closed loop control	○
"_ _ 1 _" Fully closed loop system (fully closed loop control mode)	"_ _ _ 0"		Load-side encoder unit	Dual feedback control (fully closed loop control)	○ (Note)
	"_ _ _ 1"	Off		Semi closed loop control	×
		On		Dual feedback control (fully closed loop control)	×

Note. Applicable when the load-side encoder is set as the absolute position encoder.

(a) Operation mode selection

Select a operation mode.

[Pr. PA01]

1	0		0

Operation mode selection

Set value	Operation mode	Control unit
0	Semi closed loop system (Standard control mode)	Servo motor-side resolution unit
1	Fully closed loop system (Fully closed loop control mode)	Load-side encoder resolution unit

(b) Semi closed loop control/fully closed loop control selection

Select the semi closed loop control/fully closed loop control.

[Pr. PE01]

0	0	0	

Fully closed loop control selection
0: Always enabled
1: Switching using the control command of controller
(switching between semi closed/fully closed)

Selection using the control command of controller	Control method
OFF	Semi closed loop control
ON	Fully closed loop control

When the operation mode selection in [Pr. PA01] is set to "_ _ 1 _" (fully closed loop system), this setting is enabled.

(3) Selection of load-side encoder communication method

The communication method changes depending on the load-side encoder type. Refer to table 1.1 and "Linear Encoder Instruction Manual" for the communication method for each load-side encoder.
Select the cable to be connected to CN2L connector in [Pr. PC04].

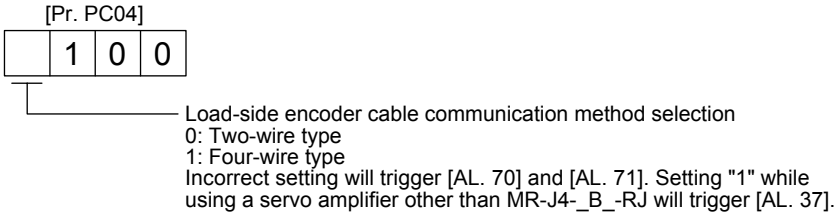

(4) Setting of load-side encoder polarity

⚠CAUTION	●Do not set an incorrect direction to "Encoder pulse count polarity selection" in [Pr. PC27]. An abnormal operation and a machine collision may occur if an incorrect direction is set, which cause a fault and parts damaged.

POINT

●"Encoder pulse count polarity selection" in [Pr. PC27] is not related to [Pr. PA14 Rotation direction selection]. Make sure to set the parameter according to the relationships between servo motor and linear encoder/rotary encoder.

●Do not set an incorrect direction to "Encoder pulse count polarity selection" in [Pr. PC27]. Doing so may cause [AL. 42 Fully closed loop control error] during the positioning operation.

(a) Parameter setting method

Set the load-side encoder polarity to be connected to CN2L connector in order to match the CCW direction of servo motor and the increasing direction of load-side encoder feedback.

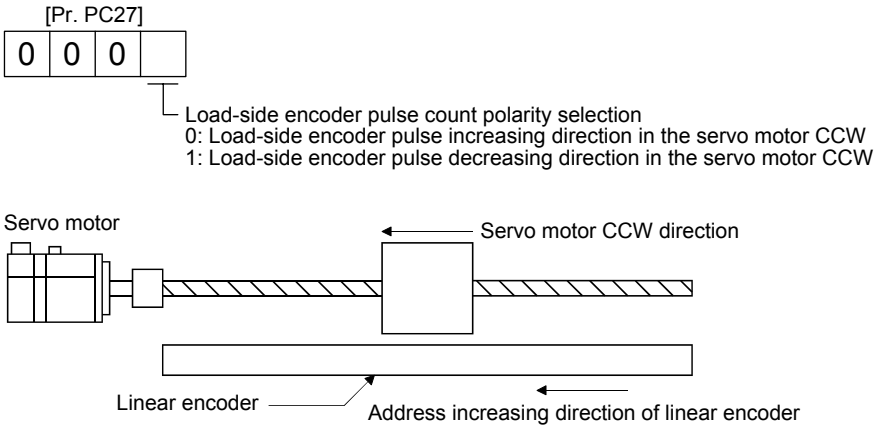

(b) How to confirm the load-side encoder feedback direction

For the way of confirming the load-side encoder feedback direction, refer to (6) in this section.

(5) Setting of feedback pulse electronic gear

> POINT
>
> ●If an incorrect value is set in the feedback pulse electronic gear ([Pr. PE04], [Pr. PE05], [Pr. PE34], and [Pr. PE35]), [AL. 37 Parameter error] and an abnormal operation may occur. Also, it may cause [AL. 42.8 Fully closed loop control error by position deviation] during the positioning operation.

The numerator ([Pr. PE04] and [Pr. PE34]) and denominator ([Pr. PE05] and [Pr. PE35]) of the electronic gear are set to the servo motor-side encoder pulse. Set the electronic gear so that the number of servo motor encoder pulses per servo motor revolution is converted to the number of load-side encoder pulses. The relational expression is shown below.

$$\frac{[\text{Pr. PE04}] \times [\text{Pr. PE34}]}{[\text{Pr. PE05}] \times [\text{Pr. PE35}]} = \frac{\text{Number of motor encoder pulses per servo motor revolution}}{\text{Number of load side encoder pulses per servo motor revolution}}$$

Select the load-side encoder so that the number of load-side encoder pulses per servo motor revolution is within the following range.

$4096(2^{12}) \leq$ Number of load-side encoder pulses per servo motor revolution $\leq 67108864\ (2^{26})$

(a) When the servo motor is directly coupled with a ball screw and the linear encoder resolution is 0.05 μm

Conditions
Servo motor resolution: 4194304 pulses/rev
Servo motor reduction ratio: 1/11
Ball screw lead: 20 mm
Linear encoder resolution: 0.05 μm

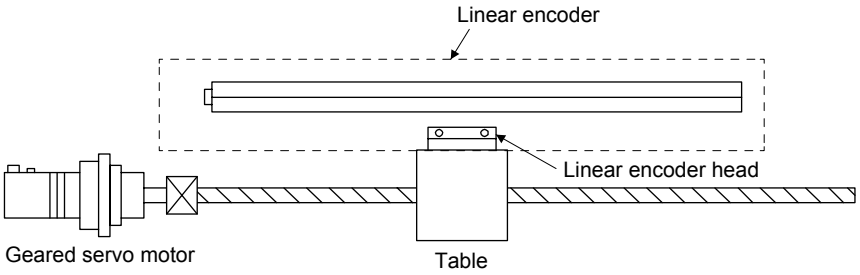

Calculate the number of linear encoder pulses per ball screw revolution.

Number of linear encoder pulses per ball screw revolution
= Ball screw lead/linear encoder resolution
= 20 mm/0.05 μm = 400000 pulses

$$\frac{[\text{Pr. PE04}] \times [\text{Pr. PE34}]}{[\text{Pr. PE05}] \times [\text{Pr. PE35}]} = \frac{400000}{4194304} \times \frac{1}{11} = \frac{3125}{32768} \times \frac{1}{11}$$

(b) Setting example when using the rotary encoder for the load-side encoder of roll feeder

Conditions
Servo motor resolution: 4194304 pulses/rev
Pulley diameter on the servo motor side: 30 mm
Pulley diameter on the rotary encoder side: 20 mm
Rotary encoder resolution: 4194304 pulse/rev

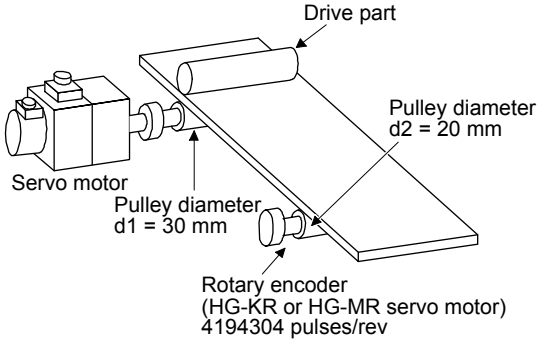

When the pulley diameters or reduction ratios differ, consider that in calculation.

$$\frac{[\text{Pr. PE04}] \times [\text{Pr. PE34}]}{[\text{Pr. PE05}] \times [\text{Pr. PE35}]} = \frac{4194304 \times 30}{4194304 \times 20} = \frac{1}{1} \times \frac{3}{2}$$

(6) Confirmation of load-side encoder position data
Check the load-side encoder mounting and parameter settings for any problems.

> POINT
> ●Depending on the check items, MR Configurator2 may be used.
> Refer to section 16.3.9 for the data displayed on the MR Configurator2.

When checking the following items, the fully closed loop control mode must be set. For the setting of control mode, refer to (2) in this section.

No.	Check item	Confirmation method and description
1	Read of load-side encoder position data	With the load-side encoder in a normal state (mounting, connection, etc.), the load-side cumulative feedback pulses value is counted normally when the load-side encoder is moved. 1. An alarm occurred. 2. The installation of the load-side encoder was not correct. 3. The encoder cable was not wired correctly.
2	Read of load-side encoder scale home position (reference mark, Z-phase)	With the home position (reference mark, or Z-phase) of the load-side encoder in a normal condition (mounting, connection, etc.), the value of load-side encoder information 1 is cleared to 0 when the home position (reference mark, or Z-phase) is passed through by moving the load-side encoder. 1. The installation of the load-side encoder was not correct. 2. The encoder cable was not wired correctly.
3	Confirmation of load-side encoder feedback direction (Setting of load-side encoder polarity)	Confirm that the directions of the cumulative feedback pulses of servo motor encoder (after gear) and the load-side cumulative feedback pulses are matched by moving the device (load-side encoder) manually in the servo-off status. If mismatched, reverse the polarity.
4	Setting of load-side encoder electronic gear	When the servo motor and load-side encoder operate synchronously, the servo motor-side cumulative feedback pulses (after gear) and load-side cumulative feedback pulses are matched and increased. If mismatched, review the setting of fully closed loop control feedback electronic gear ([Pr. PE04], [Pr. PE05], [Pr. PE34], and [Pr. PE35]) with the following method. 1) Check the servo motor-side cumulative feedback pulses (before gear). 2) Check the load-side cumulative feedback pulses. 3) Check that the ratio of above 1) and 2) has been that of the feedback electronic gear. 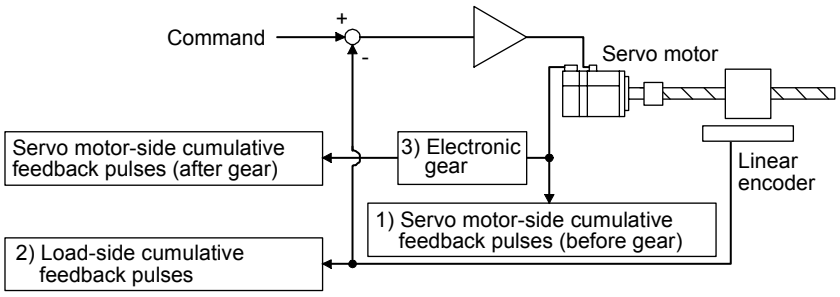

(7) Setting of fully closed loop dual feedback filter

With the initial value (setting = 10) set in [Pr. PE08 Fully closed loop dual feedback filter the dual feedback filter], make gain adjustment by auto tuning, etc. as in semi closed loop control. While observing the servo operation waveform with the graph function, etc. of MR Configurator2, adjust the dual feedback filter.

The dual feedback filter operates as described below depending on the setting.

[Pr. PE08] setting	Control mode	Vibration	Settling time
0	Semi closed loop		
1 to 4499	Dual feedback	Not frequently occurs to Frequently occurs	Long time to Short time
4500	Fully closed loop		

Increasing the dual feedback filter setting shortens the settling time, but increases servo motor vibration since the motor is more likely to be influenced by the load-side encoder vibration. The maximum setting of the dual feedback filter should be less than half of the PG2 setting.

Reduction of settling time: Increase the dual feedback filter setting.

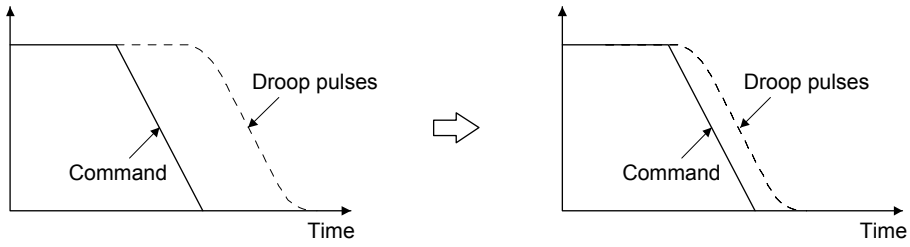

Suppression of vibration: Decrease the dual feedback filter setting.

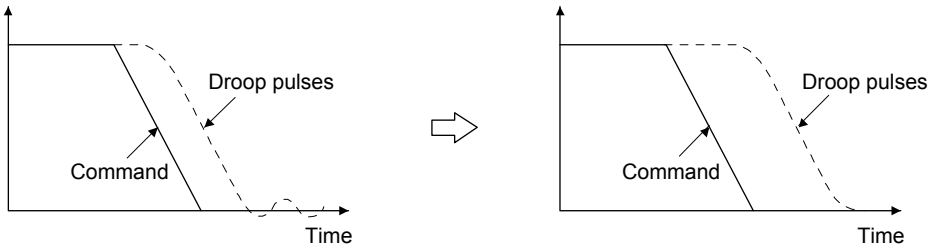

16.3.2 Home position return

(1) General instruction

Home position return is all performed according to the load-side encoder feedback data, independently of the load-side encoder type. It is irrelevant to the Z-phase position of the servo motor encoder. In the case of a home position return using a dog signal, the scale home position (reference mark) must be passed through when an incremental type linear encoder is used, or the Z-phase be passed through when a rotary encoder is used, during a period from a home position return start until the dog signal turns off.

(2) Load-side encoder types and home position return methods

(a) About proximity dog type home position return using absolute type linear encoder

When an absolute type linear encoder is used, the home position reference position is the position per servo motor revolution to the linear encoder home position (absolute position data = 0).

In the case of a proximity dog type home position return, the nearest position after proximity dog off is the home position.

The linear encoder home position may be set in any position.

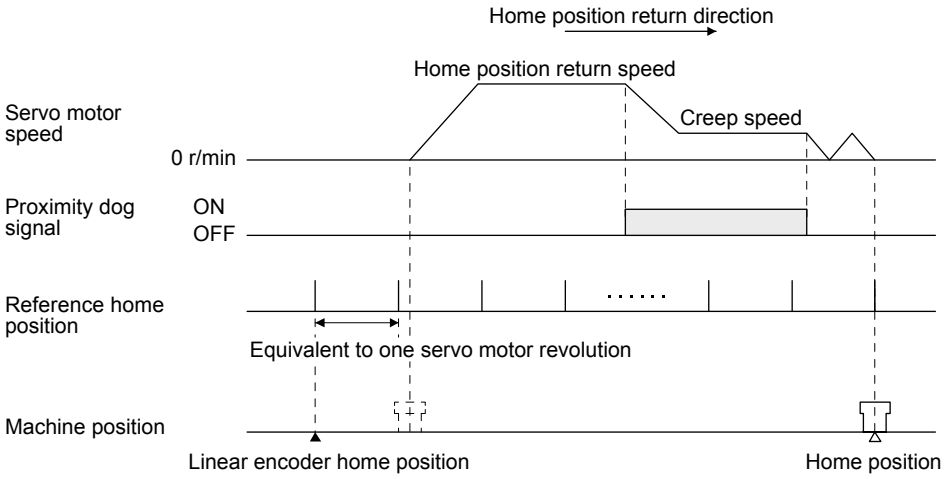

(b) About proximity dog type home position return using incremental linear encoder

1) When the linear encoder home position (reference mark) exists in the home position return direction

When an incremental linear encoder is used, the home position is the position per servo motor revolution to the linear encoder home position (reference mark) passed through first after a home position return start.

In the case of a proximity dog type home position return, the nearest position after proximity dog off is the home position.

Set one linear encoder home position in the full stroke, and set it in the position that can always be passed through after a home position return start.

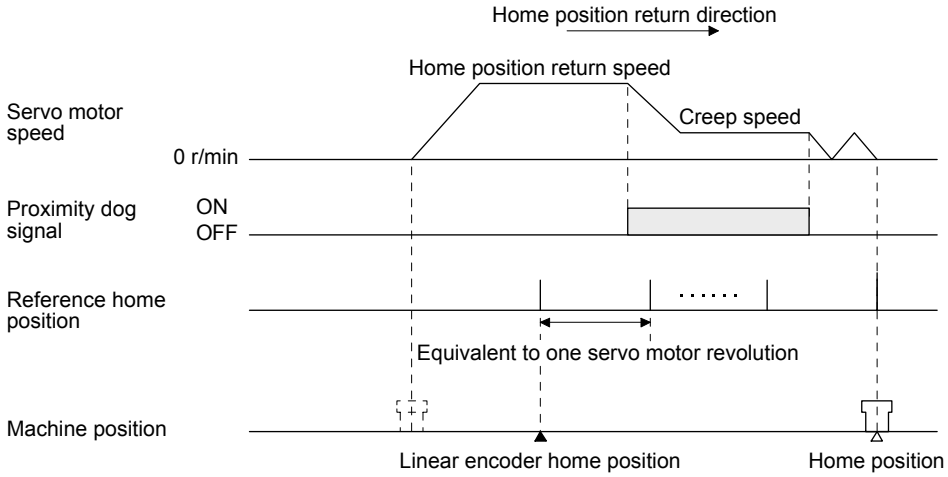

2) When the linear encoder home position does not exist in the home position return direction

If the home position return is performed from the position where the linear encoder home position (reference mark) does not exist, a home position return error occurs on the controller side. The error contents differ according to the controller type. When starting a home position return at the position where the linear encoder home position (reference mark) does not exist in the home position return direction, move the axis up to the stroke end on the side opposite to the home position return direction by JOG operation, etc. of the controller once, then make a home position return.

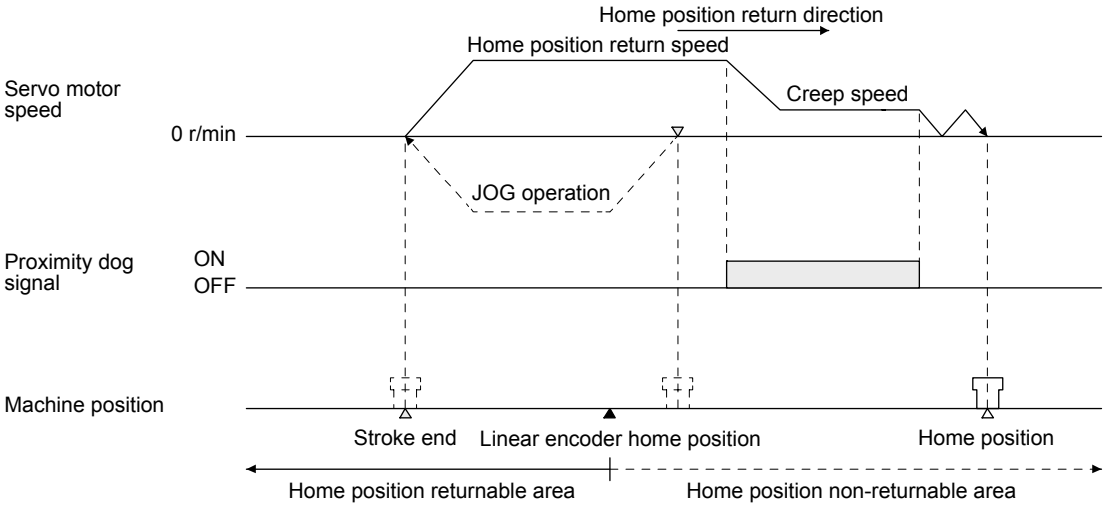

POINT

- To execute a home position return securely, start a home position return after moving the axis to the opposite stroke end by jog operation, etc. of the controller.
- A home position return cannot be made if the incremental linear encoder does not have a linear encoder home position (reference mark). Always provide a linear encoder home position (reference mark). (one place in the fully stroke)

(c) About dog type home position return when using the rotary encoder of a serial communication servo motor

The home position for when using the rotary encoder of a serial communication servo motor for the load-side encoder is at the load-side Z-phase position.

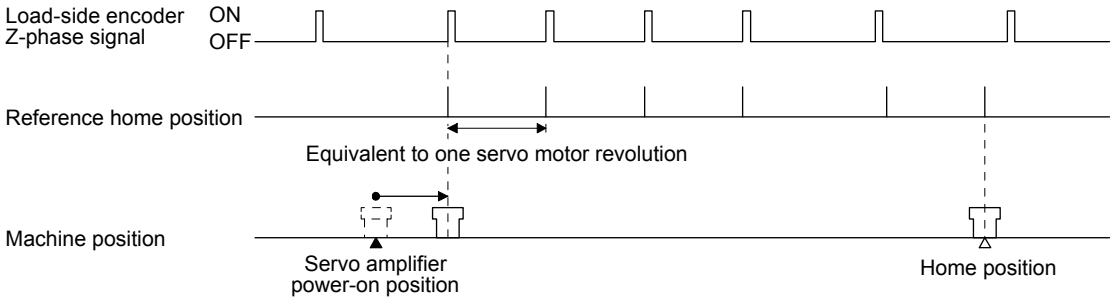

(b) About data setting type (Common to all load-side encoders)

In the data setting type home position return method, pass through a scale home position (reference mark) and the Z-phase signal of the rotary encoder, and then make a home position return.

When the machine has no distance of one servo motor encoder revolution until the Z-phase of the rotary encoder is passed through, a home position return can be made by changing the home position setting condition selection in [Pr. PC17] if the home position is not yet passed through.

16.3.3 Operation from controller

The fully closed loop control compatible servo amplifier can be used with any of the following controllers.

Category	Model	Remarks
Motion controller	Q17nDSCPU	Speed control (II) instructions (VVF and VVR) cannot be used.
Simple motion module	QD77MS_	

An absolute type linear encoder is necessary to configure an absolute position detection system under fully closed loop control using a linear encoder. In this case, the encoder battery need not be installed to the servo amplifier. When an rotary encoder is used, an absolute position detection system can be configured by installing the encoder battery to the servo amplifier. In this case, the battery life will be shorter because the power consumption is increased as the power is supplied to the two encoders of motor side and load side.

(1) Operation from controller
Positioning operation from the controller is basically performed like the semi closed loop control.

(2) Servo system controller setting
When using fully closed loop system, make the following setting.
[Pr. PA01], [Pr. PC17], [Pr. PE01], [Pr. PE03] to [Pr. PE05], [Pr. PE34] and [Pr. PE35] are written to the servo amplifier and then are enabled using any of the methods indicated by ○ in Parameter enabled conditions. [Pr. PE06] to [Pr. PE08] are enabled at setting regardless of the valid conditions.

Setting item		Parameter enabled conditions		Settings	
		Controller reset	Power supply Off→on	Motion controller	Simple motion module
				Q17nDSCPU	QD77MS_
Command resolution				Load-side encoder resolution unit	
Servo parameter	MR-J4-B fully closed loop servo amplifier setting			MR-J4-B(-RJ) fully closed loop control	
	Motor setting			Automatic setting	
	Home position setting condition selection ([Pr. PC17])	○	○	Set the items as required.	
	Fully closed loop selection ([Pr. PA01] and [Pr. PE01])	×	○		
	Fully closed loop selection 2 ([Pr. PE03])	○	○		
	Fully closed loop control error detection speed deviation error detection level ([Pr. PE06])	Enabled at setting regardless of the enabled conditions			
	Fully closed loop control error detection position deviation error detection level ([Pr. PE07])				
	Fully closed loop electronic gear numerator ([Pr. PE04] and [Pr. PE34])	×	○		
	Fully closed loop electronic gear denominator ([Pr. PE05] and [Pr. PE35])	×	○		
	Fully closed loop dual feedback filter ([Pr. PE08])	Enabled at setting regardless of the enabled conditions			
Positioning control parameter	Unit setting	mm/inch/degree/pulse			
	Number of pulses per revolution (AP) Travel distance per revolution (AL)	For the setting methods, refer to (2) (a), (b) in this section.			

(a) When using a linear encoder (unit setting: mm)

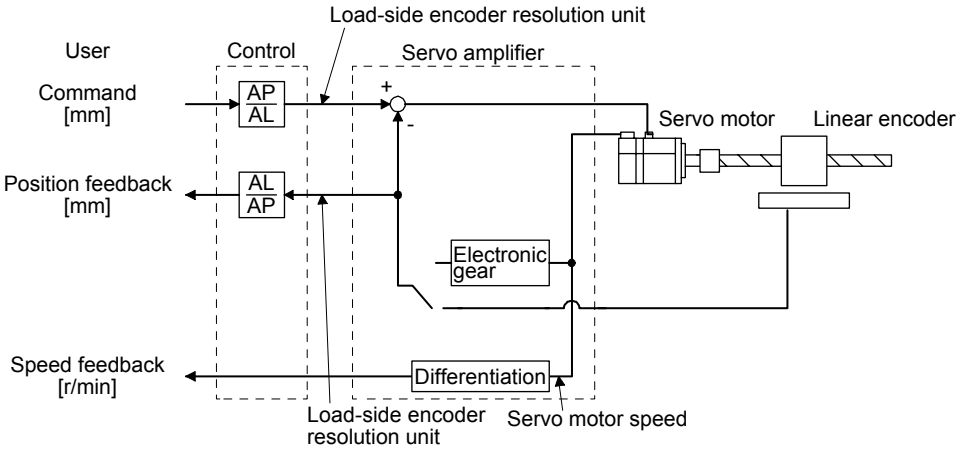

Calculate the number of pulses (AP) and travel distance (AL) of the linear encoder per ball screw revolution in the following conditions.

Ball screw lead: 20 mm
Linear encoder resolution: 0.05 μm

Number of linear encoder pulses (AP) per ball screw revolution
= Ball screw lead/linear encoder resolution= 20 mm/0.05 μm = 400000 pulses

$$\frac{\text{Number of pulses per revolution [pulse] (AP)}}{\text{Travel distance per revolution [μm] (AL)}} = \frac{\text{400000 pulses}}{\text{20 mm}} = \frac{400000}{20000}$$

(b) When using a rotary encoder (unit setting: degree)

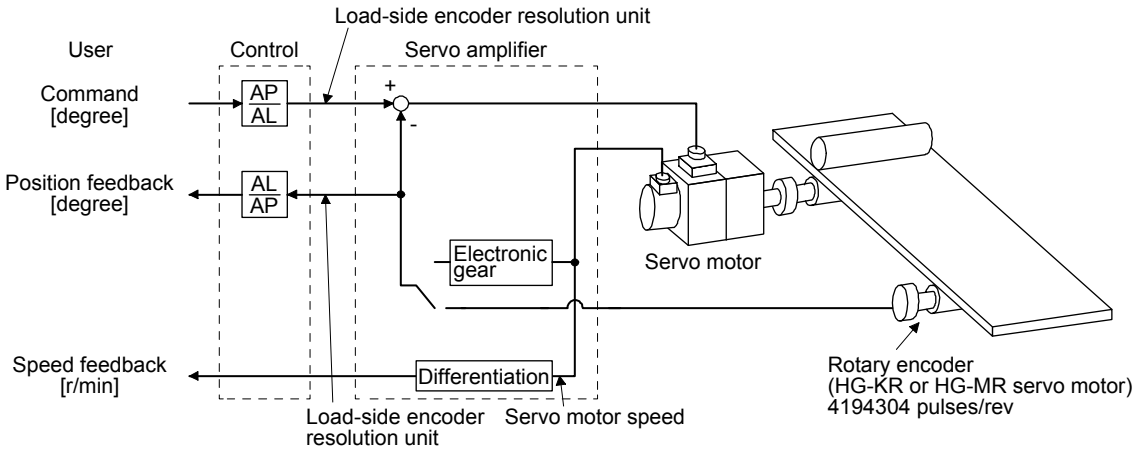

Calculate the number of pulses (AP) and travel distance (AL) of the rotary encoder per servo motor revolution in the following conditions.

Resolution of rotary encoder = Load-side resolution: 4194304 pulses/rev

$$\frac{\text{Number of pulses per revolution [pulse] (AP)}}{\text{Travel distance per revolution [degree] (AL)}} = \frac{\text{4194304 pulses}}{\text{360 degrees}} = \frac{524288}{45}$$

16.3.4 Fully closed loop control error detection functions

If fully closed loop control becomes unstable for some reason, the speed at servo motor side may increase abnormally. The fully closed loop control error detection function is a protective function designed to pre-detect it and stop operation.
The fully closed loop control error detection function has two different detection methods, speed deviation and position deviation, and errors are detected only when the corresponding functions are enabled by setting [Pr. PE03 Fully closed loop function selection 2].
The detection level setting can be changed using [Pr. PE06] and [Pr. PE07].

(1) Parameter
The fully closed loop control error detection function is selected.

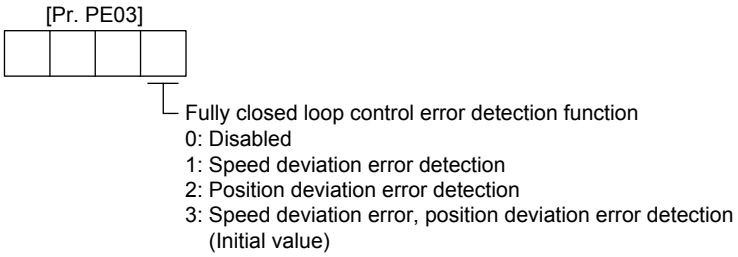

(2) Fully closed loop control error detection functions

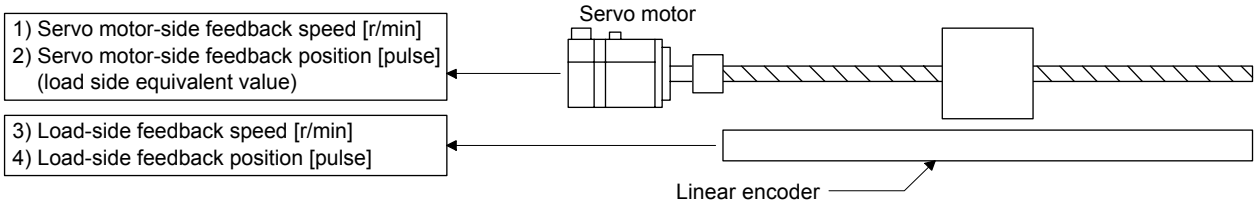

(a) Speed deviation error detection
Set [Pr. PE03] to "_ _ _ 1" to enable the speed deviation error detection.

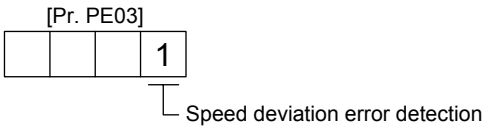

The function compares the servo motor-side feedback speed (1)) and load-side feedback speed (3)). If the deviation is not less than the set value (1 r/min to the permissible speed) of [Pr. PE06 Fully closed loop control speed deviation error detection level], the function generates [AL. 42.2 Servo control error by speed deviation] and stops. The initial value of [Pr. PE06] is 400 r/min. Change the set value as required.

(b) Position deviation error detection
Set [Pr. PE03] to "_ _ _ 2" to enable the position deviation error detection.

[Pr. PE03]

			2

Position deviation error detection

Comparing the servo motor-side feedback position (2)) and load-side feedback position (4)), if the deviation is not less than the set value (1 kpulses to 20000 kpulses) of [Pr. PE07 Fully closed loop control position deviation error detection level], the function generates [AL. 42 42.1 Servo control error by position deviation] and stops. The initial value of [Pr. PE07] is 100 kpulses. Change the set value as required.

(c) Detecting multiple deviation errors
When setting [Pr. PE03] as shown below, multiple deviation errors can be detected. For the error detection method, refer to (2) (a), (b) in this section.

[Pr. PE03]

Setting value	Speed deviation error detection	Position deviation error detection
1	○	
2		○
3	○	○

16.3.5 Auto tuning function

Refer to section 6.3 for the auto tuning function.

16.3.6 Machine analyzer function

Refer to Help of MR Configurator2 for the machine analyzer function of MR Configurator2.

16.3.7 Test operation mode

Test operation mode is enabled by MR Configurator2.
For details on the test operation mode, refer to section 4.5.

Function	Item	Usability	Remarks
Test operation mode	JOG operation	○	It drives in the load-side encoder resolution unit
	Positioning operation	○	The fully closed loop system is operated in the load-side encoder resolution unit. For details, refer to section 4.5.1 (1) (c).
	Program operation	○	
	Output signal (DO) forced output	○	Refer to section 4.5.1 (1) (b).
	Motor-less operation		

16.3.8 Absolute position detection system under fully closed loop system

An absolute type linear encoder is necessary to configure an absolute position detection system under fully closed loop control using a linear encoder. In this case, the encoder battery need not be installed to the servo amplifier. When an rotary encoder is used, an absolute position detection system can be configured by installing the encoder battery to the servo amplifier. In this case, the battery life will be shorter because the power consumption is increased as the power is supplied to the two encoders of motor side and load side. For the absolute position detection system with linear encoder, the restrictions mentioned in this section apply. Enable the absolute position detection system with [Pr. PA03 Absolute position detection system] and use this servo within the following restrictions.

(1) Using conditions

(a) Use an absolute type linear encoder with the load-side encoder.

(b) Select Always fully closed loop ([Pr. PA01] = _ _ 1 _ and [Pr. PE01] = _ _ _ 0).

(2) Absolute position detection range using encoder

Encoder type	Absolute position detection enabled range
Linear encoder (Serial Interface)	Movable distance range of scale (within 32-bit absolute position data)

(3) Alarm detection

The absolute position-related alarm ([AL. 25]) and warnings (AL. 92] and [AL. 9F]) are not detected.

16.3.9 About MR Configurator2

Using MR Configurator2 can confirm if the parameter setting is normal or if the servo motor and the load-side encoder operate properly.
This section explains the fully closed diagnosis screen.
Click "Monitor start" to constantly read the monitor display items from the servo amplifier.
Then, click "Monitor stop" to stop reading. Click "Parameter read" to read the parameter items from the servo amplifier, and then click "Parameter write" to write them.

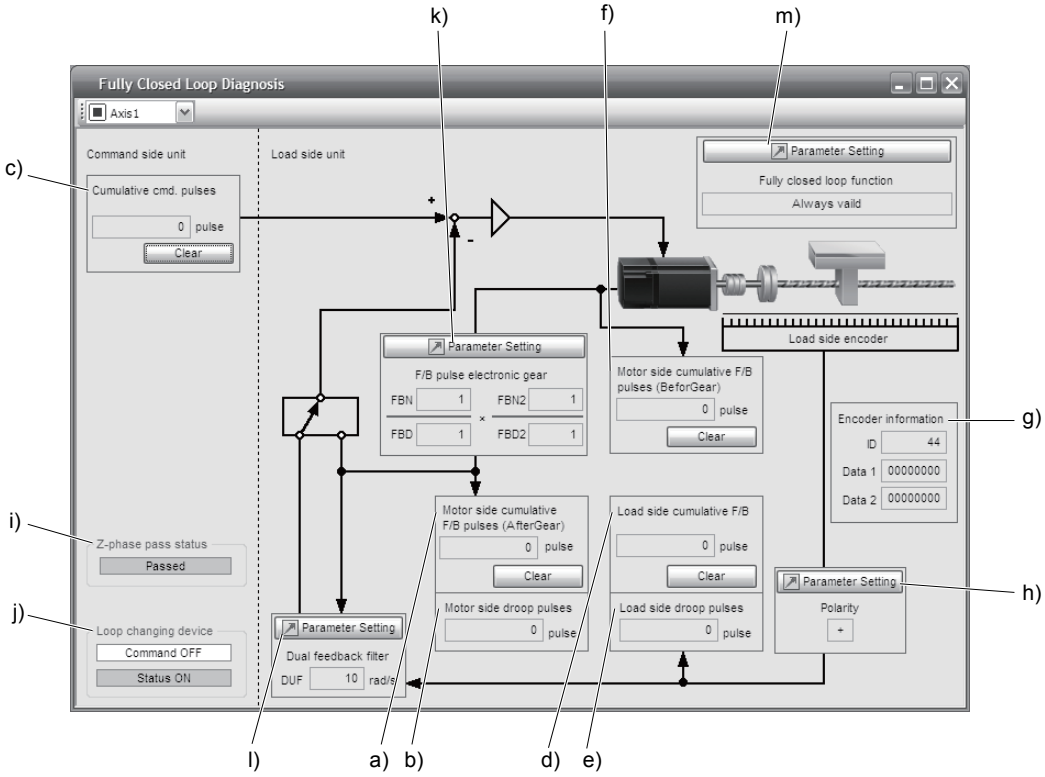

Symbol	Name	Explanation	Unit
a)	Motor side cumu. feedback pulses (after gear)	Feedback pulses from the servo motor encoder are counted and displayed. (load-side encoder unit) When the set value exceeds 999999999, it starts with 0. Click "Clear" to reset the value to 0. The "-" symbol is indicated for reverse.	pulse
b)	Motor side droop pulses	Droop pulses of the deviation counter between a servo motor-side position and a command are displayed. The "-" symbol is indicated for reverse.	pulse
c)	Cumu. Com. pulses	Position command input pulses are counted and displayed. Click "Clear" to reset the value to 0. The "-" symbol is indicated for reverse command.	pulse
d)	Load side cumu. feedback pulses	Feedback pulses from the load-side encoder are counted and displayed. When the set value exceeds 999999999, it starts with 0. Click "Clear" to reset the value to 0. The "-" symbol is indicated for reverse.	pulse
e)	Load side droop pulses	Droop pulses of the deviation counter between a load-side position and a command are displayed. The "-" symbol is indicated for reverse.	pulse

Symbol	Name	Explanation	Unit
f)	Motor side cumu. feedback pulses (before gear)	Feedback pulses from the servo motor encoder are counted and displayed. (Servo motor encoder unit) When the set value exceeds 999999999, it starts with 0. Click "Clear" to reset the value to 0. The "-" symbol is indicated for reverse.	pulse
g)	Encoder information	The load-side encoder information is displayed. The display contents differ depending on the load-side encoder type. ・ID: The ID No. of the load-side encoder is displayed. ・Data 1: For the incremental type linear encoder, the counter from powering on is displayed. For the absolute position type linear encoder, the absolute position data is displayed. ・Data 2: For the incremental type linear encoder, the distance (number of pulses) from the reference mark (Z-phase) is displayed. For the absolute position type linear encoder, "00000000" is displayed.	
h)	Polarity	For address increasing direction in the servo motor CCW, it is indicated as "+" and for address decreasing direction in the servo motor CCW, as "-".	
i)	Z phase pass status	If the fully closed loop system is "Disabled", the Z-phase pass status of the servo motor encoder is displayed. If the fully closed loop system is "Enabled" or "Semi closed loop control/fully closed loop control switching", the Z-phase pass status of the load-side encoder is displayed.	
j)	Fully closed loop changing device	Only if the fully closed loop system is "Semi closed loop control/fully closed loop control switching", the device is displayed. The state of the semi closed loop control/fully closed loop control switching signal and the inside state during selection are displayed.	
k)	Parameter (Feedback pulse electronic gear)	The feedback pulse electronic gears ([Pr. PE04], [Pr. PE05], [Pr. PE34], and [Pr. PE35]) are displayed/set for servo motor encoder pulses in this parameter. (Refer to section 16.3.1 (5).)	
l)	Parameter (Dual feedback filter)	The band of [Pr. PE08 Fully closed loop dual feedback filter] is displayed/set in this parameter.	
m)	Parameter (fully closed loop selection)	The parameter for the fully closed loop control is displayed or set. Click "Parameter setting" button to display the "Fully closed loop control - Basic" window. 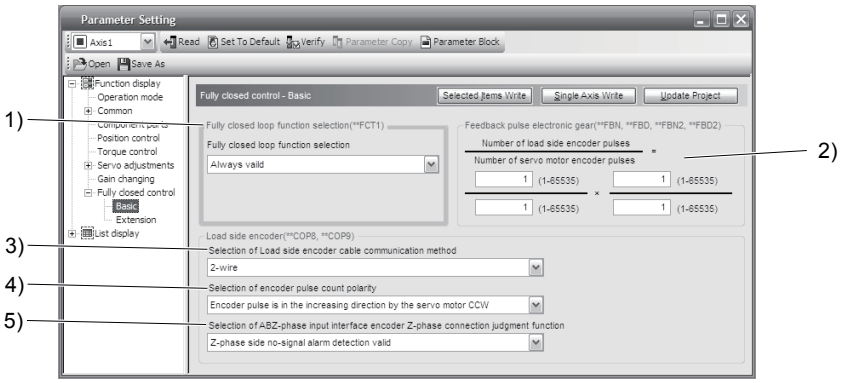 1) Fully closed loop selection ([Pr. PE01]) "Always valid" or "Switching with the control command of controller" is selected here. 2) Feedback pulse electronic gear ([Pr. PE04], [Pr. PE05], [Pr. PE34], [Pr. PE35]) Setting of feedback pulse electronic gear 3) Load-side encoder cable communication method selection ([Pr. PC26]) 4) Selection of encoder pulse count polarity ([Pr. PC27]) Polarity of the load-side encoder information is selected. 5) Selection of A/B/Z-phase input interface encoder Z-phase connection judgement function ([Pr. PC27]) Select the non-signal detection status for the pulse train signal from the A/B/Z-phase input interface encoder used as a linear encoder or load-side encoder.	

MEMO

17. APPLICATION OF FUNCTIONS

This chapter explains application of using servo amplifier functions.

17.1 J3 compatibility mode

POINT

- The J3 compatibility mode is compatible only with HG series servo motors.
- The fully closed loop control in the J3 compatibility mode is available for the servo amplifiers with software version A3 or later.
- Specifications of the J3 compatibility mode of the servo amplifier with software version A4 or earlier differ from those with software version A5 or later.
- The J3 compatibility mode is not compatible with the master-slave operation function.

17.1.1 Outline of J3 compatibility mode

MR-J4W_-_B servo amplifiers and MR-J4-_B_(-RJ) servo amplifiers have two operation modes. "J4 mode" is for using all functions with full performance and "J3 compatibility mode" is compatible with MR-J3-B series for using the amplifiers as the conventional series.
When you connect an amplifier with SSCNET III/H communication for the first controller communication by factory setting, the operation mode will be fixed to "J4 mode". For SSCNET communication, it will be fixed to "J3 compatibility mode". When you set the mode back to the factory setting, use the application "MR-J4(W)-B mode selection".
The application "MR-J4(W)-B mode selection" is packed with MR Configurator2 of software version 1.12N or later.
For the operating conditions of the application "MR-J4(W)-B mode selection", use MR Configurator2. (Refer to section 11.4.)

17.1.2 Operation modes supported by J3 compatibility mode

The J3 compatibility mode supports the following operation modes.

Operation mode in J3 compatibility mode	Model of MR-J3-_B	Model of MR-J3-_BS	Model of MR-J3W-_B
MR-J3-B standard control mode (rotary servo motor)	MR-J3-_B	MR-J3-_BS	MR-J3W-_B
MR-J3-B fully closed loop control mode	MR-J3-_B-RJ006	MR-J3-_BS	
MR-J3-B linear control mode	MR-J3-_B-RJ004		MR-J3W-_B
MR-J3-B DD motor control mode	MR-J3-_B-RJ080W		MR-J3W-_B

Each operation mode has the same ordering as conventional MR-J3-B series servo amplifiers and is compatible with their settings.
In addition, the control response characteristic in the J3 compatibility mode will be the same as that of MR-J3 series.

17.1.3 J3 compatibility mode supported function list

The following shows functions which compatible with J4 mode and J3 compatibility mode. The letters such as "A0" described after ◎ and ○ mean servo amplifier software versions which compatible with each function. Each function is used with servo amplifiers with these software versions or later.

Function	Name	Corresponding (◎: J4 new, ○: Equivalent to J3, ×: Not available)		
		MR-J4 series		MR-J3/MR-J3W series (Note 8)
		J4 mode	J3 compatibility mode	
Basic specification	Speed frequency response	2.5 kHz	2.1 kHz	2.1 kHz
	Encoder resolution	22 bit (Note 1)	18 bit (Note 1)	18 bit
SSCNET III/H communication or SSCNET III communication	Communication baud rate	150 Mbps	50 Mbps	50 Mbps
	Maximum distance between stations	100 m	50 m	50 m
Basic function	Absolute position detection system	○ A0	○ A0	○
	Fully closed loop control (Note 9)	○ A3 (Two-wire type only) (Note 13)	○ A3 (Two-wire type only) (Note 13)	MR-J3-_B-RJ006 MR-J3-_S
	Linear servo motor driving	○ A0 (Two-wire type/ four-wire type only) (Note 13)	○ A0 (Two-wire type/ four-wire type only) (Note 13)	MR-J3-_B-RJ004 MR-J3W-_B
	Direct drive motor driving	○ A0	○ A0	MR-J3-_B-RJ080W MR-J3W-_B
	Motor-less operation	○ A0 (Note 2)	○ A0 (Note 2)	○
	Rotation direction selection/travel direction selection	○ A0	○ A0	○
Encoder output pulses	A/B-phase pulse output	○ A0 (Note 3)	○ A0 (Note 3)	○
	Z-phase pulse output	○ A0 (Note 4)	○ A0 (Note 4)	○ (Note 4)
Input/output	Analog monitor output	○ A0 (Note 5)	○ A0 (Note 5)	○
	Motor thermistor	○ A0	○ A0	MR-J3-_B-RJ004 MR-J3-_B-RJ080W MR-J3W-_B
Control mode	Position control mode	○ A0	○ A0	○
	Speed control mode	○ A0	○ A0	○
	Torque control mode	○ A0	○ A0	○
	Continuous operation to torque control mode	○ A0	○ A0	○

Function	Name	Corresponding (◎: J4 new, ○: Equivalent to J3, ×: Not available)		
		MR-J4 series		MR-J3/MR-J3W series (Note 8)
		J4 mode	J3 compatibility mode	
Auto tuning	Auto tuning mode 1	○ A0	○ A0	○
	Auto tuning mode 2	○ A0	○ A0	○
	2 gain adjustment mode 1 (interpolation mode)	○ A0	○ A0	○
	2 gain adjustment mode 2	◎ A0	×	×
	Manual mode	○ A0	○ A0	○
Filter function	Machine resonance suppression filter 1	○ A0	○ A0	○
	Machine resonance suppression filter 2	○ A0	○ A0	○
	Machine resonance suppression filter 3	◎ A0	×	×
	Machine resonance suppression filter 4	◎ A0	×	×
	Machine resonance suppression filter 5	◎ A0	×	×
	Shaft resonance suppression filter	○ A0	×	×
	Low-pass filter	○ A0	○ A0	○
	Robust disturbance compensation (Note 10)	×	○ A0	○
	Robust filter	◎ A0	×	×
Vibration suppression control	Standard mode/3 inertia mode	◎ A0	×	×
	Vibration suppression control 1	○ A0	○ A0	○
	Vibration suppression control 2	◎ A0	×	×
	Command notch filter	○ A0	○ A0	○
Applied control	Gain switching	○ A0	○ A0	○
	Slight vibration suppression control	○ A0	○ A0	○
	Overshoot amount compensation	○ A0	○ A0	○
	PI-PID switching control	○ A0	○ A0	○
	Feed forward	○ A0	○ A0	○
	Torque limit	○ A0	○ A0	○
	Master-slave operation function	○ A8 (Note 5)	×	○
	Scale measurement function	○ A8 (Note 3)	×	×
Adjustment function	One-touch tuning	◎ A0	×	×
	Adaptive tuning	○ A0	○ A0	○
	Vibration suppression control 1 tuning	○ A0	○ A0	○
	Vibration suppression control 2 tuning	◎ A0	×	×
Fully closed loop control	Fully closed loop electronic gear	○ A3	○ A3	MR-J3-_BS MR-J3-_B-RJ006
	Dual feedback control	○ A3	○ A3	
	Semi closed/fully closed switching loop control	○ A3	○ A3	
	Fully closed loop control error detection function	○ A3	○ A3	
Linear control	Linear servo control error detection function	○ A0	○ A0	MR-J3-_B-RJ004 MR-J3W-_B
	Servo motor series/types setting function	○ A0	○ A0	
Magnetic pole detection	Direct current exciting method magnetic pole detection	○ A0	○ A0	MR-J3-_B-RJ004 MR-J3-_B-RJ080W MR-J3W-_B
	Current detection method magnetic pole detection	× (Note 6)	○ A0	MR-J3-_B-RJ004 MR-J3W-_B
	Minute position detection method magnetic pole detection	○ A0	○ A0	MR-J3-_B-RJ004 MR-J3-_B-RJ080W MR-J3W-_B
	Initial magnetic pole detection error detection function	○ A0	○ A0	

Function	Name	Corresponding (◎: J4 new, ○: Equivalent to J3, ×: Not available)		
		MR-J4 series		MR-J3/MR-J3W series (Note 8)
		J4 mode	J3 compatibility mode	
Encoder	Semi closed loop control two-wire type/four-wire type selection	○ A0	○ A0	○
	Serial interface compatible linear encoder	○ A0	○ A0	MR-J3-_S MR-J3-_B-RJ006 MR-J3-_B-RJ004 MR-J3W-_B
	Pulse train interface (A/B/Z-phase differential output type) compatible linear encoder	○ A5 (Note 14)	○ A5 (Note 14)	MR-J3-_S MR-J3-_B-RJ006 MR-J3-_B-RJ004
Functional safety	STO function	○ A0	○ A0	MR-J3-_S
	Forced stop deceleration function at alarm occurrence	○ A0	○ A0 (Note 12)	MR-J3-_S
	Vertical axis freefall prevention function	○ A0	○ A0	MR-J3-_S
Tough drive function	SEMI-F47 function	◎ A0	×	×
	Vibration tough drive	◎ A0	×	×
	Instantaneous power failure tough drive	◎ A0	×	×
Diagnosis function	3-digit alarm display	◎ A0	◎ A0	MR-J3W-_B
	16 alarm histories supported	◎ A0	× (Note 7)	× (Note 7)
	Drive recorder function	◎ A0	×	×
	Machine diagnosis function	◎ A0	×	×
Controller	SSCNET III	×	○ A0	○
	SSCNET III/H	◎ A0	×	×
	Home position return function	○ A0	○ A0	○
Others	J4 mode/J3 compatibility mode automatic identification (Note 11)	○ A0	○ A0	×
	Power monitoring function	◎ A0	×	×

Note 1. The value is at the HG series servo motor driving.
2. The motor-less operation for the linear servo mo tor and direct drive motor driving will be available in the future.
3. It is not available with the MR-J4W3-_B servo amplifiers.
4. It is not available with the MR-J3W-_B, MR-J4W2-_B, and MR-J4W3-_B servo amplifiers.
5. It is not available with the MR-J4W2-_B and MR-J4W3-_B servo amplifiers.
6. The minute position detection method is available instead.
7. Alarm history will be saved up to five times.
8. The functions of the product with modified parts (GA) in the MR-J3-_B servo amplifiers are all covered by the J3 compatibility mode of the MR-J4-_B_ servo amplifiers.
9. MR-J4W3-_B servo amplifiers do not support the fully closed loop control system.
10. For MR-J4 series, the robust filter and vibration tough drive are available instead.
11. The operation mode will be adjusted automatically at the first controller communication. You can change the operation mode with the application "MR-J4(W)-B mode selection".
12. When MR-J4 is used as a replacement of MR-J3-_S, "Servo forced stop selection" in [Pr. PA04] will be "Disabled (_ 1 _ _)" in the initial setting. Change the setting as required.
13. This is for MR-J4-_B_ servo amplifier. MR-J4-_B_-RJ servo amplifier is compatible with two-wire type, four-wire type, and A/B/Zphase differential output type.
14. It is available with only MR-J4-_B_-RJ servo amplifiers. It is not available with MR-J4-_B_ servo amplifiers.

17.1.4 How to switch J4 mode/J3 compatibility mode

There are two ways to switch the J4 mode/J3 compatibility mode with the MR-J4W_-_B servo amplifier and MR-J4-_B_(-RJ) servo amplifier.

(1) Mode selection by the automatic identification of the servo amplifier
J4 mode/J3 compatibility mode is identified automatically depending on the connected controller.
When the controller make a connection request with SSCNET III/H communication, the mode will be "J4 mode". For SSCNET communication, it will be "J3 compatibility mode".
For the J3 compatibility mode, standard control, linear servo motor control, or direct drive motor control will be identified automatically with a motor (encoder) connected to the servo amplifier. For the J4 mode, the operation mode will be the setting of [Pr. PA01].

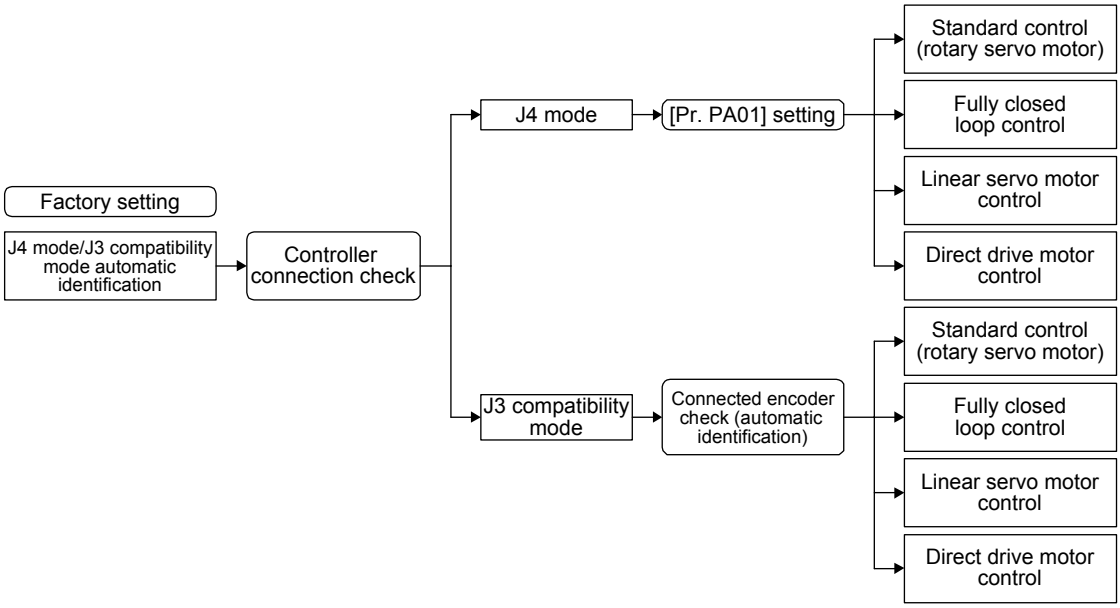

(2) Mode selection using the application software "MR-J4(W)-B mode selection"
You can set the factory setting, J4 mode/J3 compatibility mode, and operation mode with the dedicated application.

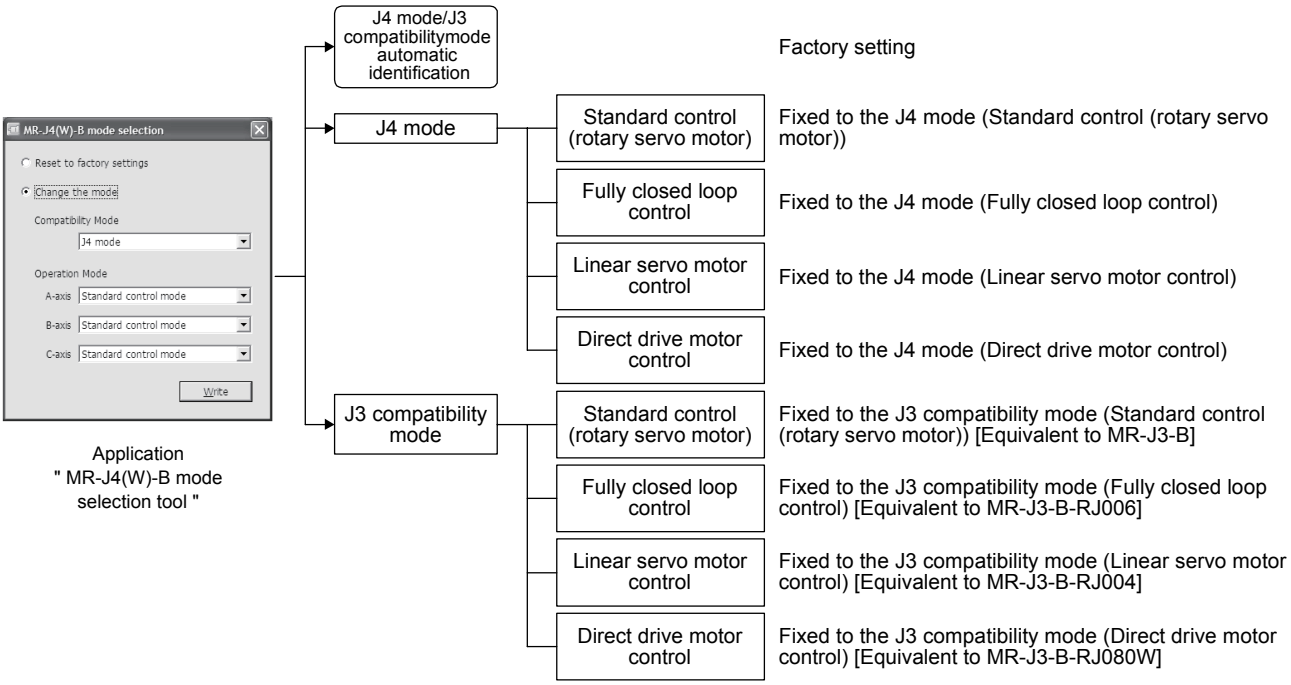

17.1.5 How to use the J3 compatibility mode

(1) Setting of the controller
To use in the J3 compatibility mode, select MR-J3 series in the system setting window.

Operation mode in J3 compatibility mode	System setting
MR-J3-B standard control mode (rotary servo motor)	Select MR-J3-_B.
MR-J3-B fully closed loop control mode	Select MR-J3-_B fully closed.
MR-J3-B linear control mode	Select MR-J3-_B linear.
MR-J3-B DD motor control mode	Select MR-J3-_B DDM.

(2) Setting of MR Configurator
To use in the J3 compatibility mode, make the system setting as follows.

Operation mode in J3 compatibility mode	System setting
MR-J3-B standard control mode (rotary servo motor)	Select MR-J3-_B.
MR-J3-B fully closed loop control mode	Select MR-J3-_B fully closed.
MR-J3-B linear control mode	Select MR-J3-_B linear.
MR-J3-B DD motor control mode	Select MR-J3-_B DDM.

Cautions for using MR Configurator
- The gain search cannot be used. You can use the advanced gain search.
- The C-axis of MR-J4W3-_B cannot be set with MR Configurator. Use MR Configurator2 for it.

(3) Setting of MR Configurator2
To use in the J3 compatibility mode, make the system setting as follows.

Operation mode in J3 compatibility mode	System setting
MR-J3-B standard control mode (rotary servo motor)	Select MR-J3-_B.
MR-J3-B fully closed loop control mode	Select MR-J3-_B fully closed.
MR-J3-B linear control mode	Select MR-J3-_B linear.
MR-J3-B DD motor control mode	Select MR-J3-_B DDM.

Cautions for using MR Configurator2
- Use MR Configurator2 with software version 1.12N or later. Older version than 1.12N cannot be used.
- Information about existing models (MR-J3) cannot be updated with the parameter setting range update function. Register a new model to use.
- The alarm will be displayed by 3 digits.
- The robust disturbance compensation cannot be used.

17.1.6 Cautions for switching J4 mode/J3 compatibility mode

The J3 compatibility mode of the operation mode is automatically identified by factory setting depending on a connected encoder. If a proper encoder is not connected at the first connection, the system will not start normally due to a mismatch with a set mode with the controller. (For the J4 mode, you can set the operation mode with [Pr. PA01].) For example, if the controller is connected without connecting a linear encoder at linear servo motor driving, the servo amplifier will be the standard control mode (rotary servo motor). The system will not start because the controller is connected with the linear servo motor driving amplifier.
When the operation mode mismatches, the servo amplifier will display [AL. 3E.1 Operation mode error]. Set the mode back to the factory setting or set correctly (J4 mode/J3 compatibility mode and operation mode) using the application "MR-J4(W)-B mode selection".

17.1.7 Cautions for the J3 compatibility mode

The J3 compatibility mode are partly changed and has restrictions compared with MR-J3 series.

(1) The alarm display was changed from 2 digits (_ _) to 3 digits (_ _. _). The alarm detail number (._) is displayed in addition to the alarm No (_ _). The alarm No. (_ _) is not changed.

(2) When the power of the servo amplifier is cut or fiber-optic cable is disconnected, the same type communication can be cut regardless of connection order. When you power on/off the servo amplifier during operation, use the connect/disconnect function of the controller. Refer to the following manuals for detail.
- Motion controller Q series Programming Manual (COMMON) (Q173D(S)CPU/Q172D(S)CPU) (IB-0300134) "4.11.1 Connect/disconnect function of SSCNET communication"
- MELSEC-Q QD77MS Simple Motion Module User's Manual (IB-0300185) "14.12 Connect/disconnect function of SSCNET communication"
- MELSEC-L LD77MH Simple Motion Module User's Manual (IB-0300172) "14.13 Connect/disconnect function of SSCNET communication"

(3) The J3 compatibility mode has a functional compatibility. However, the operation timing may differ. Check the operation timing on customer side to use.

(4) The J3 compatibility mode is not compatible with high-response control set by [Pr. PA01 Operation mode].

(5) For MR-J3 series, a linear encoder was connected to the CN2L connector. For J4 (J3 compatibility mode), it is connected to the CN2 connector. Therefore, set the two-wire/four-wire type of the linear encoder in the J3 compatibility mode with [Pr. PC26], not with [Pr. PC04].

(6) When you use a linear servo motor, select linear servo motor with [Pr. PA17] and [Pr. PA18].

17.1.8 Change of specifications of "J3 compatibility mode" switching process

(1) Detailed explanation of "J3 compatibility mode" switching

(a) Operation when using a servo amplifier before change of specifications
For the controllers in which "Not required" is described to controller reset in table 17.1, the mode will be switched to "J3 compatibility mode" for all axes at the first connection. However, it takes about 10 s per axis for completing the connection.
For the controllers in which "Reset required" is described in table 17.1, the operation at the first connection is shown in table 17.2. The LED displays will be "Ab." for all axes at the first connection to the controller as shown in table 17.2. After that, resetting controller will change the 1-axis to "b01". The 2-axis and later will not change from "Ab.". After that, one axis will be connected per two times of controller reset.

Table 17.1 Controller reset required/not required list (before change of specifications)

Controller	Model	Controller reset required/not required	
		Single-axis connection	Multi-axis connection
Motion controller	Q17_DSCPU	Not required	Not required
	Q17_DCPU	Not required	Not required
	Q17_HCPU	Not required	Not required
	Q170MCPU	Not required	Not required
Simple motion module Positioning module	QD77MS_	Not required	Not required
	QD75MH_	Not required	Not required
	QD74MH_	Reset required	Reset required
	LD77MH_	Not required	Not required
	FX3U-20SSC-H	Not required	Reset required

Table 17.2 Controller connection operation before change of specifications

	Before change of specifications (software version A4 or earlier)
First connection of controller	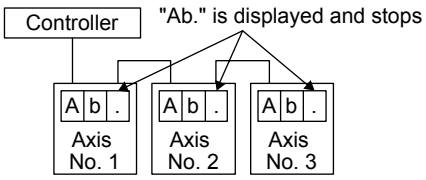
After controller reset	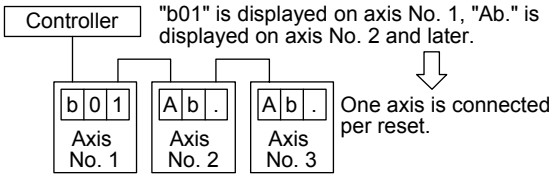

(b) Operation when using a servo amplifier after change of specifications

For the controllers in which "Not required" is described to controller reset in table 17.3, the mode will be switched to "J3 compatibility mode" for all axes at the first connection. It takes about 10 s for completing the connection not depending on the number of axes.

For the controllers in which "Reset required" is described in table 17.3, the operation at the first connection is shown in table 17.4. The servo amplifier's mode will be "J3 compatibility mode" and the LED displays will be "rST" for all axes at the first connection to the controller as shown in table 17.4. At the status, resetting controller once will change the display to "b##" (## means axis No.) for all axes and all axes will be ready to connect.

(One controller reset enables to all-axis connection.)

Table 17.3 Controller reset required/not required list (after change of specifications)

Controller	Model	Controller reset required/not required	
		Single-axis connection	Multi-axis connection
Motion controller	Q17_DSCPU	Not required	Not required
	Q17_DCPU	Not required	Not required
	Q17_HCPU	Not required	Not required
	Q170MCPU	Not required	Not required
Simple motion module Positioning module	QD77MS_	Not required	Not required
	QD75MH_	Not required	Not required
	QD74MH_	Reset required	Reset required
	LD77MH_	Not required	Not required
	FX3U-20SSC-H	Reset required	Reset required

Table 17.4 Controller connection operation after change of specifications

	After change of specifications (software version A4 or above)
First connection of controller	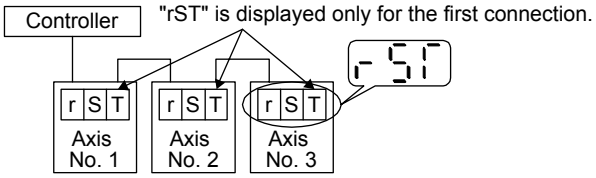
After controller reset	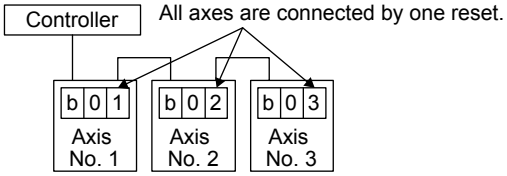

(c) Using servo amplifiers before and after change of specifications simultaneously

When using servo amplifiers before change of specifications and after change of specifications simultaneously, controller reset is necessary for number of connecting axes of servo amplifiers.

(2) Changing the mode to "J3 compatibility mode" by using the application "MR-J4(W)-B mode selection".
You can switch the servo amplifier's mode to "J3 compatibility mode" beforehand with the built-in application software "MR-J4(W)-B mode selection" of MR Configurator2. Use it for a solution when it is difficult to reset many times with your "Reset required" controller such as "QD74MH_".
The application "MR-J4(W)-B mode selection" has no expiration date.

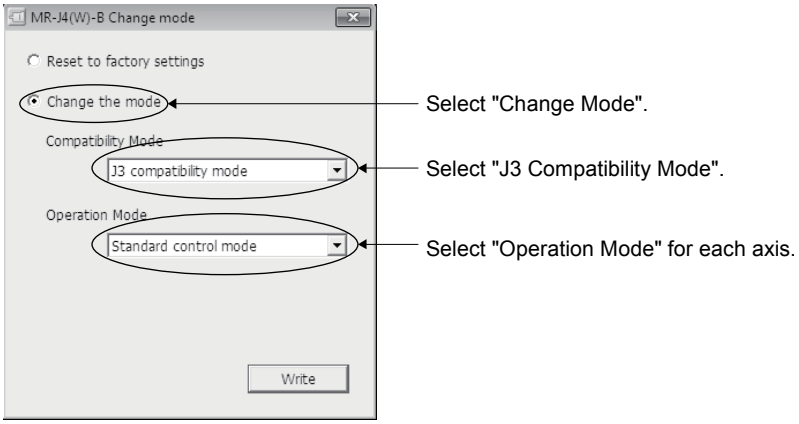

17.2 Master-slave operation function

⚠WARNING	●Configure the circuit so that all the master and slave axes for the same machine are stopped by the controller forced stop at the moment of a stop of a master or slave axis due to such as a servo alarm. When they are not stopped simultaneously by the controller forced stop, the servo motor may operate unexpectedly and the machine can be damaged. ●All the master and slave axes for the same machine should turn on/off EM1 (Forced stop 1) simultaneously. When EM1 (Forced stop 1) is not turned on/off simultaneously, the servo motor may operate unexpectedly and the machine can be damaged.

POINT

●The master-slave operation function works only when the deceleration to a stop function is disabled. When the deceleration to a stop function is enabled, [AL. 37] will occur.

●The master-slave operation function cannot be used with the continuous operation to torque control.

●For the controllers which compatible with the master-slave operation function, contact your local sales office.

●When the function is used in vertical axis system, set the same value to the parameters regarding the dynamic brake and electromagnetic brake to prevent a drop of axes.

●The servo-on command of the master axis and slave axis should be turned on/off simultaneously. If the servo-on command is turned on only for a slave axis, torque will not be generated. Therefore, an extreme load will be applied to the electromagnetic brake of the master axis for using in vertical axis system.

●The master-slave operation function is available for servo amplifier with software version A8 or later. All servo amplifiers used in the same system connected to a controller should be software version A8 or later.

(1) Summary

The master-slave operation function transmits a master axis torque to slave axes using driver communication and the torque as a command drives slave axes by torque control.
Transmission of torque data from the master axis to slave axes is via SSCNET III/H. Additional wiring is not required.

(2) System configuration

POINT

●The control modes compatible with the master-slave operation function are as follows.

Master-slave operation function compatibility table

Control mode	Deceleration to a stop function	Master axis (Note)	Slave axis (Note)
Standard control mode	Enabled		
	Disabled	○	○
Fully closed loop control mode	Enabled		
	Disabled	○	
Linear servo motor control mode	Enabled		
	Disabled		
DD motor control mode	Enabled		
	Disabled		

Note. When a setting for the master-slave operation is set to an axis which is not compatible with the master-slave operation function, [AL. 37] will occur.

●The master axis and slave axis are recommended to use for a linked condition on a mechanical constitution. When they are not linked, they can reach a speed limit level. Doing so may cause [AL. 31 Overspeed].

●The slave axes use the control command from the master axis. Therefore, the controller mainly controls parameter settings, servo-on command, acquisition of monitor information from a servo amplifier, etc. The commands regarding absolute positioning such as setting absolute position detection and requiring home position setting from the controller to slave axes must not be made.

●Configure the circuit so that all the master and slave axes are stopped at the moment of a stop of a master or slave axis due to such as a servo alarm.

●When the STO signal of a servo amplifier is used, the master axis and slave axis should be turned off simultaneously.

Eight master axes can be set at most per one system of SSCNET III/H. The maximum number of slave axes to each master axis is not limited. However, the total number of the master and slave axes should be the maximum number of the servo amplifiers at most. In addition, when an SSCNET III/H communication brake occurs due to malfunction of a servo amplifier, the malfunctioning axis and later axis cannot be communicated. Therefore, the first amplifier from the controller via SSCNET III/H cable should be master axis.

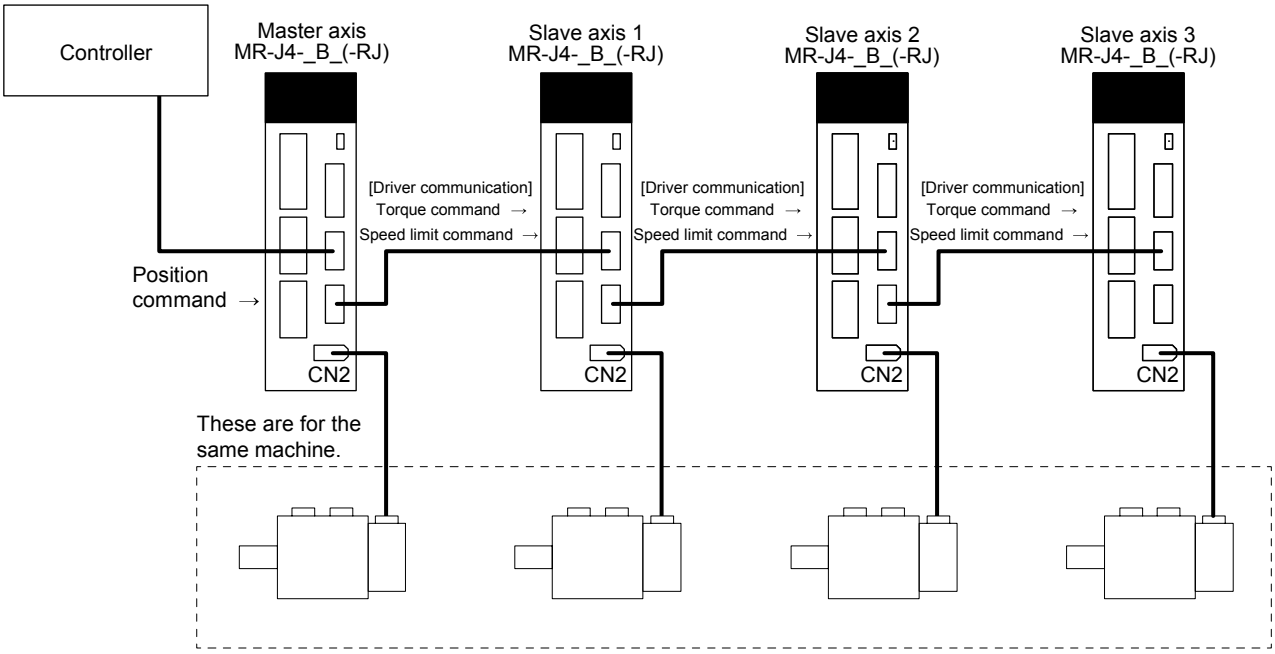

(3) Parameter setting for the master-slave operation function

To use the master-slave operation function, the following parameter settings are necessary. For details of the parameters, refer to section 5.2.1 and 5.2.4.

No.	Name	Initial value	Setting value		Setting
			Master axis	Slave axis	
PA04	Forced stop deceleration function selection	2000	0 _ _ _	0 _ _ _	Used to disable the deceleration to a stop function.
PA14	Rotation direction selection/travel direction selection	0	Refer to section 5.2.1.		Used to set a torque generation direction.
PD15 (Note)	Driver communication setting	0000	0001	0010	Master and slave setting
PD16 (Note)	Driver communication setting - Master - Transmit data selection 1	0000	0038	0000	Communication data from master to slave ・Torque command ・Speed limit value
PD17 (Note)	Driver communication setting - Master - Transmit data selection 2	0000	003A	0000	
PD20 (Note)	Master axis No. selection 1 for slave	0	0	Master axis No.	Master axis No. of transmitting data
PD30	Master-slave operation - Torque command coefficient on slave	0	0	Refer to section 5.2.4.	Ratio of torque command of slave axis, ratio of speed limit value, and setting of speed limit minimum value
PD31	Master-slave operation - Speed limit coefficient on slave	0	0		
PD32	Master-slave operation - Speed limit adjusted value on slave	0	0		

Note. Always set this with servo parameters of the controller. Incorrect setting will prevent a normal SSCNET III/H communication.

(4) Rotation direction setting

Rotation directions can be different among a controller command, master axis, and slave axes. To align the directions, set [Pr. PA14] referring (4) of this section. Not doing so can cause such as an overload due to a reverse direction torque against machine system rotation direction.

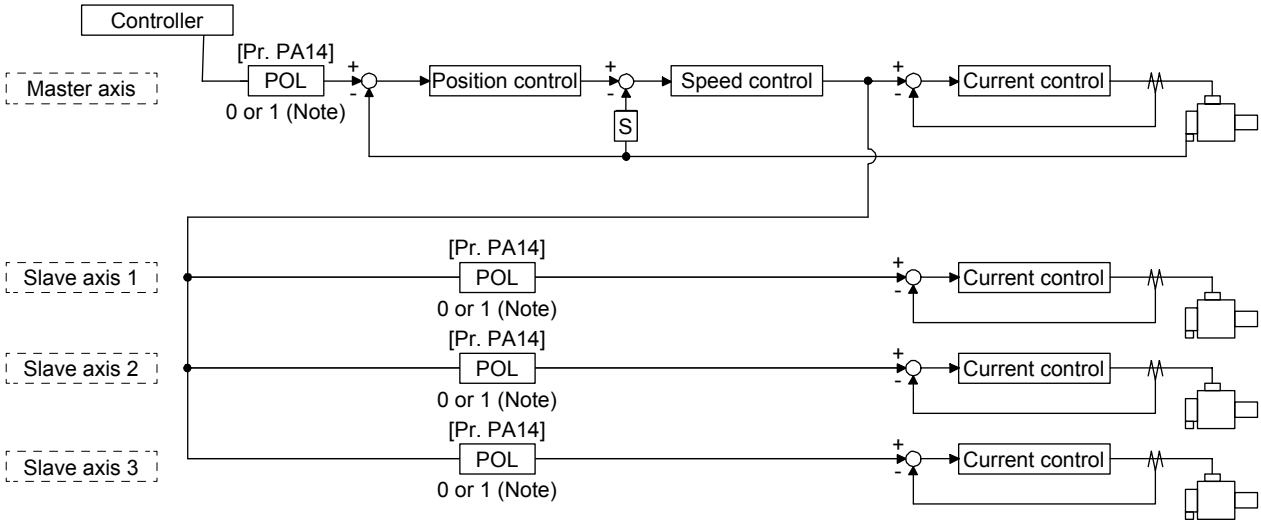

Note. Setting "1" will reverse the polarity.

Fig. 17.1 Rotation direction setting of master and slave axes with torque command method for an example of one master axis and three slave axes

Table 17.1 Rotation direction setting parameter

No.	Symbol	Name and function
PA14	*POL	Rotation direction selection 1. For master axis Select a servo motor rotation direction of master axis to SSCNET controller command. 0: Servo motor CCW rotation in positioning address increase direction 1: Servo motor CW rotation in positioning address increase direction 2. For slave axis Select servo motor rotation direction to a command from master axis. 0: Torque command polarity from master axis 1: Reverse of torque command polarity from master axis

17.3 Scale measurement function

The scale measurement function transmits position information of a scale measurement encoder to the controller by connecting the scale measurement encoder in semi closed loop control.

POINT

- The scale measurement function is available for the servo amplifiers of software version A8 or later.
- When a linear encoder is used as a scale measurement encoder for this servo amplifier, "Linear Encoder Instruction Manual" is necessary.
- When the scale measurement function is used for MR-J4-_B_ servo amplifiers, the following restrictions apply. However, these restrictions will not be applied for MR-J4-_B_-RJ servo amplifiers.
  - A/B/Z-phase differential output type encoder cannot be used.
  - The scale measurement encoder and servo motor encoder are compatible with only the two-wire type. The four-wire type scale measurement encoder and servo motor encoder cannot be used.
  - When you use the HG-KR and HG-MR series for driving and scale measurement encoder, the optional four-wire type encoder cables (MR-EKCBL30M-L, MR-EKCBL30M-H, MR-EKCBL40M-H, and MR-EKCBL50M-H) cannot be used. When an encoder cable of 30 m to 50 m is needed, fabricate a two-wire type encoder cable according to appendix 9.
- The scale measurement function compatible servo amplifier can be used with any of the following controllers.
  - Motion controller Q17nDSCPU
  - Simple motion module QD77MS_

  For settings of controllers compatible with the scale measurement function, refer to user's manuals for each controller.

17.3.1 Functions and configuration

(1) Function block diagram

The following shows a block diagram of the scale measurement function. The control will be performed per servo motor encoder unit for the scale measurement function.

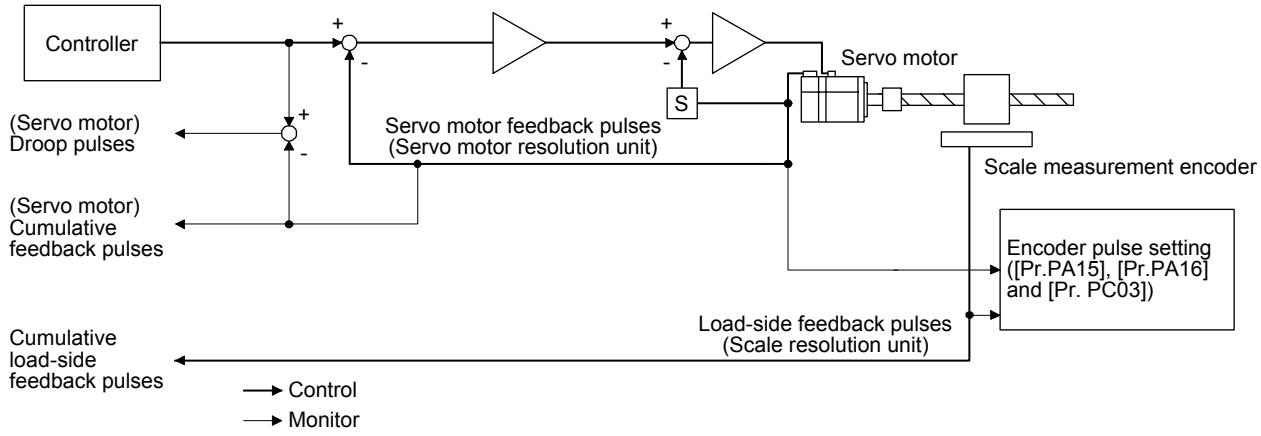

(2) System configuration

(a) For a linear encoder

1) MR-J4-_B_ servo amplifier

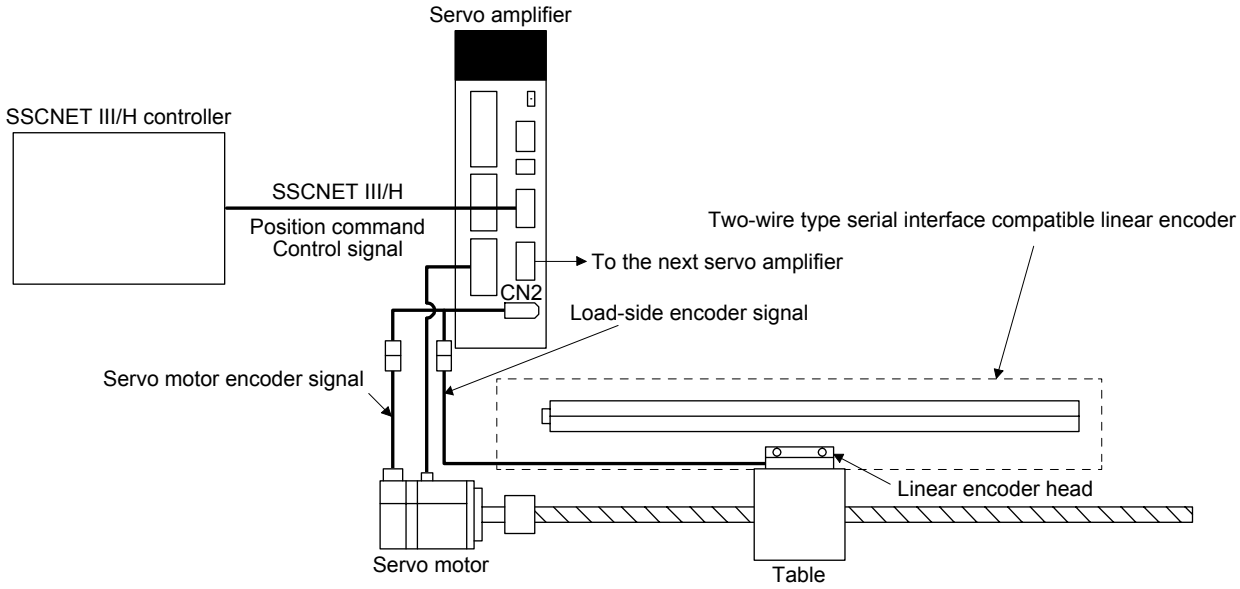

2) MR-J4-_B_-RJ servo amplifier

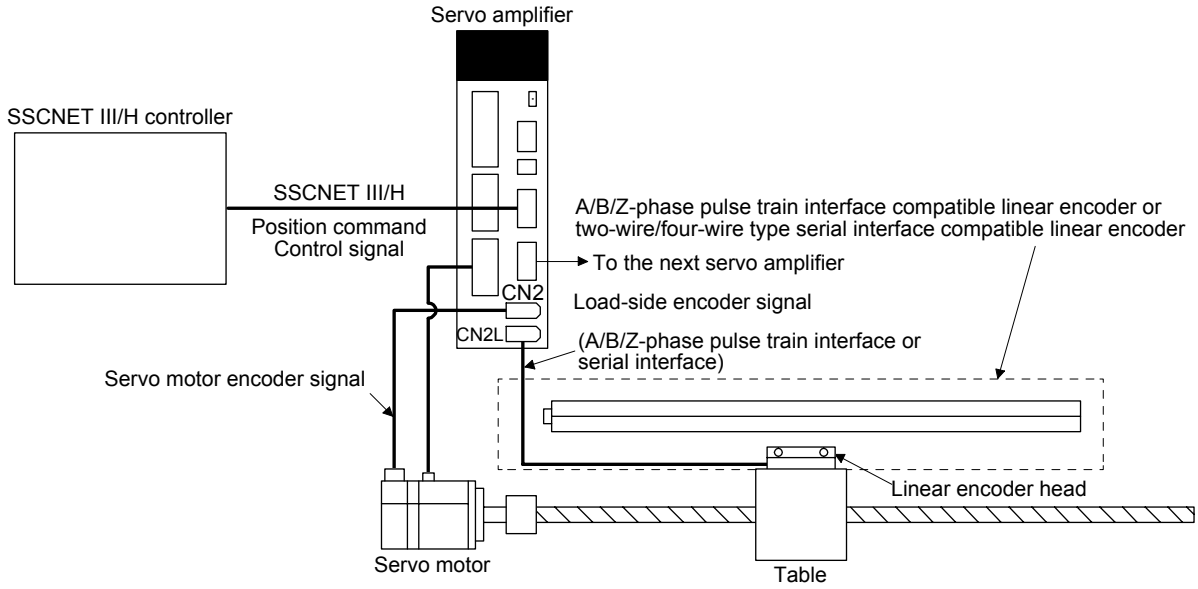

(b) For a rotary encoder

1) MR-J4-_B_ servo amplifier

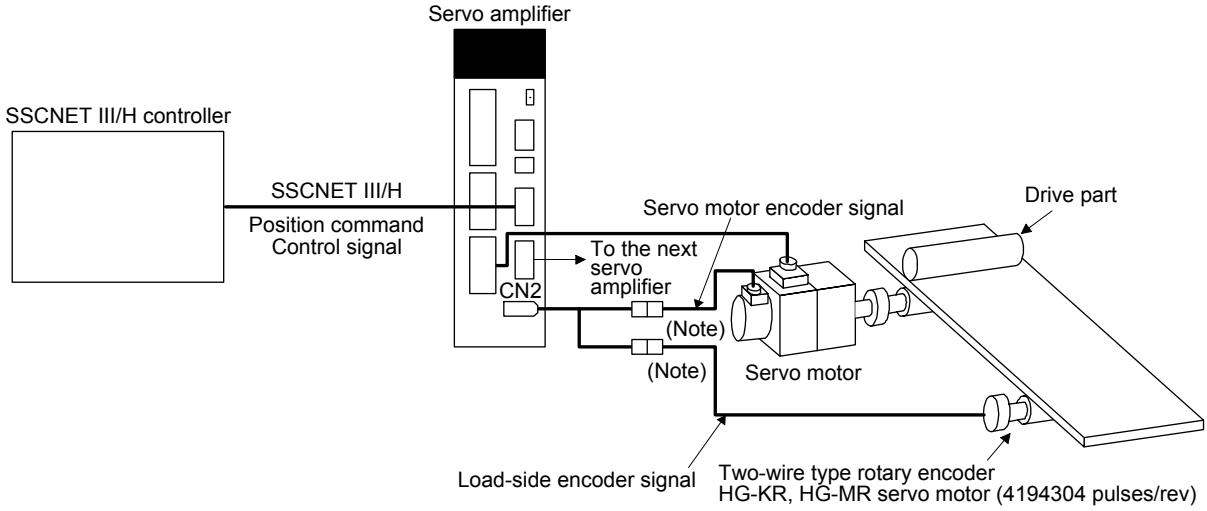

Note. Use a two-wire type encoder cable. A four-wire type linear encoder cable cannot be used.

2) MR-J4-_B_-RJ servo amplifier

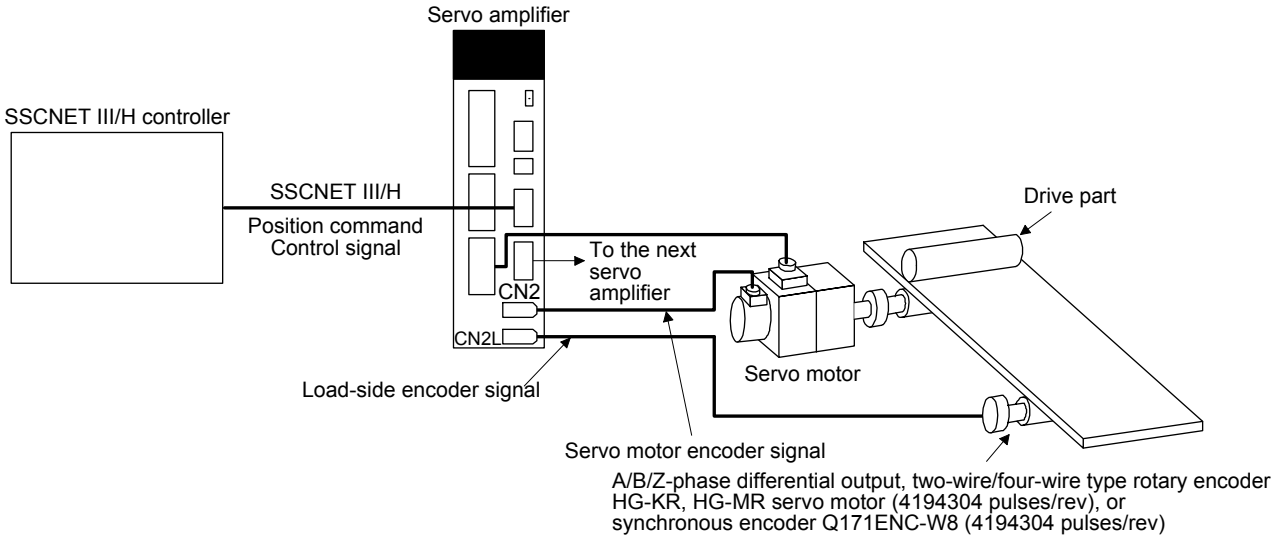

17.3.2 Scale measurement encoder

> **POINT**
> ●Always use the scale measurement encoder cable introduced in this section. Using other products may cause a malfunction.
> ●For details of the scale measurement encoder specifications, performance and assurance, contact each encoder manufacturer.

An absolute type linear encoder is necessary to configure an absolute position detection system under scale measurement function using a linear encoder. In this case, the encoder battery need not be installed to the servo amplifier. When a rotary encoder is used, an absolute position detection system can be configured by installing the encoder battery to the servo amplifier. In this case, the battery life will be shorter because the power consumption is increased as the power is supplied to the two encoders of motor side and load side.

(1) Linear encoder
Refer to "Linear Encoder Instruction Manual" for usable linear encoders.

(2) Rotary encoder
When a rotary encoder is used as a scale measurement encoder, use the following servo motor or synchronous encoder as the encoder.

Servo motor and synchronous encoder that can be used as encoder

	HG-KR	HG-MR	Synchronous encoder Q171ENC-W8
MR-J4-_B_	○	○	
MR-J4-_B_-RJ	○	○	○

Use a two-wire type encoder cable for MR-J4-_B_ servo amplifiers. Do not use MR-EKCBL30M-L, MR-EKCBL30M-H, MR-EKCBL40M-H, or MR-EKCBL50M-H as they are four-wire type.
When an encoder cable of 30 m to 50 m is needed, fabricate a two-wire type encoder cable according to appendix 9.

(3) Configuration diagram of encoder cable
Configuration diagram for servo amplifier and scale measurement encoder is shown below. Cables vary depending on the scale measurement encoder.

(a) Linear encoder
Refer to Linear Encoder Instruction Manual for encoder cables for linear encoder.

1) MR-J4-_B_ servo amplifier

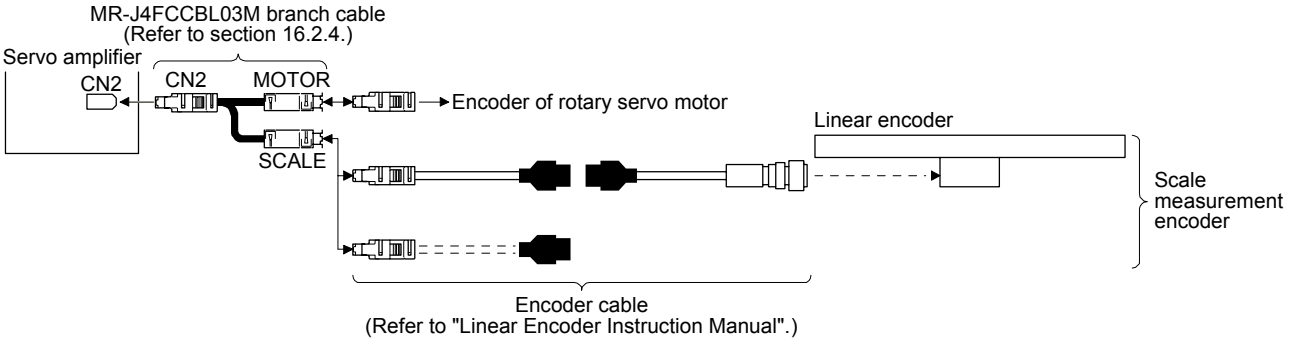

2) MR-J4-_B_-RJ servo amplifier
You can connect the linear encoder without using a branch cable shown in 1) for MR-J4-_B_-RJ servo amplifier. You can also use a four-wire type linear encoder.

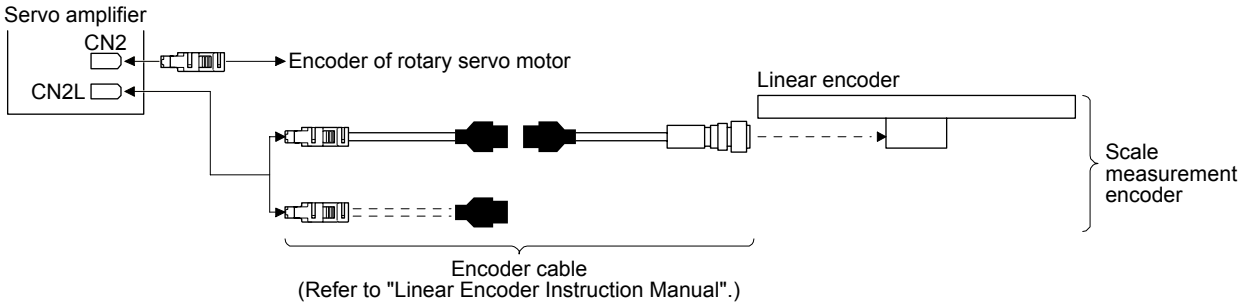

(b) Rotary encoder
Refer to "Servo Motor Instruction Manual (Vol. 3)" for encoder cables for rotary encoders.

1) MR-J4-_B_ servo amplifier

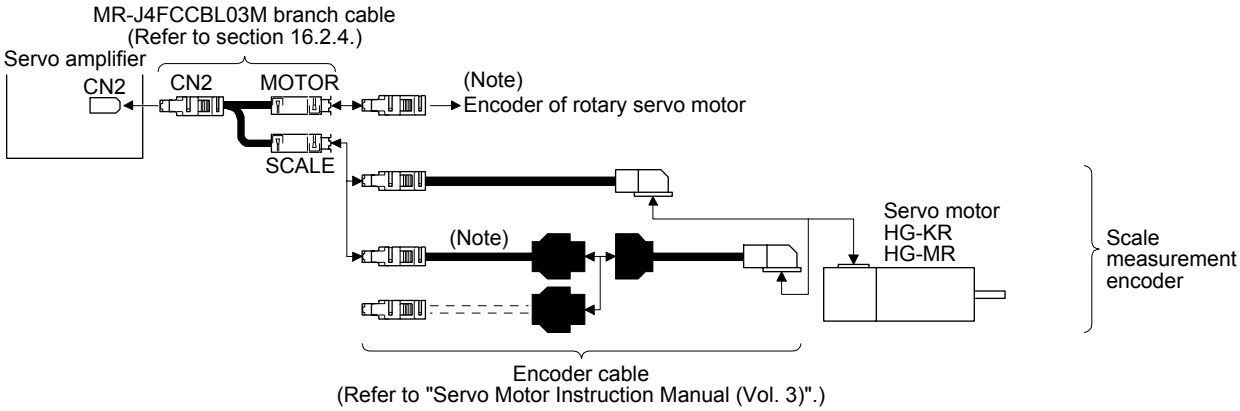

Note. Use a two-wire type encoder cable. A four-wire type linear encoder cable cannot be used.

2) MR-J4-_B_-RJ servo amplifier
You can connect the rotary encoder without using a branch cable shown in 1) for MR-J4-_B-RJ servo amplifier. You can also use a four-wire type rotary encoder.

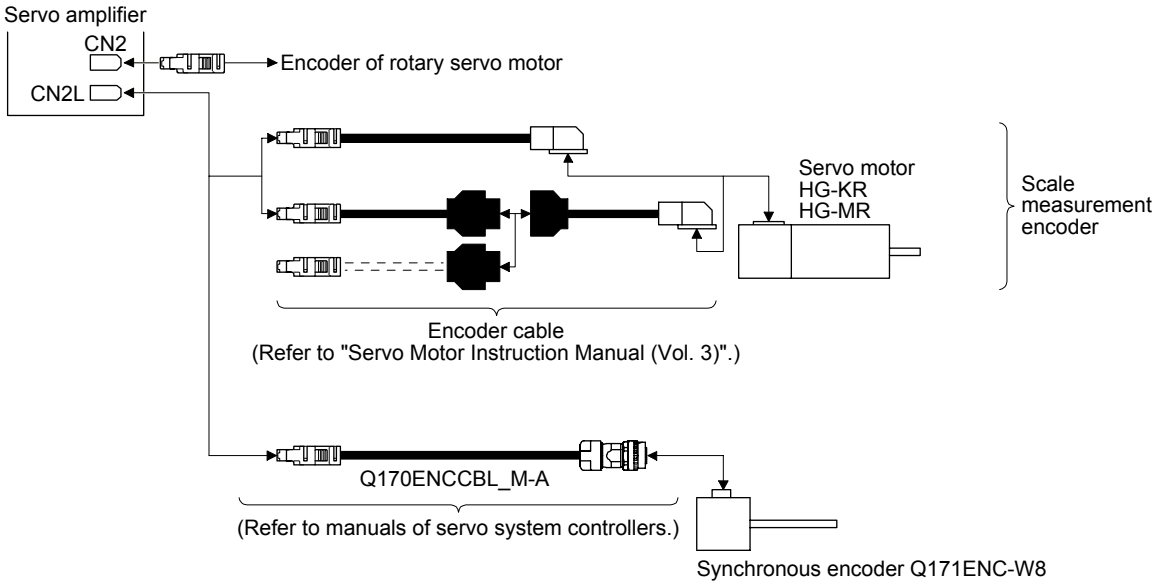

(4) MR-J4FCCBL03M branch cable

Use MR-J4FCCBL03M branch cable to connect the scale measurement encoder to CN2 connector. When fabricating the branch cable using MR-J3THMCN2 connector set, refer to "Linear Encoder Instruction Manual".

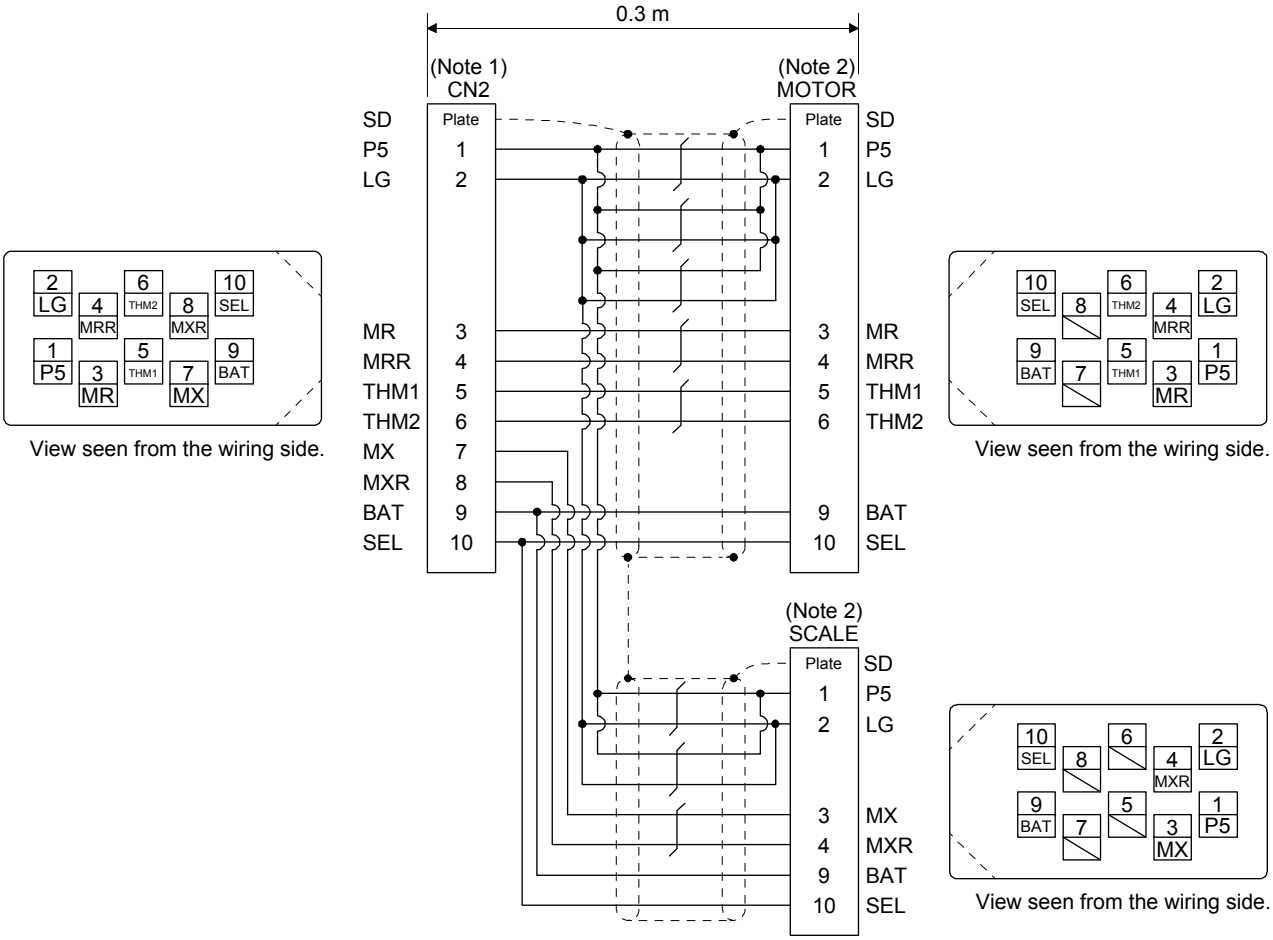

Note 1. Receptacle: 36210-0100PL, shell kit: 36310-3200-008 (3M)

2. Plug: 36110-3000FD, shell kit: 36310-F200-008 (3M)

17.3.3 How to use scale measurement function

(1) Selection of scale measurement function

The scale measurement function is set with the combination of basic setting parameters [Pr. PA01] and [Pr. PA22].

(a) Operation mode selection

The scale measurement function can be used during semi closed loop system (standard control mode). Set [Pr. PA01] to "_ _ 0 _".

[Pr. PA01]

1	0		0

Operation mode selection

Setting value	Operation mode	Control unit
0	Semi closed loop system (Standard control mode)	Servo motor-side resolution unit

(b) Scale measurement function selection

Select the scale measurement function. Select "1 _ _ _" (Used in absolute position detection system) or "2 _ _ _" (Used in incremental system) according to the encoder you use.

[Pr. PA22]

	0	0	0

Scale measurement function selection
0: Disabled
1: Used in absolute position detection system
2: Used in incremental system

(2) Selection of scale measurement encoder communication method and polarity.

For MR-J4-_B_-RJ servo amplifiers, set the following "Load-side encoder communication method selection" of [Pr. PC26] as necessary.

The communication method differs depending on the scale measurement encoder type. For the communication method for using a linear encoder as scale measurement encoder, refer to "Linear Encoder Instruction Manual". Select "Four-wire type" because there is only four-wire type for synchronous encoder.

Select the cable to be connected to CN2L connector in [Pr. PC26].

[Pr. PC26]

	0	0	0

Load-side encoder cable communication method selection
0: Two-wire type
1: Four-wire type
Incorrect setting will trigger [AL. 70] and [AL. 71].
Setting "1" while using an MR-J4-_B_ servo amplifier will trigger [AL. 37].

Select a polarity of the scale measurement encoder with the following "Load-side encoder pulse count polarity selection" and "Selection of A/B/Z-phase input interface encoder Z-phase connection judgement function" of [Pr. PC27] as necessary.

POINT

●"Encoder pulse count polarity selection" in [Pr. PC27] is not related to [Pr. PA14 Rotation direction selection]. Make sure to set the parameter according to the relationships between servo motor and linear encoder/rotary encoder.

(a) Parameter setting method

1) Select a encoder pulse count polarity.

This parameter is used to set the load-side encoder polarity to be connected to CN2L connector in order to match the CCW direction of servo motor and the increasing direction of load-side encoder feedback. Set this as necessary.

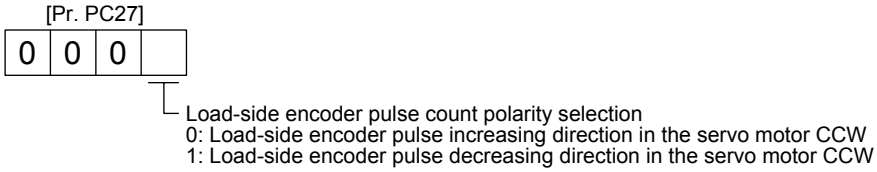

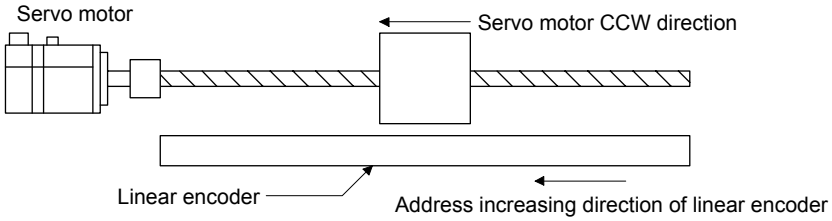

2) A/B/Z-phase input interface encoder Z-phase connection judgement function

This function can trigger an alarm by detecting non-signal for Z phase.

The Z-phase connection judgement function is enabled by default. To disable the Z-phase connection judgement function, set [Pr. PC27].

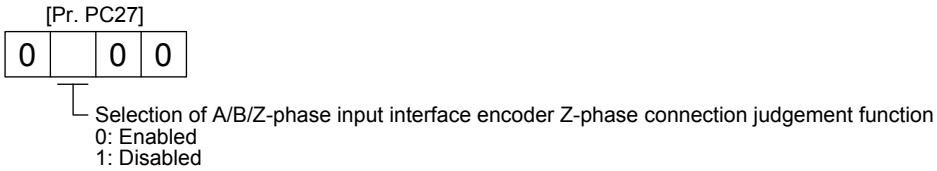

(b) How to confirm the scale measurement encoder feedback direction

You can confirm the directions of the cumulative feedback pulses of servo motor encoder and the load-side cumulative feedback pulses are matched by moving the device (scale measurement encoder) manually in the servo-off status. If mismatched, reverse the polarity.

(3) Confirmation of scale measurement encoder position data

Check the scale measurement encoder mounting and parameter settings for any problems.

Operate the device (scale measurement encoder) to check the data of the scale measurement encoder is renewed correctly. If the data is not renewed correctly, check the wiring and parameter settings.

Change the scale polarity as necessary.

App. 1 Peripheral equipment manufacturer (for reference)

Names given in the table are as of March 2014.

Manufacturer	Reference
NEC TOKIN	NEC TOKIN Corporation
Kitagawa Industries	Kitagawa Industries Co., Ltd.
JST	J.S.T. Mfg. Co., Ltd.
Junkosha	Purchase from Toa Electric Industrial Co. Ltd., Nagoya Branch
3M	3M
SEIWA ELECTRIC	Seiwa Electric Mfg. Co. Ltd.
Soshin Electric	Soshin Electric Co., Ltd.
TE Connectivity	TE Connectivity
TDK	TDK Corporation
Molex	Molex

App. 2 Handling of AC servo amplifier batteries for the United Nations Recommendations on the Transport of Dangerous Goods

United Nations Recommendations on the Transport of Dangerous Goods Rev. 15 (hereinafter Recommendations of the United Nations) has been issued. To reflect this, transport regulations for lithium metal batteries are partially revised in the Technical Instruction (ICAO-TI) by the International Civil Aviation Organization (ICAO) and the International Maritime Dangerous Goods Code (IMDG Code) by the International Maritime Organization (IMO).
To comply the instruction and code, we have modified the indication on the package for general-purpose AC servo batteries.
The above change will not affect the function and performance of the product.

(1) Target model

(a) Battery (cell)

Model	Option model
ER6	MR-J3BAT
ER17330	MR-BAT
	A6BAT

(b) Battery unit (assembled)

Model	Option model
ER17330	MR-J2M-BT
CR17335A	MR-BAT6V1
	MR-BAT6V1SET
	MR-BAT6V1BJ

(2) Purpose

Safer transportation of lithium metal batteries.

(3) Change in regulations

The following points are changed for lithium metal batteries transportation by sea or air due to Recommendations of the United Nations Rev. 15 and ICAO-TI 2009-2010 edition. For lithium metal batteries, cells are classified as UN3090, and batteries contained in or packed with equipment are classified as UN3091.

(a) A package containing 24 cells or 12 batteries or less that are not contained in equipment are no longer exempt from the following: attachment of a handling label, submission of the Shipper's Declaration for Dangerous Goods, and a 1.2 m drop test.

(b) A battery handling label (size: 120 mm × 110 mm) is required. Emergency telephone number must be filled out in the additional handling information of the Shipper's Declaration for Dangerous Goods.

(c) New handling label design containing battery illustration must be used. (only air transportation)

Figure. Example of Mitsubishi Label with Battery Illustration

(4) Action taken by Mitsubishi
The following caution will be added to the packages of the target batteries.
"Containing lithium metal battery. Regulations apply for transportation."

(5) Transportation precaution for customers
For sea or air transportation, attaching the handling label (figure) and the Shipper's Declaration for Dangerous Goods are required to the package of a Mitsubishi cell or battery. In addition, attaching them to the outer package containing several packages of Mitsubishi cells or batteries are also required. Please attach the documentations in the specified design to the packages and the outer packages.

App. 3 Symbol for the new EU Battery Directive

Symbol for the new EU Battery Directive (2006/66/EC) that is plastered to general-purpose AC servo battery is explained here.

Note. This symbol mark is for EU countries only.

This symbol mark is according to the directive 2006/66/EC Article 20 Information for end-users and Annex II.
Your MITSUBISHI ELECTRIC product is designed and manufactured with high quality materials and components which can be recycled and/or reused.
This symbol means that batteries and accumulators, at their end-of-life, should be disposed of separately from your household waste.
If a chemical symbol is printed beneath the symbol shown above, this chemical symbol means that the battery or accumulator contains a heavy metal at a certain concentration.
This will be indicated as follows.
Hg: mercury (0.0005%), Cd: cadmium (0.002%), Pb: lead (0.004%)
In the European Union there are separate collection systems for used batteries and accumulators. Please, dispose of batteries and accumulators correctly at your local community waste collection/recycling centre.
Please, help us to conserve the environment we live in!

App. 4 Compliance with global standards

App. 4.1 Terms related to safety (IEC 61800-5-2 Stop function)

STO function (Refer to IEC/EN 61800-5-2: 2007 4.2.2.2 STO.)
MR-J4 servo amplifiers have the STO function. The STO function shuts down energy to servo motors, thus removing torque. This function electronically cuts off power supply in the servo amplifier.

App. 4.2 About safety

This section explains safety of users and machine operators. Please read the section carefully before mounting the equipment.

App. 4.2.1 Professional engineer

Only professional engineers should mount MR-J4 servo amplifiers.
Here, professional engineers should meet the all conditions below.

(1) Persons who took a proper engineering training or qualified persons who are engaged in electrical equipment
Please note if you can take proper engineering training at your local Mitsubishi Electric office. Contact your local sales office for schedules and locations.

(2) Persons who can access to operating manuals for the protective devices (e.g. light curtain) connected to the safety control system. A person who have read and familiarized himself/herself with the manuals.

App. 4.2.2 Applications of the devices

MR-J4 servo amplifiers comply with the following safety standards.
ISO/EN ISO 13849-1 Category 3 PL d, IEC/EN 62061 SIL CL 2, IEC/EN 61800-5-2 SIL 2 (STO), IEC/EN 61800-5-1, IEC/EN 61800-3, IEC/EN 60204-1
In addition, MR-J4 servo amplifiers can be used with the MR-J3-D05 safety logic unit or safety PLC.

App. 4.2.3 Correct use

Always use the MR-J4 servo amplifiers within specifications (voltage, temperature, etc. Refer to each instruction manual for details.). Mitsubishi Electric Co. accepts no claims for liability if the equipment is used in any other way or if modifications are made to the device, even in the context of mounting and installation.

⚠WARNING ●It takes 15 minutes for capacitor discharging. Do not touch the unit and terminals immediately after power off.

(1) Peripheral device and power wiring
The followings are selected based on IEC/EN 61800-5-1, UL 508C, and CSA C22.2 No.14.

(a) Local wiring and crimping tool
Use only copper wires for wiring. The following table shows the wire sizes [AWG] and the crimp terminal symbols rated at 75 °C/60 °C.

1) 200 V class/100 V class

Servo amplifier	75 °C/60 °C wire [AWG] (Note 2)			
	L1/L2/L3 ⏚	L11/L21	P+/C	U/V/W/⏚ (Note 3)
MR-J4-10_(1)/MR-J4-20_(1)/MR-J4-40_(1)/ MR-J4-60_/MR-J4-70_/MR-J4-100_/MR-J4-200_	14/14	14/14	14/14	14/14
MR-J4-350_	12/12			12/12
MR-J4-500_ (Note 1)	10: a/10: a	14: c/14: c	14: c/14: c	10: b/10: b
MR-J4-700_ (Note 1)	8: b/8: b		12: a/12: a	8: b/8: b
MR-J4-11K_ (Note 1)	6: d/4: f		12: e/12: e	4: f/4: f
MR-J4-15K_ (Note 1)	4: f/3: f		10: e/10: e	3: g/2: g
MR-J4-22K_ (Note 1)	1: h/-: -		10: i/10: i	1: j/-: -
MR-J4W_-_B	14/14 (Note 4)	14/14	14/14	14/14

Note 1. To connect these models to a terminal block, be sure to use the screws that come with the terminal block.
2. Alphabets in the table indicate crimping tools. Refer to the following table for the crimp terminals and crimping tools.
3. Select wire sizes depending on the rated output of the servo motors. The values in the table are sizes based on rated output of the servo amplifiers.
4. Use the crimp terminal c for the PE terminal of the servo amplifier.

Table: Recommended crimp terminals

Symbol	Servo amplifier-side crimp terminals				Manufacturer
	Crimp terminal (Note 2)	Applicable tool			
		Body	Head	Dice	
a	FVD5.5-4	YNT-1210S			JST
b (Note 1)	8-4NS	YHT-8S			
c	FVD2-4	YNT-1614			
d	FVD14-6	YF-1	YNE-38	DH-122 DH-112	
e	FVD5.5-6	YNT-1210S			
f	FVD22-6	YF-1	YNE-38	DH-123 DH-113	
g	FVD38-6	YF-1	YNE-38	DH-124 DH-114	
h	R60-8	YF-1	YET-60-1	TD-125 TD-113	
i	FVD5.5-8	YNT-1210S			
j	CB70-S8	YF-1	YET-150-1	TD-226 TD-213	

Note 1. Coat the crimping part with an insulation tube.
2. Some crimp terminals may not be mounted depending on the size. Make sure to use the recommended ones or equivalent ones.

2) 400 V class

Servo amplifier	Wire [AWG] (Note 2)			
	L1/L2/L3 ⏚	L11/L21	P+/C	U/V/W/⏚ (Note 3)
MR-J4-60_4/MR-J4-100_4	14/14	14/14	14/14	14/14
MR-J4-200_4				
MR-J4-350_4				
MR-J4-500_4 (Note 1)	14: b/14: b	14: b/14: b	14: b/14: b	12: a/10: a
MR-J4-700_4 (Note 1)	12: a/12: a			10: a/10: a
MR-J4-11K_4 (Note 1)	10: d/10: d		14: e/14: e	8: f/8: f
MR-J4-15K_4 (Note 1)	8: f/8: f		12: d/12: d	6: c/4: c
MR-J4-22K_4 (Note 1)	6: g/4: g		12: h/12: h	6: i/4: i

Note 1. To connect these models to a terminal block, be sure to use the screws that come with the terminal block.
2. Alphabets in the table indicate crimping tools. Refer to the following table for the crimp terminals and crimping tools.
3. Select wire sizes depending on the rated output of the servo motors. The values in the table are sizes based on rated output of the servo amplifiers.

Table: Recommended crimp terminals

Symbol	Servo amplifier-side crimp terminals				Manufacturer
	Crimp terminal (Note)	Applicable tool			
		Body	Head	Dice	
a	FVD5.5-4	YNT-1210S			JST
b	FVD2-4	YNT-1614			
c	FVD14-6	YF-1	YNE-38	DH-122/DH-112	
d	FVD5.5-6	YNT-1210S			
e	FVD2-6	YNT-1614			
f	FVD8-6	YF-1	YNE-38	DH-121/DH-111	
g	FVD14-8	YF-1	YNE-38	DH-122/DH-112	
h	FVD5.5-8	YNT-1210S			
i	FVD22-8	YF-1	YNE-38	DH-123/DH-113	

Note. Some crimp terminals may not be mounted depending on the size. Make sure to use the recommended ones or equivalent ones.

(b) Selection example of MCCB and fuse

When a servo amplifier is protected by T class fuses or circuit breaker having an interrupting rating not less than 300 A effective value and 240 V maximum, use T class fuses or molded-case circuit breaker (UL489 Listed MCCB) as the following table. The T class fuses and molded-case circuit breakers in the table are selected examples based on rated I/O of the servo amplifiers. When you select a smaller capacity servo motor to connect it to the servo amplifier, you can also use smaller capacity T class fuses or molded-case circuit breaker than ones in the table. For selecting ones other than Class T fuses and molded-case circuit breakers below, refer to section 11.10.

1) 200 V class

Servo amplifier	Molded-case circuit breaker (240 V AC)	Fuse (300 V)
MR-J4-10_/MR-J4-20_/MR-J4-40_/MR-J4-60_/MR-J4-70_/ MR-J4W2-22B	NF50-SVFU-5A (50 A frame 5 A)	10 A
MR-J4-60_ (Note)/MR-J4-70_ (Note)/MR-J4-100_/ MR-J4W2-22B (Note)/MR-J4W2-44B/MR-J4W2-77B/ MR-J4W3-222B/MR-J4W3-444B	NF50-SVFU-10A (50 A frame 10 A)	15 A
MR-J4-200_/MR-J4W2-44B (Note)/MR-J4W2-1010B	NF50-SVFU-15A (50 A frame 15 A)	30 A
MR-J4-350_/MR-J4W2-77B (Note)/MR-J4W3-444B (Note)	NF50-SVFU-20A (50 A frame 20 A)	40 A
MR-J4-500_	NF50-SVFU-30A (50 A frame 30 A)	60 A
MR-J4-700_	NF50-SVFU-40A (50 A frame 40 A)	80 A
MR-J4-11K_	NF100-CVFU-60A (100 A frame 60 A)	125 A
MR-J4-15K_	NF100-CVFU-80A (100 A frame 80 A)	150 A
MR-J4-22K_	NF225-CWU-125A (225 A frame 125 A)	300 A

Note. For 1-phase 200 V AC power input

2) 400 V class

Servo amplifier	Molded-case circuit breaker (480 V AC)	Fuse (600 V)
MR-J4-60_4	NF100-HRU-5A (100 A frame 5 A)	10 A
MR-J4-100_4	NF100-HRU-5A (100 A frame 5 A)	10 A
MR-J4-200_4	NF100-HRU-10A (100 A frame 10 A)	15 A
MR-J4-350_4	NF100-HRU-10A (100 A frame 10 A)	20 A
MR-J4-500_4	NF100-HRU-15A (100 A frame 15 A)	30 A
MR-J4-700_4	NF100-HRU-20A (100 A frame 20 A)	40 A
MR-J4-11K_4	NF100-HRU-30A (100 A frame 30 A)	60 A
MR-J4-15K_4	NF100-HRU-40A (100 A frame 40 A)	80 A
MR-J4-22K_4	NF100-HRU-60A (100 A frame 60 A)	125 A

3) 100 V class

Servo amplifier	Molded-case circuit breaker (120 V AC)	Fuse (300 V)
MR-J4-10_1/MR-J4-20_1/MR-J4-40_1	NV50-SVFU-15A (50 A frame 15 A)	20 A

(c) Power supply

This servo amplifier can be supplied from star-connected supply with grounded neutral point of overvoltage category III set forth in IEC/EN 60664-1. However, when you use the neutral point for single phase supply, a reinforced insulating transformer is required in the power input section. For the interface power supply, use an external 24 V DC power supply with reinforced insulation on I/O terminals.

(d) Grounding

To prevent an electric shock, always connect the protective earth (PE) terminal (marked ⏚) of the servo amplifier to the protective earth (PE) of the cabinet. Do not connect two grounding cables to the same protective earth (PE) terminal. Always connect cables to the terminals one-to-one.

If using an earth-leakage current breaker, always ground the protective earth (PE) terminal of the servo amplifier to prevent an electric shock. Only an RCD (earth-leakage current breaker) of type B can be used for the power supply side of the product.

(2) EU compliance

The MR-J4 servo amplifiers are designed to comply with the following directions to meet requirements for mounting, using, and periodic technical inspections: Machinery directive (2006/42/EC), EMC directive (2004/108/EC), and Low-voltage directive (2006/95/EC).

(a) EMC requirement

MR-J4 servo amplifiers comply with category C3 in accordance with IEC/EN 61800-3. As for I/O wires (max. length 10 m. However, 3 m for STO cable for CN8.) and encoder cables (max. length 50 m), connect them to a shielded grounding. Use a EMC filter and surge protector on the primary side. The following shows recommended products.

EMC filter: Soshin Electric HF3000A-UN series

Surge protector: Okaya Electric Industries RSPD-250-U4 series

- MR-J4 Series are not intended to be used on a low-voltage public network which supplies domestic premises;
- radio frequency interference is expected if used on such a network.

The installer shall provide a guide for Installation and use, including recommended mitigation devices.

(b) For Declaration of Conformity (DoC)

Hereby, MITSUBISHI ELECTRIC EUROPE B.V., declares that the servo amplifiers are in compliance with the necessary requirements and standards (2006/42/EC, 2004/108/EC and 2006/95/EC). For the copy of Declaration of Conformity, contact your local sales office.

(3) USA/Canada compliance

This servo amplifier is designed in compliance with UL 508C and CSA C22.2 No.14.

(a) Installation

The minimum cabinet size is 150% of each MR-J4 servo amplifier's volume. Also, design the cabinet so that the ambient temperature in the cabinet is 55 ˚C or less. The servo amplifier must be installed in a metal cabinet. For environment, the units should be used in open type (UL 50) and overvoltage category III or lower. The servo amplifier needs to be installed at or below of pollution degree 2. For connection, use only copper wires.

(b) Short-circuit current rating (SCCR)

Suitable For Use On A Circuit Capable Of Delivering Not More Than 100 kA rms Symmetrical Amperes, 500 Volts Maximum.

(c) Overload protection characteristics

The MR-J4 servo amplifiers have servo motor overload protective function. (It is set on the basis (full load current) of 120% rated current of the servo amplifier.)

(d) Over-temperature protection for motor
Motor Over temperature sensing is not provided by the drive.

(e) Capacitor discharge
It takes 15 minutes for capacitor discharging. Do not touch the unit and terminals immediately after power off.

(f) Branch circuit protection
For installation in United States, branch circuit protection must be provided, in accordance with the National Electrical Code and any applicable local codes.
For installation in Canada, branch circuit protection must be provided, in accordance with the Canada Electrical Code and any applicable provincial codes.

(4) South Korea compliance
This product complies with the Radio Wave Law (KC mark). However, some applications are being processed. For the situation of compliance, contact your local sales office. Please note the following to use the product.
이 기기는 업무용 (A급) 전자파적합기기로서 판 매자 또는 사용자는 이 점을 주의하시기 바라며,
가정외의 지역에서 사용하는 것을 목적으 로 합니다.
(The product is for business use (Class A) and meets the electromagnetic compatibility requirements. The seller and the user must note the above point, and use the product in a place except for home. In addition, use an EMC filter, surge protector, ferrite core, and line noise filter on the primary side for inputs. Use a ferrite core and line noise filter for outputs. Use a distance greater than 30 m between the product and third party sensitive radio communications for an MR-J4-22K_.)

App. 4.2.4 General cautions for safety protection and protective measures

Observe the following items to ensure proper use of the MELSERVO MR-J4 servo amplifiers.

(1) For safety components and installing systems, only qualified personnel and professional engineers should perform.

(2) When mounting, installing, and using the MELSERVO MR-J4 servo amplifier, always observe standards and directives applicable in the country.

(3) The item about noises of the test notices in the manuals should be observed.

App. 4.2.5 Residual risk

(1) Be sure that all safety related switches, relays, sensors, etc., meet the required safety standards.

(2) Perform all risk assessments and safety level certification to the machine or the system as a whole.

(3) If the upper and lower power modules in the servo amplifier are shorted and damaged simultaneously, the servo motor may make a half revolution at a maximum.

(4) Only qualified personnel are authorized to install, start-up, repair or service the machines in which these components are installed. Only trained engineers should install and operate the equipment. (ISO 13849-1 Table F.1 No.5)

(5) Separate the wiring for functional safety from other signal wirings. (ISO 13849-1 Table F.1 No.1)

(6) Protect the cables with appropriate ways (routing them in a cabinet, using a cable guard, etc.).

(7) Keep the required clearance/creepage distance depending on voltage you use.

App. 4.2.6 Disposal

Disposal of unusable or irreparable devices should always occur in accordance with the applicable country-specific waste disposal regulations. (Example: European Waste 16 02 14)

App. 4.2.7 Lithium battery transportation

To transport lithium batteries, take actions to comply with the instructions and regulations such as the United Nations (UN), the International Civil Aviation Organization (ICAO), and the International Maritime Organization (IMO).
The battery options (MR-BAT6V1SET and MR-BAT6V1) are assembled batteries from two batteries (lithium metal battery CR17335A) which are not subject to the dangerous goods (Class 9) of the UN Recommendations.

App. 4.3 Mounting/dismounting

Installation direction and clearances

⚠CAUTION

- The devices must be installed in the specified direction. Not doing so may cause a malfunction.
- Mount the servo amplifier on a cabinet which meets IP54 in the correct vertical direction to maintain pollution degree 2.
- Note the followings for supplied regenerative resistors of 11 kW to 22 kW servo amplifiers because they do not have protect covers.
  - Touching the resistor will cause a burn because the surface of the parts is a resistive element and very high temperature.
  - Even if the power turned off, touching the resistor will cause an electric shock because the capacitor of the servo amplifier is charged for a while.

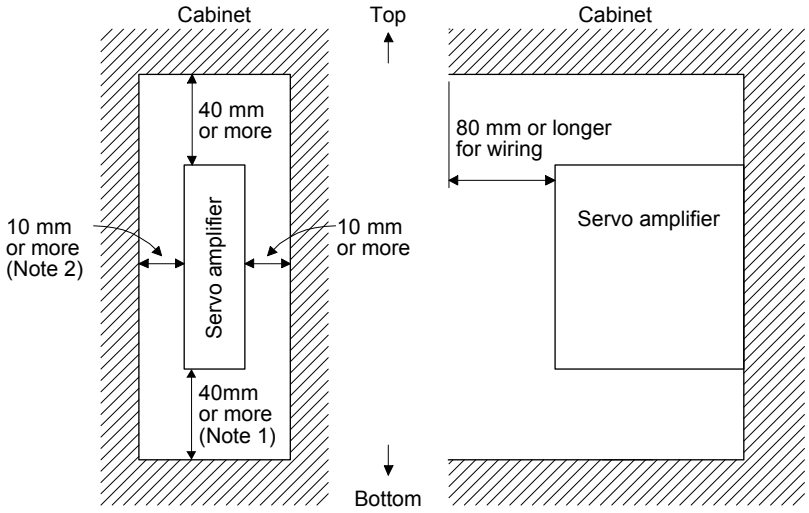

Note 1. For 11 kW to 22 kW servo amplifiers, the clearance between the bottom and ground will be 120 mm or more.
2. For MR-J4-500_, the clearance on the left side will be 25 mm or more.

App. 4.4 Electrical Installation and configuration diagram

⚠WARNING	●Turn off the molded-case circuit breaker (MCCB) to avoid electrical shocks or damages to the product before starting the installation or wiring.

⚠CAUTION	●The installation complies with IEC/EN 60204-1. The voltage supply to machines must be 20 ms of tolerance against instantaneous power failures as specified in IEC/EN 60204-1.

The following shows representative configuration examples to conform to the IEC/EN/UL/CSA standards.

(1) 3-phase input for MR-J4 1-axis servo amplifier

(a) 200 V class

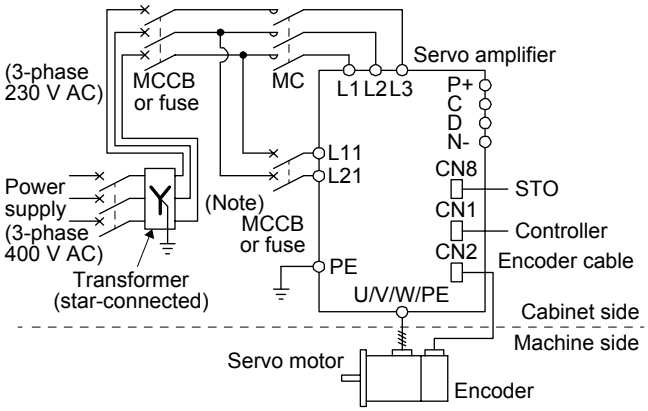

Note. When the wire sizes of L1 and L11 are the same, MCCB or fuse is not required.

(b) 400 V class

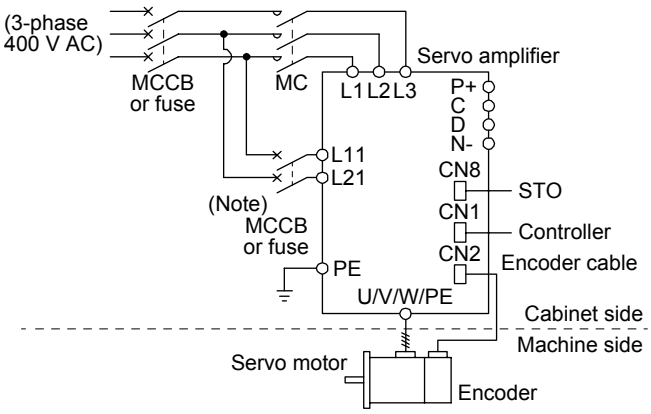

Note. When the wire sizes of L1 and L11 are the same, MCCB or fuse is not required.

(2) 1-phase input for MR-J4 1-axis servo amplifier

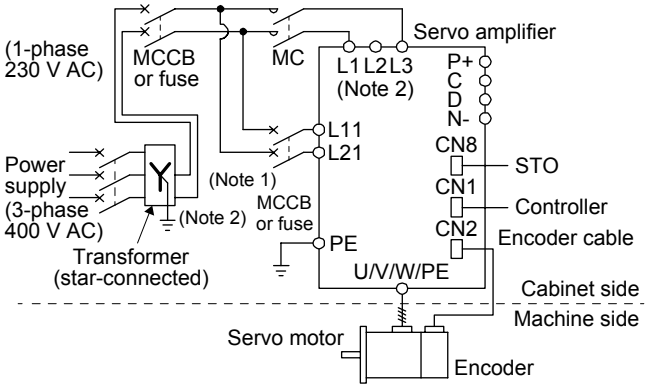

Note 1. When the wire sizes of L1 and L11 are the same, MCCB or fuse is not required.
2. Step down this to 100 V for the 100 V class servo amplifiers and connect the main circuit power supply lines to L1 and L2.

(3) 3-phase input for MR-J4 multi-axis servo amplifier

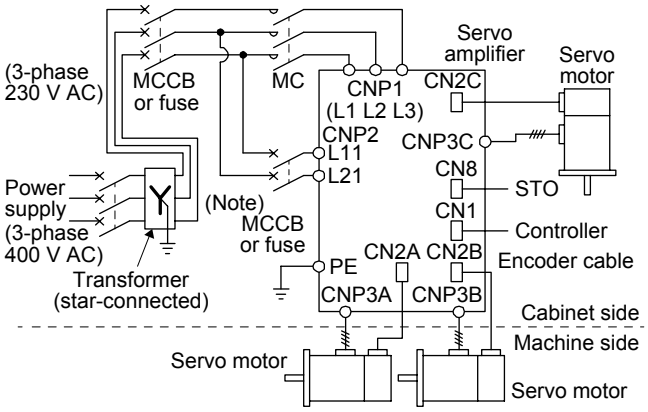

Note. When the wire sizes of L1 and L11 are the same, MCCB or fuse is not required.

(4) 1-phase input for MR-J4 multi-axis servo amplifier

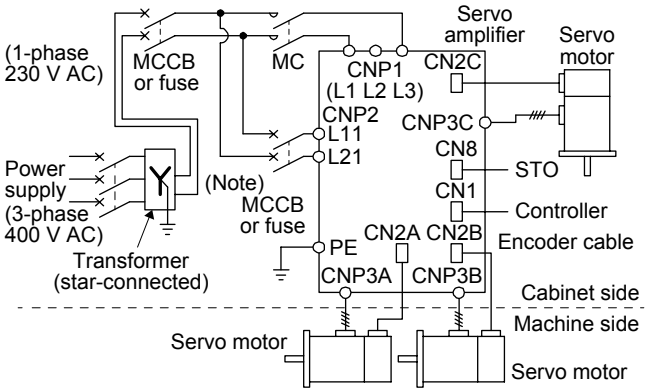

Note. When the wire sizes of L1 and L11 are the same, MCCB or fuse is not required.

The control circuit connectors described by rectangles are safely separated from the main circuits described by circles.
The connected motors will be limited as follows.

(1) HG/HF/HC/HA series servo motors (Mfg.: Mitsubishi Electric)

(2) Using a servo motor complied with IEC60034-1 and Mitsubishi Electric encoder (OBA, OSA)

App. 4.5 Signal

App. 4.5.1 Signal

The following shows MR-J4-10B signals as a typical example.

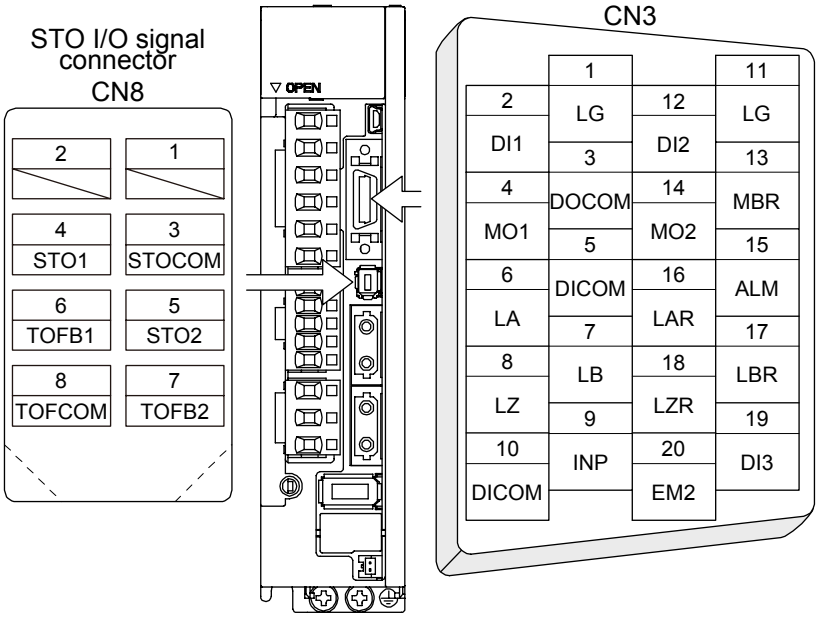

App. 4.5.2 Input device

Input device

Symbol	Device	Connector	Pin No.
EM2	Forced stop 2	CN3	20
STOCOM	Common terminal for input signals STO1/STO2	CN8	3
STO1	STO1 state input		4
STO2	STO2 state input		5

Output device

Symbol	Device	Connector	Pin No.
TOFCOM	Common terminal for monitor output signal in STO state	CN8	8
TOFB1	Monitor output signal in STO1 state		6
TOFB2	Monitor output signal in STO2 state		7

Power supply

Symbol	Device	Connector	Pin No.
DICOM	Digital I/F power supply input	CN3	5, 10
DOCOM	Digital I/F common		3
SD	Shield		Plate

App. 4.6 Maintenance and service

⚠WARNING	●To avoid an electric shock, only qualified personnel should attempt inspections. For repair and parts replacement, contact your local sales office.

⚠CAUTION	●Do not perform insulation resistance test on the servo amplifier. Otherwise, it may cause a malfunction. ●Do not disassemble and/or repair the equipment on customer side.

App. 4.6.1 Inspection items

It is recommended that the following points periodically be checked.

(1) Check for loose terminal block screws. Retighten any loose screws.

(a) 200 V class/100 V class

Servo amplifier	Tightening torque [N•m]														
	L1	L2	L3	N-	P3	P4	P+	C	D	L11	L21	U	V	W	PE
MR-J4-10_(1)/MR-J4-20_(1)/ MR-J4-40_(1)/MR-J4-60_/ MR-J4-70_/MR-J4-100_/ MR-J4-200_/MR-J4-350_															1.2
MR-J4-500_	1.2									0.8		1.2			
MR-J4-700_	1.2									0.8		1.2			
MR-J4-11K_/MR-J4-15K_	3.0									1.2		3.0			
MR-J4-22K_	6.0									1.2		6.0			
MR-J4W_-_B															1.2

(b) 400 V class

Servo amplifier	Tightening torque [N•m]													
	L1	L2	L3	N-	P3	P4	P+	C	L11	L21	U	V	W	PE
MR-J4-60_4/MR-J4-100_4/ MR-J4-200_4/MR-J4-350_4														1.2
MR-J4-500_4	1.2								0.8		1.2			
MR-J4-700_4	1.2								0.8		1.2			
MR-J4-11K_4/MR-J4-15K_4	3.0								1.2		3.0			
MR-J4-22K_4	6.0								1.2		6.0			

(2) Check servo motor bearings, brake section, etc. for unusual noise.

(3) Check the cables and the like for scratches or cracks. Perform periodic inspection according to operating conditions.

(4) Check that the connectors are securely connected to the servo motor.

(5) Check that the wires are not coming out from the connector.

(6) Check for dust accumulation on the servo amplifier.

(7) Check for unusual noise generated from the servo amplifier.

(8) Check the servo motor shaft and coupling for connection.

App. 4.6.2 Parts having service lives

Service lives of the following parts are listed below. However, the service life vary depending or operating methods and environment. If any fault is found in the parts, they must be replaced immediately regardless of their service lives. For parts replacement, please contact your local sales office.

<table>
<tr><th colspan="3">Part name</th><th>Life guideline</th></tr>
<tr><td colspan="3">Smoothing capacitor</td><td>(Note 4) 10 years</td></tr>
<tr><td colspan="3">Relay</td><td>Number of power-on, forced stop and controller forced stop times: 100 000 times
Number of on and off for STO: 1,000,000 times</td></tr>
<tr><td colspan="3">Cooling fan</td><td>10,000 hours to 30,000 hours (2 years to 3 years)</td></tr>
<tr><td rowspan="4">Battery backup time</td><td rowspan="2">(Note 1)
MR-J4 1-axis servo amplifier</td><td>Rotary servo motor</td><td>Approximately 20,000 hours (equipment power supply: off, ambient temperature: 20 °C)
Approximately 29,000 hours (power-on time ratio: 25%, ambient temperature: 20 °C) (Note 5)</td></tr>
<tr><td>Direct drive motor</td><td>Approximately 5,000 hours (equipment power supply: off, ambient temperature: 20 °C)
Approximately 15,000 hours (power-on time ratio: 25%, ambient temperature: 20 °C) (Note 5)</td></tr>
<tr><td rowspan="2">(Note 2)
MR-J4 multi-axis servo amplifier</td><td>Rotary servo motor</td><td>Approximately 40,000 hours/2 axes, 30,000 hours/3 axes, or 10,000 hours/8 axes
(equipment power supply: off, ambient temperature: 20 °C)
Approximately 55,000 hours/2 axes, 38,000 hours/3 axes, or 15,000 hours/8 axes
(power-on time ratio: 25%, ambient temperature: 20 °C) (Note 5)</td></tr>
<tr><td>Direct drive motor</td><td>Approximately 10,000 hours/2 axes, 7,000 hours/3 axes, or 5,000 hours/4 axes
(equipment power supply: off, ambient temperature: 20 °C)
Approximately 15,000 hours/2 axes, 13,000 hours/3 axes, or 10,000 hours/4 axes
(power-on time ratio: 25%, ambient temperature: 20 °C) (Note 5)</td></tr>
<tr><td colspan="3">(Note 3) Battery life</td><td>5 years from date of manufacture</td></tr>
</table>

Note 1. The data-holding time by the battery using MR-BAT6V1SET. Replace the batteries within three years since the operation start whether the power supply of the servo amplifier is on/off. If the battery is used out of specification, [AL. 25 Absolute position erased] may occur. For other batteries, refer to each servo amplifier instruction manual.

2. The data-holding time by the battery using five MR-BAT6V1s. Replace the batteries within three years since the operation start whether the power supply of the servo amplifier is on/off. If the battery is used out of specification, [AL. 25 Absolute position erased] may occur. For other batteries, refer to each servo amplifier instruction manual.

3. Quality of the batteries degrades by the storage condition. The battery life is 5 years from the production date regardless of the connection status.

4. The characteristic of smoothing capacitor is deteriorated due to ripple currents, etc. The life of the capacitor greatly depends on ambient temperature and operating conditions. The capacitor will reach the end of its life in 10 years of continuous operation in normal air-conditioned environment (40 °C surrounding air temperature or less).

5. The power-on time ratio 25% is equivalent to 8 hours power on for a weekday and off for a weekend.

App. 4.7 Transportation and storage

⚠CAUTION	●Transport the products correctly according to their mass. ●Stacking in excess of the limited number of product packages is not allowed. ●Do not hold the front cover to transport the servo amplifier. Otherwise, it may drop. ●Install the servo amplifier and servo motor in a load-bearing place in accordance with the Instruction Manual. ●Do not get on or put heavy load on the equipment. ●For detailed information on the option battery's transportation and handing, refer to app. 2 and app. 3.

When you keep or use it, please fulfill the following environment.

Item		Environment
Ambient temperature	Operation [°C]	0 to 55 Class 3K3 (IEC/EN 60721-3-3)
	Transportation (Note) [°C]	-20 to 65 Class 2K4 (IEC/EN 60721-3-2)
	Storage (Note) [°C]	-20 to 65 Class 1K4 (IEC/EN 60721-3-1)
Ambient humidity	Operation, transportation, storage	5% to 90 %RH
Vibration resistance	Test condition	10 Hz to 57 Hz with constant amplitude of 0.075 mm 57 Hz to 150 Hz with constant acceleration of 9.8 m/s^2 (1 g) to IEC/EN 61800-5-1 (Test Fc of IEC 60068-2-6)
	Operation	5.9 m/s^2 (0.6 g)
	Transportation (Note)	Class 2M3 (IEC/EN 60721-3-2)
	Storage	Class 1M2 (IEC/EN 60721-3-2)
Pollution degree		2
IP rating		Except terminal block IP20 (IEC/EN 60529) and fan finger guard
		Open type (UL 50)
Altitude	Operation, storage	1000 m or less above sea level
	Transportation	10000 m or less above sea level

Note. In regular transport packaging

App. 4.8 Technical data

App. 4.8.1 MR-J4 servo amplifier

(1) 200 V class/100 V class

Item		MR-J4-10_/MR-J4-20_/ MR-J4-40_/MR-J4-60_/ MR-J4-70_/MR-J4W2-22B/ MR-J4W2-44B/MR-J4W2-77B/ MR-J4W3-222B/MR-J4W3-444B	MR-J4-100_/MR-J4-200_/ MR-J4-350_/MR-J4-500_/ MR-J4-700_/MR-J4W2-1010B/ MR-J4-11K_/MR-J4-15K_/ MR-J4-22K_	MR-J4-10_1/ MR-J4-20_1/ MR-J4-40_1
Power supply	Main circuit (line voltage)	3-phase or 1-phase 200 V AC to 240 V AC, 50 Hz/60 Hz	3-phase 200 V AC to 240 V AC, 50 Hz/60 Hz	1-phase 100 V AC to 120 V AC 50 Hz/60 Hz
	Control circuit (line voltage)	1-phase 200 V AC to 240 V AC, 50 Hz/60 Hz		1-phase 100 V AC to 120 V AC 50 Hz/60 Hz
	Interface (SELV)	24 V DC, (required current capacity: MR-J4-_A, 500 mA; MR-J4-_B, 300 mA; MR-J4W2-_B, 350 mA; MR-J4W3-_B, 450 mA)		
Control method		Sine-wave PWM control, current control method		
Functional safety (STO) IEC/EN 61800-5-2		EN ISO 13849-1 category 3 PL d, IEC 61508 SIL 2, EN 62061 SIL CL 2, and EN 61800-5-2 SIL 2		
Mean time to dangerous failure		MTTFd ≥ 100 [years]		
Effectiveness of fault monitoring of a system or subsystem		DC = 90 [%]		
Average probability of dangerous failures per hour		PFH = 1.68×10^{-10} [1/h]		
Mission time		TM = 20 [years]		
Response performance		8 ms or less (STO input off → energy shut off)		
Pollution degree		2 (IEC/EN 60664-1)		
Overvoltage category		1-phase 100 V AC/200 V AC: II (IEC/EN 60664-1), 3-phase 200 V AC: III (IEC/EN 60664-1)		
Protection class		I (IEC/EN 61800-5-1)		
Short-circuit current rating (SCCR)		100 kA		

(2) 400 V class

Item		MR-J4-60_4/MR-J4-100_4/MR-J4-200_4/MR-J4-350_4/MR-J4-500_4/MR-J4-700_4/ MR-J4-11K_4/MR-J4-15K_4/MR-J4-22K_4
Power supply	Main circuit (line voltage)	3-phase 380 V AC to 480 V AC, 50 Hz/60 Hz
	Control circuit (line voltage)	1-phase 380 V AC to 480 V AC, 50 Hz/60 Hz
	Interface (SELV)	24 V DC, (required current capacity: MR-J4-_A4, 500 mA; MR-J4-_B4, 300 mA)
Control method		Sine-wave PWM control, current control method
Safety function (STO) IEC/EN 61800-5-2		EN ISO 13849-1 category 3 PL d, IEC 61508 SIL 2, EN 62061 SIL CL 2, and EN 61800-5-2 SIL 2
Mean time to dangerous failure		MTTFd ≥100 [years]
Effectiveness of fault monitoring of a system or subsystem		DC = 90 [%]
Average probability of dangerous failures per hour		PFH = 1.68×10^{-10} [1/h]
Mission time		TM = 20 [years]
Response performance		8 ms or less (STO input off → energy shut off)
Pollution degree		2 (IEC/EN 60664-1)
Overvoltage category		III (IEC/EN 60664-1)
Protection class		I (IEC/EN 61800-5-1)
Short-circuit current rating (SCCR)		100 kA

App. 4.8.2 Servo amplifier dimensions

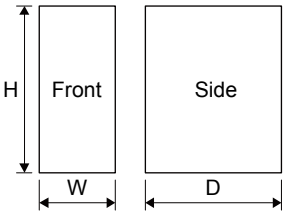

Servo amplifier	Variable dimension table [mm]			Mass [kg]
	W	H	D	
MR-J4-10_(1)/MR-J4-20_(1)	40	168	135	0.8
MR-J4-40_(1)/MR-J4-60_	40	168	170	1.0
MR-J4-70_/MR-J4-100_	60	168	185	1.4
MR-J4-200_	90	168	195	2.1
MR-J4-350_	90	168	195	2.3
MR-J4-500_	105	250	200	4.0
MR-J4-700_	172	300	200	6.2
MR-J4-11K_/MR-J4-15K_	220	400	260	13.4
MR-J4-22K_	260	400	260	18.2
MR-J4W2-22B/MR-J4W2-44B	60	168	195	1.4
MR-J4W2-77B/MR-J4W2-1010B	85	168	195	2.3
MR-J4W3-222B/MR-J4W3-444B	85	168	195	2.3
MR-J4-60_4/MR-J4-100_4	60	168	195	1.7
MR-J4-200_4	90	168	195	2.1
MR-J4-350_4	105	250	200	3.6
MR-J4-500_4	130	250	200	4.3
MR-J4-700_4	172	300	200	6.5
MR-J4-11K_4/MR-J4-15K_4	220	400	260	13.4
MR-J4-22K_4	260	400	260	18.2

App. 4.8.3 Mounting hole

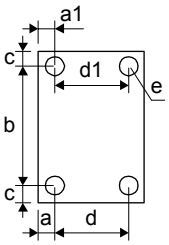

Servo amplifier	Variable dimensions [mm]						Screw size
	a	a1	b	c	d	d1	e
MR-J4-10_(1)/MR-J4-20_(1)/ MR-J4-40_(1)/MR-J4-60_	6	6	156 ± 0.5	6			M5
MR-J4-70_/MR-J4-100_	12	12	156 ± 0.5	6	42 ± 0.3		M5
MR-J4-200_/MR-J4-350_	6	45	156 ± 0.5	6	78 ± 0.3		M5
MR-J4-500_	6	6	235 ± 0.5	7.5	93 ± 0.3	93 ± 0.3	M5
MR-J4-700_	6	6	285 ± 0.5	7.5	160 ± 0.5	160 ± 0.5	M5
MR-J4-11K_/MR-J4-15K_	12	12	380 ± 0.5	10	196 ± 0.5	196 ± 0.5	M5
MR-J4-22K_	12	12	376 ± 0.5	12	236 ± 0.5	236 ± 0.5	M10
MR-J4W2-22B/MR-J4W2-44B	6	6	156 ± 0.5	6			M5
MR-J4W2-77B/MR-J4W2-1010B	6	6	156 ± 0.5	6	73 ± 0.3		M5
MR-J4W3-222B/MR-J4W3-444B	6	6	156 ± 0.5	6	73 ± 0.3		M5
MR-J4-60_4/MR-J4-100_4	12	12	156 ± 0.5	6	42 ± 0.3		M5
MR-J4-200_4	6	45	156 ± 0.5	6	78 ± 0.3		M5
MR-J4-350_4	6	6	235 ± 0.5	7.5	93 ± 0.5	93 ± 0.5	M5
MR-J4-500_4	6	6	235 ± 0.5	7.5	118 ± 0.5	118 ± 0.5	M5
MR-J4-700_4	6	6	285 ± 0.5	7.5	160 ± 0.5	160 ± 0.5	M5
MR-J4-11K_4/MR-J4-15K_4	12	12	380 ± 0.5	10	196 ± 0.5	196 ± 0.5	M5
MR-J4-22K_4	12	12	376 ± 0.5	12	236 ± 0.5	236 ± 0.5	M10

App. 4.9 Check list for user documentation

MITSUBISHI ELECTRIC

MR-J4 installation checklist for manufacturer/installer

The following items must be satisfied by the initial test operation at least. The manufacturer/installer must be responsible for checking the standards in the items.
Maintain and keep this checklist with related documents of machines to use this for periodic inspection.

1. Is it based on directive/standard applied to the machine? Yes [ ], No [ ]
2. Is directive/standard contained in Declaration of Conformity (DoC)? Yes [ ], No [ ]
3. Does the protection instrument conform to the category required? Yes [ ], No [ ]
4. Are electric shock protective measures (protection class) effective? Yes [ ], No [ ]
5. Is the STO function checked (test of all the shut-off wiring)? Yes [ ], No [ ]

Checking the items will not be instead of the first test operation or periodic inspection by professional engineers.

App. 5 MR-J3-D05 Safety logic unit

App. 5.1 Contents of the package

Open packing, and confirm the content of packing.

Contents	Quantity
MR-J3-D05 Safety logic unit	1
Connector for CN9 1-1871940-4 (TE Connectivity)	1
Connector for CN10 1-1871940-8 (TE Connectivity)	1
MR-J3-D05 Safety Logic Unit Installation Guide	1

App. 5.2 Terms related to safety

App. 5.2.1 Stop function for IEC/EN 61800-5-2

(1) STO function (Refer to IEC/EN 61800-5-2: 2007 4.2.2.2 STO.)
This function is integrated into the MR-J4 series servo amplifiers.
The STO function shuts down energy to servo motors, thus removing torque. This function electronically cuts off power supply in servo amplifiers for MR-J4 series servo amplifiers.
The purpose of this function is as follows.

1) Uncontrolled stop according to stop category 0 of IEC/EN 60204-1

2) Preventing unexpected start-up

(2) SS1 function (Refer to IEC/EN 61800-5-2: 2007 4.2.2.3C Safe stop 1 temporal delay.)
SS1 is a function which initiates the STO function when the previously set delay time has passed after the servo motor starts decelerating. The delay time can be set with MR-J3-D05.
The purpose of this function is as follows. This function is available by using an MR-J4 series servo amplifier with MR-J3-D05.

・Controlled stop according to stop category 1 of IEC/EN 60204-1

App. 5.2.2 Emergency operation for IEC/EN 60204-1

(1) Emergency stop (Refer to IEC/EN 60204-1: 2005 9.2.5.4.2 Emergency Stop.)
Emergency stop must override all other functions and actuation in all operation modes. Power to the machine driving part which may cause a hazardous state must be either removed immediately (stop category 0) or must be controlled to stop such hazardous state as soon as possible (stop category 1).
Restart must not be allowed even after the cause of the emergency state has been removed.

(2) Emergency switching off (Refer to IEC/EN 60204-1: 2005 9.2.5.4.3 Emergency Switching OFF.)
Removal of input power to driving device to remove electrical risk and to meet above mentioned safety standards.

App. 5.3 Cautions

The following basic safety notes must be read carefully and fully in order to prevent injury to persons or damage to property.
Only qualified personnel are authorized to install, start-up, repair or service the machines in which these components are installed.
They must be familiar with all applicable local safety regulations and laws in which machines with these components are installed, particularly the standards and guidelines mentioned in this Instruction Manual and the requirements mentioned in ISO/EN ISO 13849-1, IEC 61508, IEC/EN 61800-5-2, and IEC/EN 60204-1.
The staff responsible for this work must be given express permission from the company to perform start-up, programming, configuration, and maintenance of the machine in accordance with the safety standards.

⚠WARNING	●Improper installation of the safety related components or systems may cause improper operation in which safety is not assured, and may result in severe injuries or even death.

Protective Measures

- As described in IEC/EN 61800-5-2, the Safe Torque Off (STO) function only prevents the servo amplifier from supplying energy to the servo motor. Therefore, if an external force acts upon the drive axis, additional safety measures, such as brakes or counter-weights must be used.

App. 5.4 Residual risk

Machine manufacturers are responsible for all risk evaluations and all associated residual risks. Below are residual risks associated with the STO/EMG function. Mitsubishi is not liable for any damages or injuries caused by the residual risks.

(1) The SS1 function only guarantees the delay time before STO/EMG is engaged. Proper setting of this delay time is the full responsibility of the company and/or individuals responsible for installation and commissioning of the safety related system. The system, as a whole, must pass safety standards certification.

(2) When the SS1 delay time is shorter than the required servo motor deceleration time, if the forced stop function is malfunctioning, or if STO/EMG is engaged while the servo motor is still rotating; the servo motor will stop with the dynamic brake or freewheeling.

(3) For proper installation, wiring, and adjustment, thoroughly read the manual of each individual safety related component.

(4) Be sure that all safety related switches, relays, sensors, etc., meet the required safety standards.
The Mitsubishi Electric safety related components mentioned in this manual are certified by Certification Body as meeting the requirements of ISO/EN ISO 13849-1 Category 3, PL d and IEC 61508 SIL 2.

(5) Safety is not assured until safety-related components of the system are completely installed or adjusted.

(6) When replacing a servo amplifier etc. or MR-J3-D05, confirm that the new equipment is exactly the same as those being replaced. Once installed, be sure to verify the performance of the functions before commissioning the system.

(7) Perform all risk assessments and safety level certification to the machine or the system as a whole. It is recommended that a Certification Body final safety certification of the system be used.

(8) To prevent accumulation of multiple malfunctions, perform a malfunction check at regular intervals as deemed necessary by the applicable safety standard. Regardless of the system safety level, malfunction checks should be performed at least once per year.

(9) If the upper and lower power module in the servo amplifier are shorted and damaged simultaneously, the servo motor may make a half revolution at a maximum. For a linear servo motor, the primary side will move a distance of pole pitch.

App. 5.5 Block diagram and timing chart

(1) Function block diagram

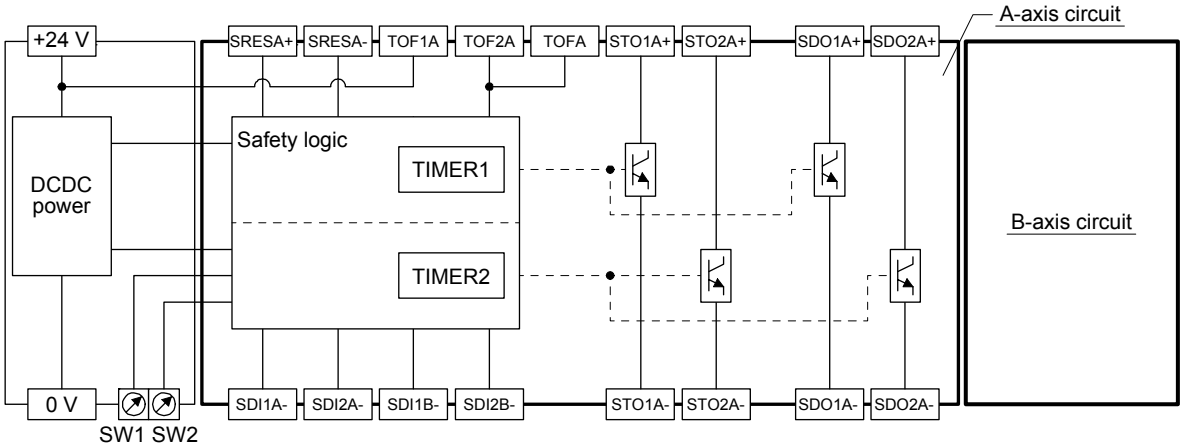

(2) Operation sequence

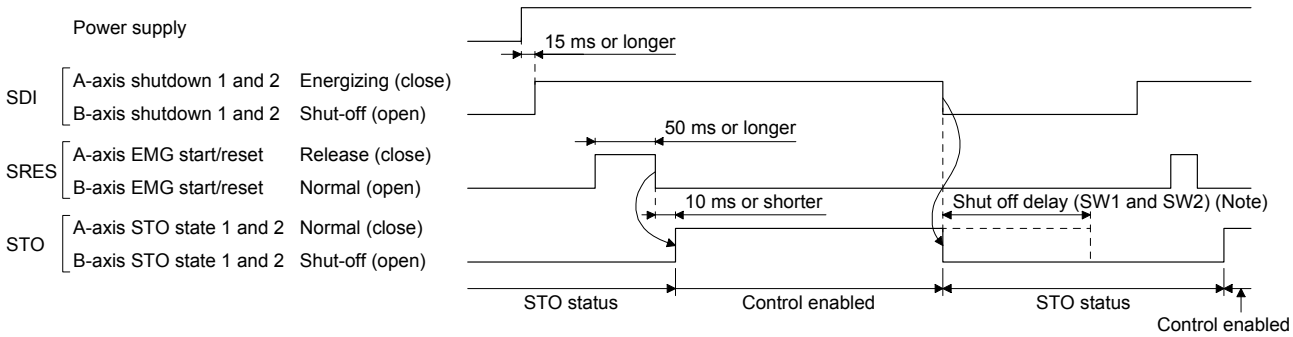

Note. Refer to App. 5.10.

App. 5.6 Maintenance and disposal

MR-J3-D05 is equipped with LED displays to check errors for maintenance.
Please dispose this unit according to your local laws and regulations.

App. 5.7 Functions and configuration

App. 5.7.1 Summary

MR-J3-D05 has two systems in which the each system has SS1 function (delay time) and output of STO function.

App. 5.7.2 Specifications

Safety logic unit model		MR-J3-D05
Control circuit power supply	Voltage	24 V DC
	Permissible voltage fluctuation	24 V DC ± 10%
	Power supply capacity [A]	0.5 (Note 1, 2)
Compatible system		2 systems (A-axis, B-axis independent)
Shut-off input		4 points (2 point × 2 systems) SDI_: (source/sink compatible) (Note 3)
Shut-off release input		2 points (1 point × 2 systems) SRES_: (source/sink compatible) (Note 3)
Feedback input		2 points (1 point × 2 systems) TOF_: (source compatible) (Note 3)
Input type		Photocoupler insulation, 24 V DC (external supply), internal limited resistance 5.4 kΩ
Shut-off output		8 points (4 point × 2 systems) STO_: (source compatible) (Note 3) SDO_: (source/sink compatible) (Note 3)
Output method		Photocoupler insulation, open-collector type Permissible current: 40 mA/1 output, Inrush current: 100 mA/1 output
Delay time setting		A-axis: Select from 0 s, 1.4 s, 2.8 s, 5.6 s, 9.8 s, or 30.8 s. B-axis: Select from 0 s, 1.4 s, 2.8 s, 9.8 s, or 30.8 s. Accuracy: ±2%
Functional safety		STO, SS1 (IEC/EN 61800-5-2) EMG STOP, EMG OFF IEC/EN 60204-1)
Safety performance	Standards certified by CB	EN ISO 13849-1 category 3 PL d, IEC 61508 SIL 2, EN 62061 SIL CL 2, and EN 61800-5-2 SIL 2
	Response performance (when delay time is set to 0 s) (Note 4)	10 ms or less (STO input off → shut-off output off)
	Mean time to dangerous failure (MTTFd)	516 years
	Diagnosis converge (DC avg)	93.1%
	Average probability of dangerous failures per hour (PFH)	4.75×10^{-9} [1/h]
Compliance to standards	CE marking	LVD: EN 61800-5-1 EMC: EN 61800-3 MD: EN ISO 13849-1, EN 61800-5-2, EN 62061
Structure		Natural-cooling, open (IP rating: IP 00)
Environment	Ambient temperature	0 °C to 55 °C (non-freezing), storage: -20 °C to 65 °C (non-freezing)
	Ambient humidity	90 %RH or less (non-condensing), storage: 90 %RH or less (non-condensing)
	Ambience	Indoors (no direct sunlight), free from corrosive gas, flammable gas, oil mist, dust, and dirt
	Altitude	Max. 1000 m above sea level
	Vibration resistance	5.9 m/s^2 at 10 Hz to 55 Hz (directions of X, Y and Z axes)
Mass [kg]		0.2 (including CN9 and CN10 connectors)

Note 1. Inrush current of approximately 1.5 A flows instantaneously when turning the control circuit power supply on. Select an appropriate capacity of power supply considering the inrush current.
2. Power-on duration of the safety logic unit is 100,000 times.
3. _: in signal name indicates a number or axis name.
4. For the test pulse input, contact your local sales office.

App. 5.7.3 When using MR-J3-D05 with an MR-J4 series servo amplifier

(1) System configuration diagram

The following shows the connection targets of the STO switch and STO release switch.

POINT
●MR-D05UDL_M (STO cable) for MR-J3 series cannot be used.

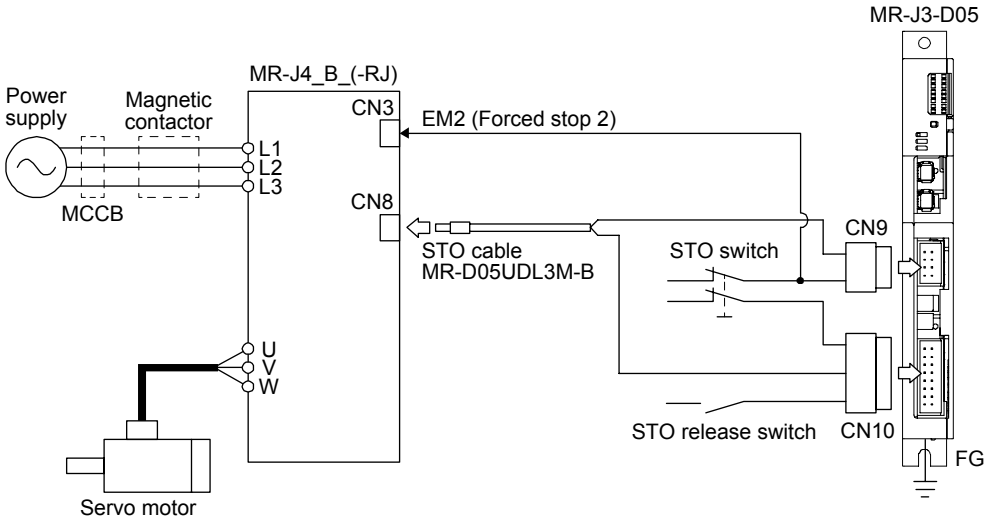

(2) Connection example

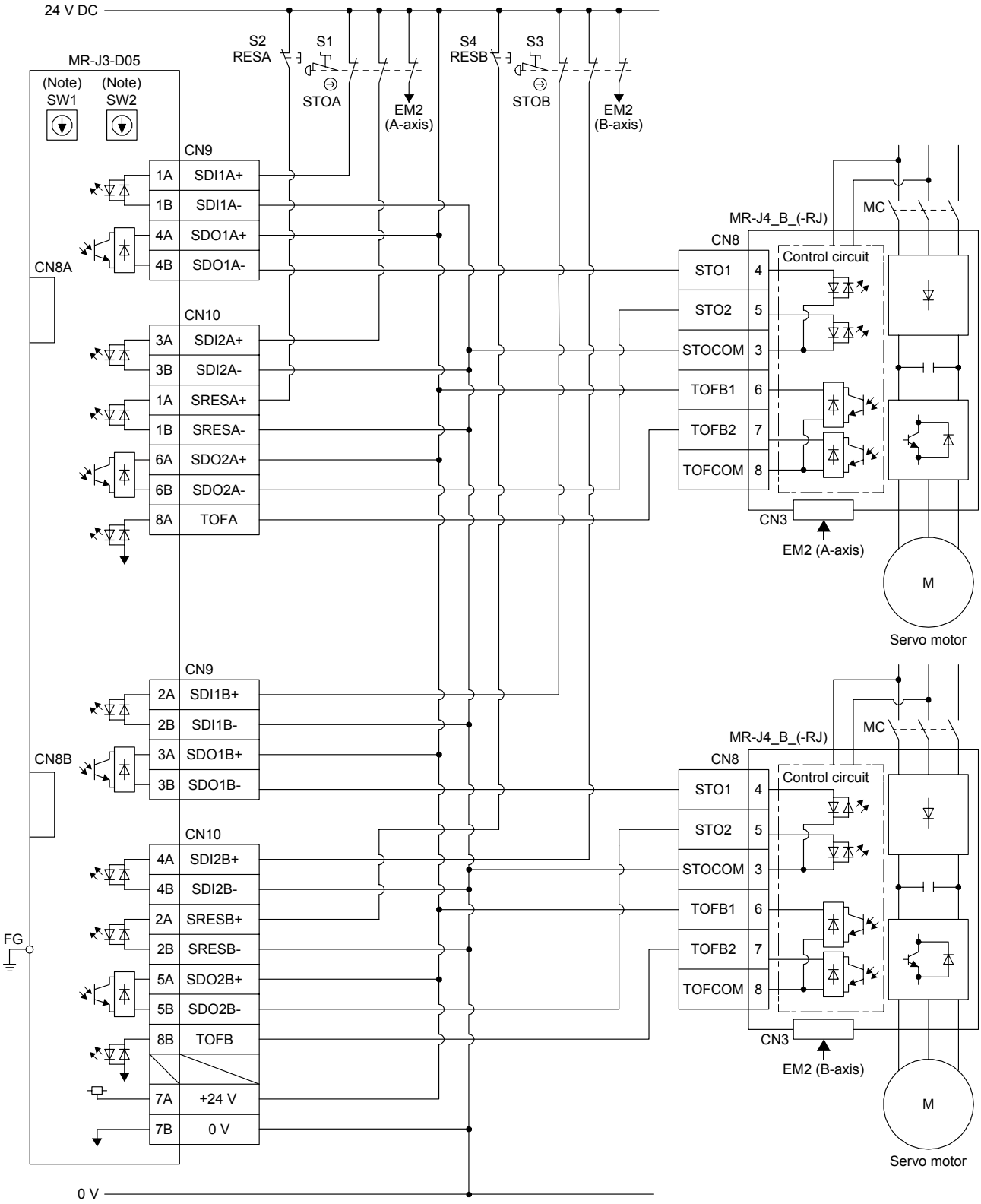

Note. Set the delay time of STO output with SW1 and SW2. These switches are located where dented from the front panel.

App. 5.8 Signal

App. 5.8.1 Connector/pin assignment

(1) CN8A

Device	Symbol	Pin No.	Function/application	I/O division
A-axis STO1	STO1A- STO1A+	1 4	Outputs STO1 to A-axis driving device. Outputs the same signal as A-axis STO2. STO state (base shutdown): Between STO1A+ and STO1A- is opened. STO release state (in driving): Between STO1A+ and STO1A- is closed.	O
A-axis STO2	STO2A- STO2A+	5 6	Outputs STO2 to A-axis driving device. Outputs the same signal as A-axis STO1. STO state (base shutdown): Between STO2A+ and STO2A- is opened. STO release state (in driving): Between STO2A+ and STO2A- is closed.	O
A-axis STO state	TOF2A TOF1A	7 8	Inputs STO state of A-axis driving device. STO state (base shutdown): Open between TOF2A and TOF1A. STO release state (in driving): Close between TOF2A and TOF1A.	I

(2) CN8B

Device	Symbol	Pin No.	Function/application	I/O division
B-axis STO1	STO1B- STO1B+	1 4	Outputs STO1 to B-axis driving device. Outputs the same signal as B-axis STO2. STO state (base shutdown): Between STO1B+ and STO1B- is opened. STO release state (in driving): Between STO1B+ and STO1B- is closed.	O
B-axis STO2	STO2B- STO2B+	5 6	Outputs STO2 to B-axis driving device. Outputs the same signal as B-axis STO1. STO state (base shutdown): Between STO2B+ and STO2B- is opened. STO release state (in driving): Between STO2B+ and STO2B- is closed.	O
B-axis STO state	TOF2B TOF1B	7 8	Inputs STO state of B-axis driving device. STO state (base shutdown): Open between TOF2B and TOF1B. STO release state (in driving): Close between TOF2B and TOF1B.	I

(3) CN9

Device	Symbol	Pin No.	Function/application	I/O division
A-axis shutdown 1	SDI1A+ SDI1A-	1A 1B	Connect this device to a safety switch for A-axis driving device. Input the same signal as A-axis shutdown 2. STO state (base shutdown): Open between SDI1A+ and SDI1A-. STO release state (in driving): Close between SDI1A+ and SDI1A-.	DI-1
B-axis shutdown 1	SDI1B+ SDI1B-	2A 2B	Connect this device to a safety switch for B-axis driving device. Input the same signal as B-axis shutdown 2. STO state (base shutdown): Open between SDI1B+ and SDI1B-. STO release state (in driving): Close between SDI1B+ and SDI1B-.	DI-1
A-axis SDO1	SDO1A+ SDO1A-	4A 4B	Outputs STO1 to A-axis driving device. Outputs the same signal as A-axis SDO2. STO state (base shutdown): Between SDO1A+ and SDO1A- is opened. STO release state (in driving): Between SDO1A+ and SDO1A- is closed.	DO-1
B-axis SDO1	SDO1B+ SDO1B-	3A 3B	Outputs STO1 to B-axis driving device. Outputs the same signal as B-axis SDO2. STO state (base shutdown): Between SDO1B+ and SDO1B- is opened. STO release state (in driving): Between SDO1B+ and SDO1B- is closed.	DO-1

(4) CN10

Device	Symbol	Pin No.	Function/application	I/O division
A-axis shutdown 2	SDI2A+ SDI2A-	3A 3B	Connect this device to a safety switch for A-axis driving device. Input the same signal as A-axis shutdown 1. STO state (base shutdown): Open between SDI2A+ and SDI2A-. STO release state (in driving): Close between SDI2A+ and SDI2A-.	DI-1
B-axis shutdown 2	SDI2B+ SDI2B-	4A 4B	Connect this device to a safety switch for B-axis driving device. Input the same signal as B-axis shutdown 1. STO state (base shutdown): Open between SDI2B+ and SDI2B-. STO release state (in driving): Close between SDI2B+ and SDI2B-.	DI-1
A-axis EMG start/reset	SRESA+ SRESA-	1A 1B	Signal for releasing STO state (base shutdown) on A-axis driving device. Releases STO state (base shutdown) on A-axis driving device by switching between SRESA+ and SRESA- from on (connected) to off (opened).	DI-1
B-axis EMG start/reset	SRESB+ SRESB-	2A 2B	Signal for releasing STO state (base shutdown) on B-axis driving device. Releases STO state (base shutdown) on B-axis driving device by switching between SRESB+ and SRESB- from on (connected) to off (opened).	DI-1
A-axis SDO2	SDO2A+ SDO2A-	6A 6B	Outputs STO2 to A-axis driving device. Outputs the same signal as A-axis STO1. STO state (base shutdown): Between SDO2A+ and SDO2A- is opened. STO release state (in driving): Between SDO2A+ and SDO2A- is closed.	DO-1
B-axis SDO2	SDO2B+ SDO2B-	5A 5B	Outputs STO2 to B-axis driving device. Outputs the same signal as B-axis SDO1. STO state (base shutdown): Between SDO2B+ and SDO2B- is opened. STO release state (in driving): Between SDO2B+ and SDO2B- is closed.	DO-1
Control circuit power supply	+24V	7A	Connect + side of 24 V DC.	
Control circuit power GND	0V	7B	Connect - side of 24 V DC.	
A-axis STO state	TOFA	8A	TOFA is internally connected with TOF2A.	
B-axis STO state	TOFB	8B	TOFB is internally connected with TOF2B.	

App. 5.8.2 Interfaces

In this servo amplifier, source type I/O interfaces can be used.

(1) Sink I/O interface (CN9, CN10 connector)

(a) Digital input interface DI-1

This is an input circuit whose photocoupler cathode side is input terminal. Transmit signals from sink (open-collector) type transistor output, relay switch, etc.

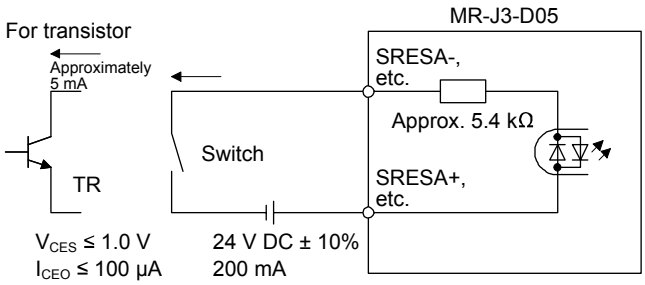

(b) Digital output interface DO-1

This is a circuit of collector output terminal of the output transistor. When the output transistor is turned on, collector terminal current will be applied for the output. A lamp, relay or photocoupler can be driven. Install a diode (D) for an inductive load, or install an inrush current suppressing resistor (R) for a lamp load. (Rated current: 40 mA or less, maximum current: 50 mA or less, inrush current: 100 mA or less) A maximum of 2.6 V voltage drop occurs in the MR-J3-D05.

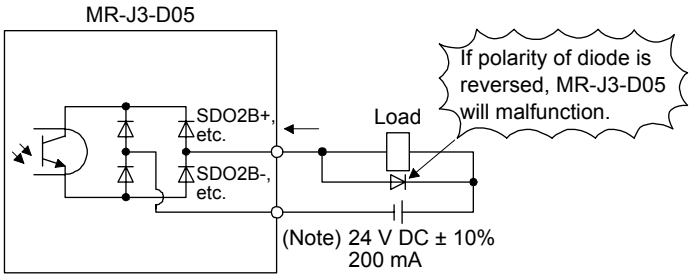

Note. If the voltage drop (maximum of 2.6 V) interferes with the relay operation, apply high voltage (maximum of 26.4 V) from external source.

(2) Source I/O interfaces (CN9, CN10 connector)

(a) Digital input interface DI-1

This is an input circuit whose photocoupler anode side is input terminal. Transmit signals from source (open-collector) type transistor output, relay switch, etc.

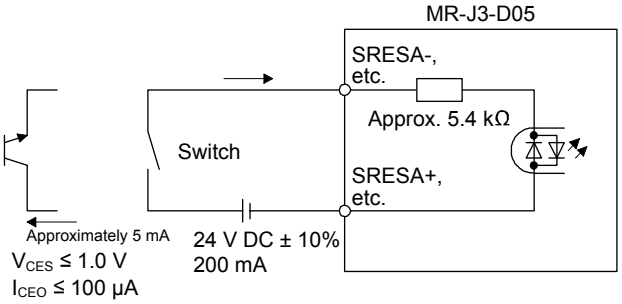

(b) Digital output interface DO-1

This is a circuit of emitter output terminal of the output transistor. When the output transistor is turned on, current will be applied from the output to a load. A maximum of 2.6 V voltage drop occurs in the MR-J3-D05.

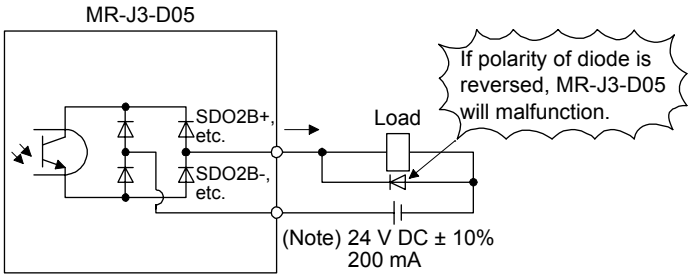

Note. If the voltage drop (maximum of 2.6 V) interferes with the relay operation, apply high voltage (maximum of 26.4 V) from external source.

App. 5.8.3 Wiring CN9 and CN10 connectors

Handle with the tool with care when connecting wires.

(1) Wire strip

(a) Use wires with size of AWG 24 to 20 (0.22 mm^2 to 0.5 mm^2) (recommended electric wire: UL1007) and strip the wires to make the stripped length 7.0 mm ± 0.3 mm. Confirm the stripped length with gauge, etc. before using the wires.

(b) If the stripped wires are bent, feazed or too thick due to twisting too much, fix the wires by twisting lightly, etc. Then, confirm the stripped length before using the wires. Do not use excessively deformed wires.

(c) Smooth out the wire surface and stripped insulator surface.

(2) Connecting wires

Before connecting wires, be sure to pull out the receptacle assembly from the header connector. If wires are connected with inserted connector, the connector and the printed board may malfunction.

(a) Using extraction tool (1891348-1 or 2040798-1)

1) Dimensions and mass

[Unit: mm]

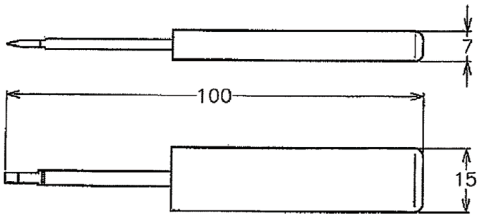

Mass : Approx. 20 g

2) Connecting wires

a) Confirm the model number of the housing, contact and tool to be used.

b) Insert the tool diagonally into the receptacle assembly.

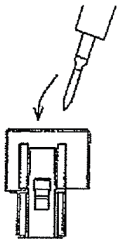

c) Insert the tool until it hits the surface of the receptacle assembly. At this stage, the tool is vertical to the receptacle assembly.

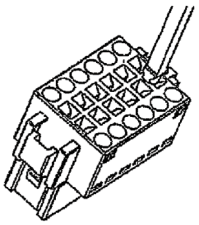

d) Insert wires in the wiring hole till the end. The wires should be slightly twisted in advance to prevent it from being feazed.

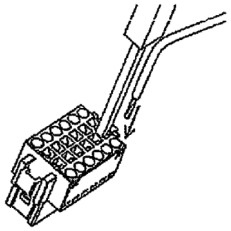

It is easy to insert the wire if the wire is inserted diagonally while twisting the tool.

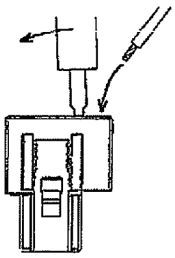

e) Remove the tool.

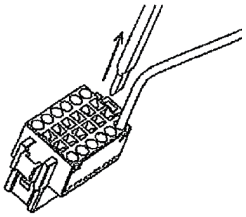

(b) Using a screwdriver

To avoid damaging housings and springs when wiring with screwdriver, do not put excessive force. Be cautious when connecting.

1) Adjusting screw driver

Diameter: 2.3 mm ± 0.05 mm
Length: 120 mm or less
Width: 2.3 mm
Thickness: 0.25 mm
Angle in tip of the blade: 18 ± 1 degrees

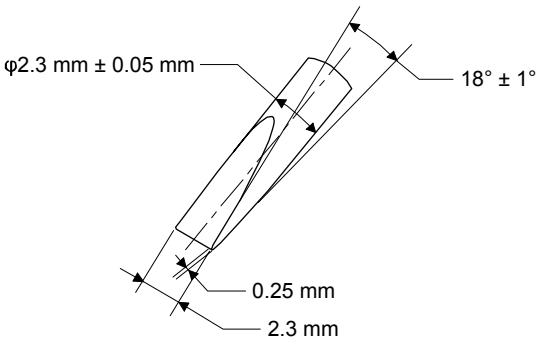

Screwdriver diameter: φ 2.3 mm

Diameter: 2.5 mm ± 0.05 mm
Length: 120 mm or less
Width: 2.5 mm
Thickness: 0.3 mm
Angle in tip of the blade: 12 ± 1 degrees

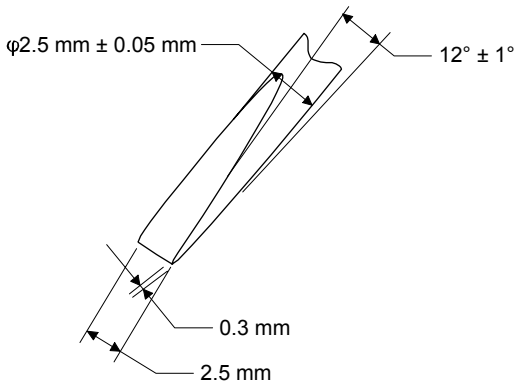

Screwdriver diameter: φ 2.5 mm

2) Connecting wires

a) Insert a screwdriver in the front slot a little diagonally, and depress the spring. While depressing the spring, insert the wires until they hit the end. Note that the housing and spring may be damaged if the screwdriver is inserted strongly. Never insert the screwdriver in the wire hole. Otherwise, the connector will be damaged.

b) Pull the screwdriver out while pressing the wires. Connecting wires is completed.

c) Pull the wire lightly to confirm that the wire is surely connected.

d) To remove the wires, depress the spring by the screwdriver in the same way as connecting wires, and then pull the wires out.

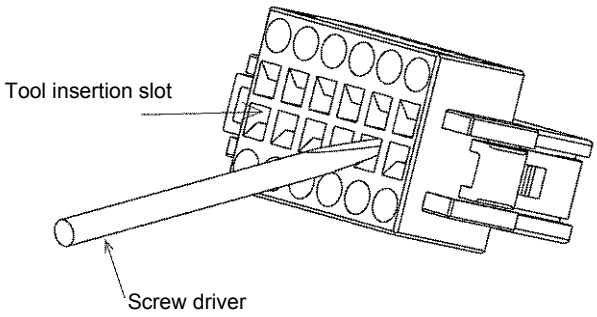

(3) Connector insertion

Insert the connector all the way straight until you hear or feel clicking. When removing the connector, depress the lock part completely before pulling out. If the connector is pulled out without depressing the lock part completely, the housing, contact and/or wires may be damaged.

(4) Compatible wire

Compatible wire size is listed below.

Wire size	
mm^2	AWG
0.22	24
0.34	22
0.50	20

(5) Others

(a) Fix a wire tie at least distance of "A" × 1.5 away from the end of the connector.

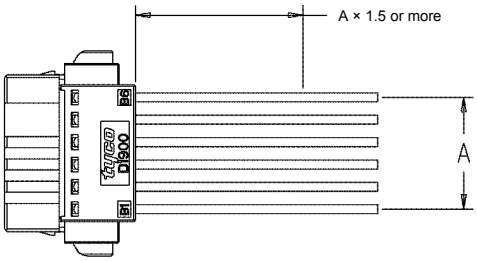

(b) Be sure that wires are not pulled excessively when the connector is inserted.

App. 5.8.4 Wiring FG

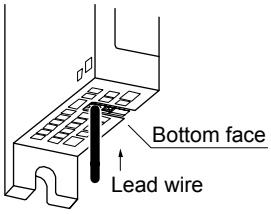

Wire range

Single wire: φ 0.4 mm to 1.2 mm (AWG 26 to AWG 16)

Stranded wire: 0.2 mm^2 to 1.25 mm^2 (AWG 24 to AWG 16), wire φ 0.18 mm or more

App. 5.9 LED display

I/O status, malfunction and power on/off are displayed with LED for each A-axis and B-axis.

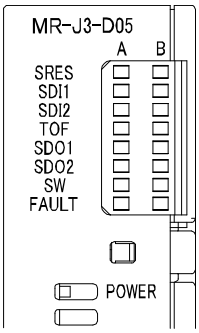

LED	Definition	LED	
		Column A	Column B
SRES	Monitor LED for start/reset Off: The start/reset is off. (The switch contact is opened.) On: The start/reset is on. (The switch contact is closed.)	A-axis	B-axis
SDI1	Monitor LED for shut-off 1 Off: The shut-off 1 is off. (The switch contact is closed.) On: The shut-off 1 is on. (The switch contact is opened.)		
SDI2	Monitor LED for shut-off 2 Off: The shut-off 2 is off. (The switch contact is closed.) On: The shut-off 2 is on. (The switch contact is opened.)		
TOF	Monitor LED for STO state Off: Not in STO state On: In STO state		
SDO1	Monitor LED for SDO1 Off: Not in STO state On: In STO state		
SDO2	Monitor LED for SDO2 Off: Not in STO state On: In STO state		
SW	Monitor LED for confirming shutdown delay setting Off: The settings of SW1 and SW2 do not match. On: The settings of SW1 and SW2 match.		
FAULT	FAULT LED Off: Normal operation (STO monitoring state) On: Fault has occurred.		
POWER	Power Off: Power is not supplied to MR-J3-D05. On: Power is being supplied to MR-J3-D05.		

App. 5.10 Rotary switch setting

Rotary switch is used to shut off the power after control stop by SS1 function.
Set the delay time for STO output after STO shut off switch is pressed. Set same setting for SW1 and SW2, and set the rotary switch setting according to the delay time in the table below.
Setting cannot be changed while power is on. Notify users that setting cannot be changed by putting a seal or by another method so that end users will not change the setting after the shipment.
0 to F in the following table is the set value of the rotary switches (SW1 and SW2).

Rotary switch setting and delay time at A/B-axis [s]

		B-axis					
		0 s	1.4 s	2.8 s	5.6 s	9.8 s	30.8 s
A-axis	0 s	0	1	2	-	3	4
	1.4 s		-	5	-	6	7
	2.8 s			8	-	9	A
	5.6 s				-	B	C
	9.8 s					D	E
	30.8 s						F

App. 5.11 Troubleshooting

When power is not supplied or FAULT LED turns on, refer the following table and take the appropriate action.

Event	Definition	Cause	Action
Power is not supplied.	Power LED does not turn on although power is supplied.	1. 24 V DC power supply is malfunctioning.	Replace the 24 V DC power supply.
		2. Wires between MR-J3-D05 and 24 V DC power supply are disconnected or are in contact with other wires.	Check the wiring.
		3. MR-J3-D05 is malfunctioning.	Replace the MR-J3-D05.
FAULT LED is on.	FAULT LED of A-axis or B-axis is on, and will not turn off.	1. The delay time settings are not matched.	Check the settings of the rotary switch.
		2. Switch input error	Check the wiring or sequence of the input signals.
		3. TOF signal error	Check the connection with the servo amplifier.
		4. MR-J3-D05 is malfunctioning.	Replace the MR-J3-D05.

App. 5.12 Dimensions

[Unit: mm]

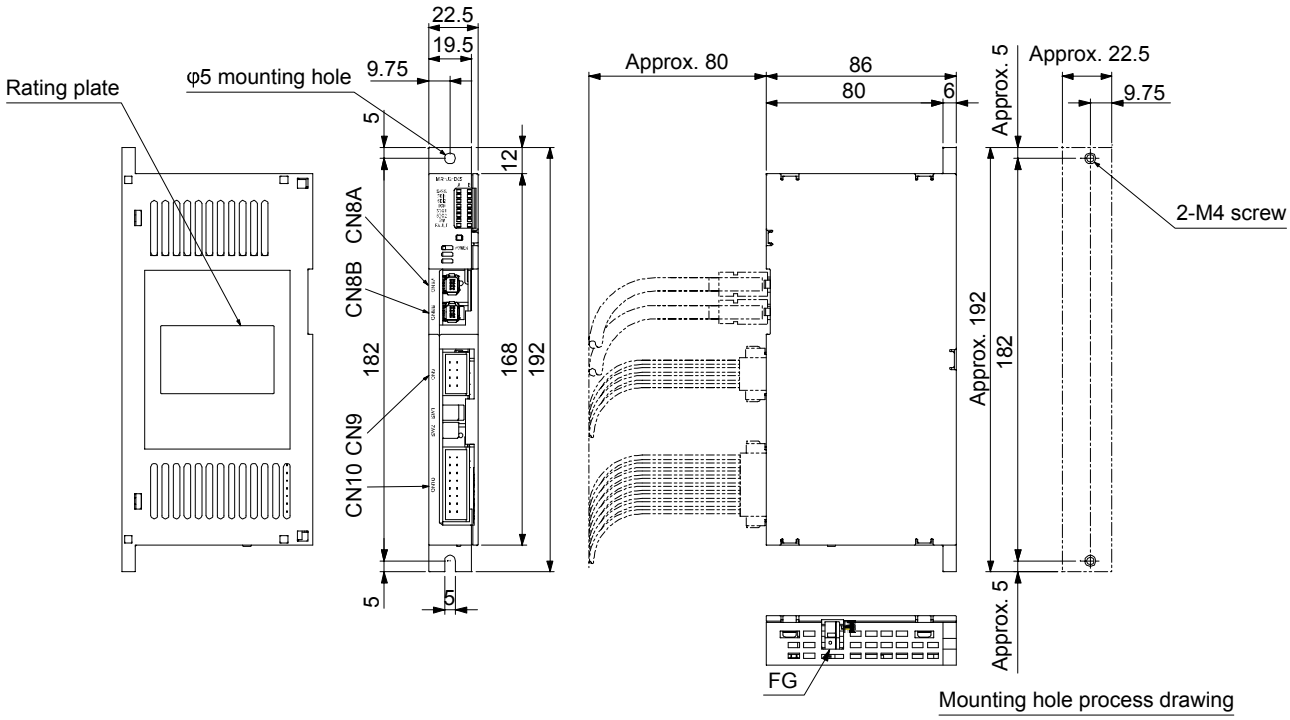

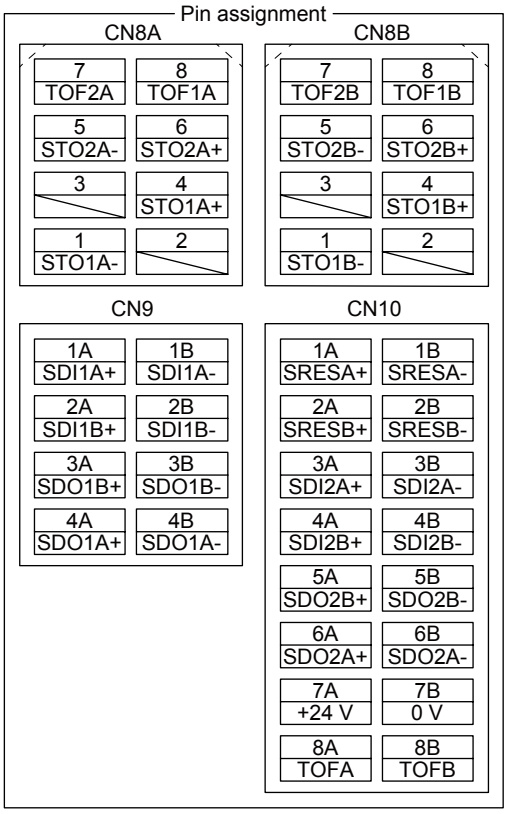

Mounting screw

Screw size: M4

Tightening torque: 1.2 N•m

Mass: 0.2 [kg]

App. 5.13 Installation

Follow the instructions in this section and install MR-J3-D05 in the specified direction. Leave clearances between MR-J3-D05 and other equipment including the cabinet.

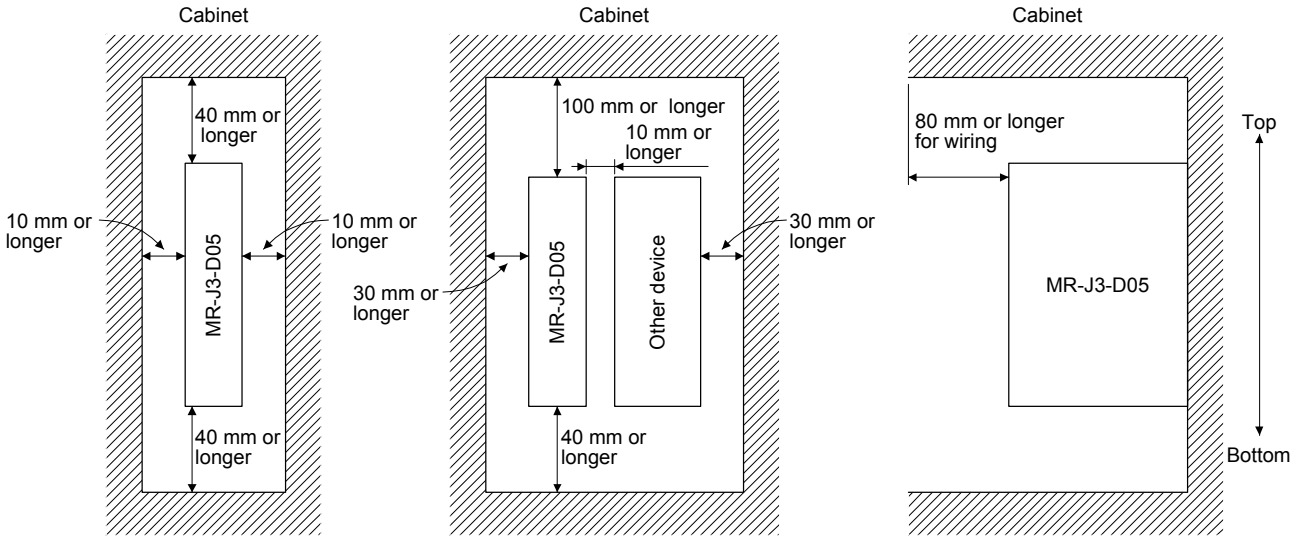

App. 5.14 Combinations of cable/connector

POINT
●MR-D05UDL_M (STO cable) for MR-J3 series cannot be used.

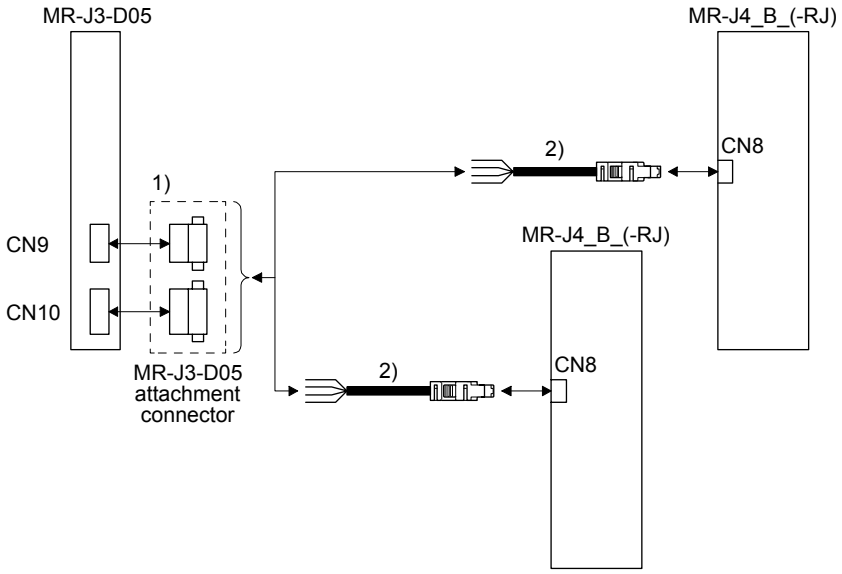

No.	Product	Model	Description
1)	Connector	MR-J3-D05 attachment connector	  Connector for CN9: 1-1871940-4 (TE Connectivity) Connector for CN10: 1-1871940-8 (TE Connectivity)
2)	STO cable	MR-D05UDL3M-B Cable length: 3 m	Connector set: 2069250-1 (TE Connectivity) 

COMPLIANCE WITH THE MACHINERY DIRECTIVES

The MR-J3-D05 complies with the safety components laid down in the directive 2006/42/EC (Machinery).

App. 6 EC declaration of conformity

The MR-J4 series servo amplifiers and MR-J3-D05 safety logic unit complies with the safety component laid down in the Machinery directive.

TÜVRheinland®

ZERTIFIKAT
CERTIFICATE

EC Type-Examination Certificate

Reg.-No.: 01/205/5196/12

Product tested	AC Servo Drive with integrated safety function "Safe Torque Off (STO"	**Certificate holder**	Mitsubishi Electric Corporation Nagoya Works 1-14 Yada-Minami 5-chome Higashi-ku Nagoya 461-8670 Japan
Type designation	MR-J4-*A* MR-J4-*B* MR-J4W2-*B* MR-J4W3-*B*	**Manufacturer**	see certificate holder
Codes and standards forming the basis of testing	EN 61800-5-2:2007 EN 61800-5-1:2007 (in extracts) EN 61800-3:2004 EN ISO 13849-1:2008 + AC:2009		EN 62061:2005 + AC:2010 EN 60204-1:2006 + A1:2009 + AC:2010 (in extracts) IEC 61508 Parts 1-7:2010
Intended application	The safety function "Safe Torque Off" complies with the requirements of the relevant standards (PL d acc. to EN ISO 13849-1, SIL CL 2 acc. to EN 61800-5-2/ EN 62061/ IEC 61508) and can be used in applications up to PL d acc. to EN ISO 13849-1 and SIL 2 acc. to EN 62061/ IEC 61508.		
Specific requirements	The instructions of the associated Installation and Operating Manual shall be considered.		
It is confirmed, that the product under test complies with the requirements for machines defined in Annex I of the EC Directive 2006/42/EC.			
This certificate is valid until 2017-02-28.			

TÜVRheinland® Functional Safety Type Approved FS

The test report-no.: 968/M 342.00/12 dated 2012-02-28 is an integral part of this certificate.

The holder of a valid licence certificate for the product tested is authorized to affix the test mark shown opposite to products, which are identical with the product tested.

TÜVRheinland 0035 Notified Body

Berlin, 2012-02-28

Certification Body for Machinery, NB 0035

Dipl.-Ing. Eberhard Frejno

TÜVRheinland®

ZERTIFIKAT
CERTIFICATE

Nr./No. 968/EL 612.00/09

Prüfgegenstand **Product tested**	Safety Logic Module for usage in combination with MR-J3-□S Servo Drives	**Inhaber** **Holder**	Mitsubishi Electric Corporation Nagoya Works 1-14 Yada-Minami 5-chome, Higashi-ku Nagoya 461-8670 Japan
Typbezeichnung **Type designation**	MR-J3-D05	**Verwendungs-zweck** **Intended application**	Drive Applications STO / SS1 acc. to EN 61800-5-2 Safe Stop / Safe Off Stop Category 0 / Stop Category 1 acc. to EN 60204-1
Prüfgrundlagen **Codes and standards forming the basis of testing**	EN ISO 13849-1:2008 EN 62061:2005 EN 61800-5-2:2007 EN 61800-5-1:2007	EN 61800-3:2004 EN 60204-1:2006 EN 50178:1997 EN 61508-1 to -7:2000-2002	
Prüfungsergebnis **Test results**	The MR-J3-D05 Safety Logic Module in combination with the MR-J3 series servo drives is suitable for the basic safety functions "STO" and "SS1" (Type C) according to EN 61800-5-2 as well as "Safe Stop" (Stop category 0 and Stop category 1) and "Safe Off" according to EN 60204-1. It can be used within safety related applications up to Safety Category 3 / PL d and SIL 2 / SIL CL 2 according to EN ISO 13849-1 and EN 62061.		
Besondere Bedingungen **Specific requirements**	For a safe usage of the product the instructions in the user documentation must be observed. For "Safe Off" two suitable additional magnetic contactors must be used additionally.		

Der Prüfbericht-Nr.: 968/EL 612.00/09 vom 21.04.2009 ist Bestandteil dieses Zertifikates.
Dieses Zertifikat ist nur gültig für Erzeugnisse, die mit dem Prüfgegenstand übereinstimmen. Es wird ungültig bei jeglicher Änderung der Prüfgrundlagen für den angegebenen Verwendungszweck.

The test report-no.: 968/EL 612.00/09 dated 2009-04-21 is an integral part of this certificate.
This certificate is valid only for products which are identical with the product tested. It becomes invalid at any change of the codes and standards forming the basis of testing for the intended application.

TÜV Rheinland Industrie Service GmbH
Geschäftsfeld ASI
Automation, Software und Informationstechnologie
Am Grauen Stein, 51105 Köln
Postfach 91 09 51, 51101 Köln

H. Gall

2009-04-21
Datum/Date

Firmenstempel/Company stamp

Dipl.-Ing. Heinz Gall

App. 7 How to replace servo amplifier without magnetic pole detection

⚠CAUTION	●Be sure to write the magnetic pole information of the servo amplifier before the replacement to the servo amplifier after the replacement. If the information before and after replacement are not the same, the servo motor may operate unexpectedly.

When replacing the servo amplifier, carry out the magnetic pole detection again. If the magnetic pole detection cannot be performed unavoidably, write the magnetic pole information from the servo amplifier before the replacement to the one after the replacement using MR Configurator2.

(1) Procedures

(a) Read the magnetic pole information of the servo amplifier before the replacement.

(b) Write the read magnetic pole information to the servo amplifier after the replacement.

(c) Perform the test operation with the torque limit for ensuring the safety, and confirm that there is no trouble.

(2) Migration method of the magnetic pole information

(a) How to read the magnetic pole information from the servo amplifier before the replacement

1) Open the project in MR Configurator2, select "MR-J4-B" for model, and select "Linear" for operation mode.

2) Check that the personal computer is connected with the servo amplifier, and select "Diagnosis" and then "Linear diagnosis".

3) Click the "Magnetic pole information" button (1) in figure) to open the magnetic pole information window.

4) Click "Read All" of the magnetic pole information window. (2) in figure)

5) Confirm the data 1 and data 2 (3) in figure) of the magnetic pole information window and take notes.

(b) How to write the magnetic pole information to the servo amplifier after the replacement

1) Open the project in MR Configurator2, select "MR-J4-B" for model, and select "Linear" for operation mode.

2) Check that the personal computer is connected with the servo amplifier, and select "Diagnosis" and then "Linear diagnosis".

3) Click the "Magnetic pole information" button (1) in figure) to open the magnetic pole information window.

4) Input the value of the magnetic pole information taken notes to the data 1 and data 2 (3) in figure) of the magnetic pole information window.

5) Click "Write All" (4) in figure) of the magnetic pole information window.

6) Cycle the power of the servo amplifier.

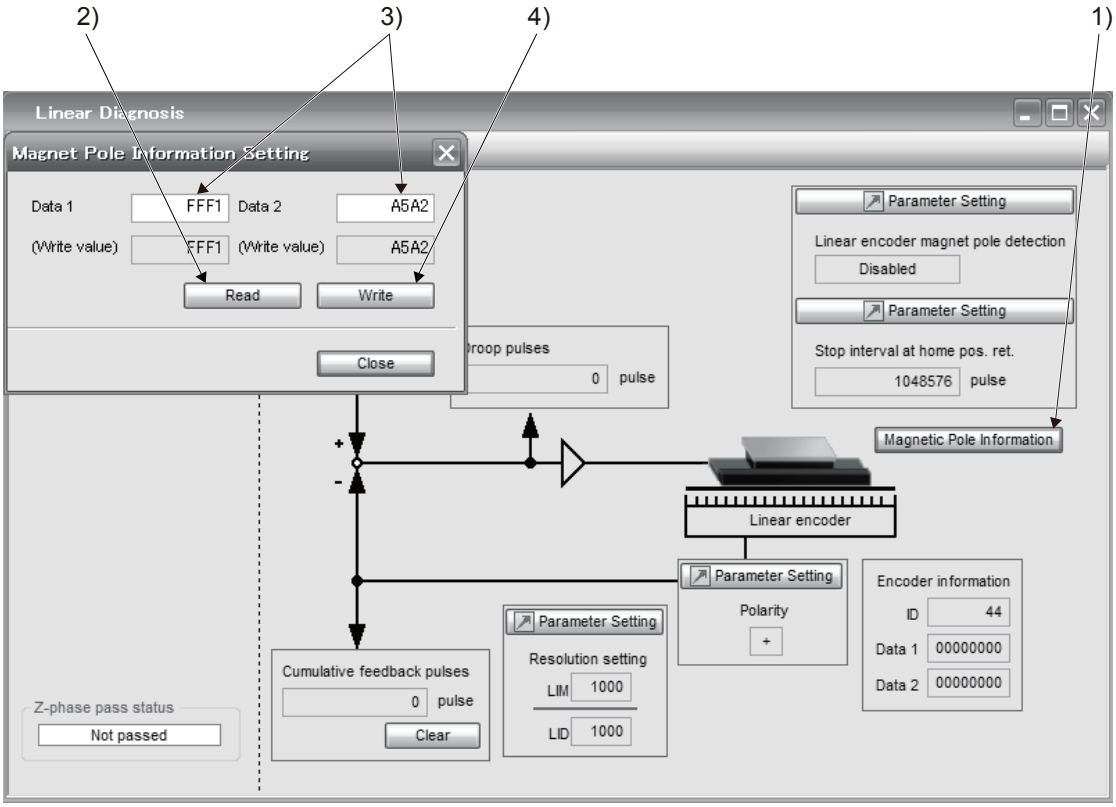

App. 8 Two-wire type encoder cable for HG-MR/HG-KR

Use a two-wire type encoder cable for the fully closed loop control by the MR-J4-_B_ servo amplifiers. For MR-EKCBL_M-_ encoder cables for HG-MR and HG-KR, up to 20 m cables are two-wire type. Therefore, when you need a longer encoder cable of two-wire type than 20 m, fabricate one using MR-ECNM connector set. Use the internal wiring diagram in the section to fabricate a cable up to 50 m.

App. 8.1 Configuration diagram

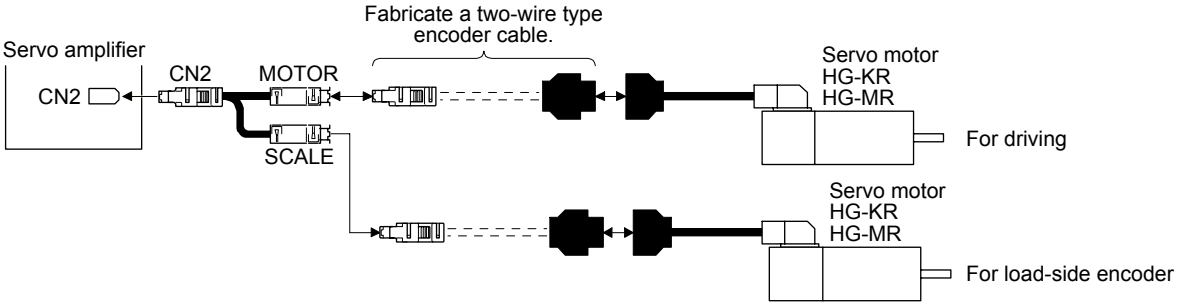

App. 8.2 Connector set

Connector set	1) Servo amplifier-side connector	2) Servo motor-side connector
MR-ECNM	Receptacle: 36210-0100PL Shell kit: 36310-3200-008 (3M) 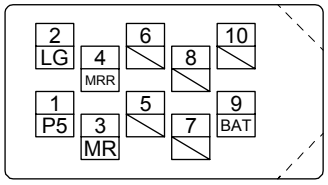 View seen from wiring side. (Note) or Connector set: 54599-1019 (Molex) 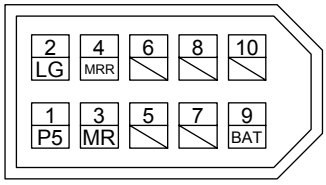 View seen from wiring side. (Note) Note. Keep open the pins shown with ▧. Especially, pin 10 is provided for manufacturer adjustment. If it is connected with any other pin, the servo amplifier cannot operate normally.	Housing: 1-172161-9 Connector pin: 170359-1 (TE Connectivity or equivalent) Cable clamp: MTI-0002 (Toa Electric Industrial) 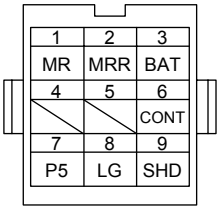 View seen from wiring side.

App. 8.3 Internal wiring diagram

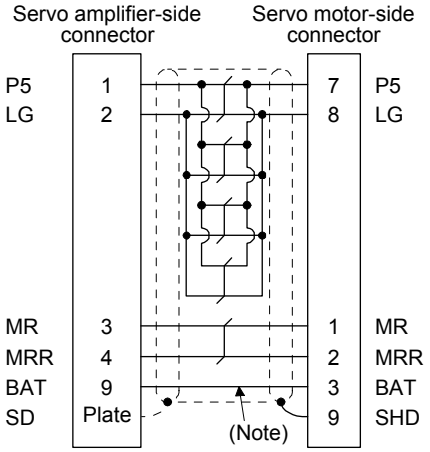

Note. Always make connection for use in an absolute position detection system. Wiring is not necessary for use in an incremental system.

App. 9 SSCNET III cable (SC-J3BUS_M-C) manufactured by Mitsubishi Electric System & Service

POINT

- For the details of the SSCNET III cables, contact your local sales office.
- Do not look directly at the light generated from CN1A/CN1B connector of servo amplifier or the end of SSCNET III cable. The light can be a discomfort when it enters the eye.

The cable is available per 1 m up to 100 m. The number of the length (1 to 100) will be in the underscore in the cable model.

Cable model	Cable length 1 m to 100 m	Bending life	Application/remark
SC-J3BUS_M-C	1 to 100	Ultra-long bending life	Using long distance cable

App. 10 Analog monitor

POINT

- A voltage of analog monitor output may be irregular at power-on.

The servo status can be output to two channels in terms of voltage.

(1) Setting

Change the following digits of [Pr. PC09] and [Pr. PC10].

[Pr. PC09]

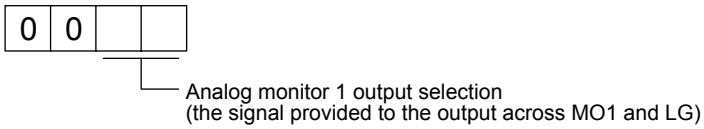

[Pr. PC10]

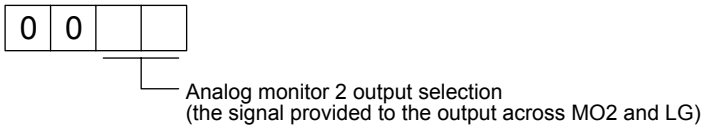

[Pr. PC11] and [Pr. PC12] can be used to set the offset voltages to the analog output voltages. Setting value is -999 mV to 999 mV.

Parameter	Description	Setting range [mV]
PC11	This is used to set the offset voltage of MO1 (Analog monitor 1).	-999 to 999
PC12	This is used to set the offset voltage of MO2 (Analog monitor 2).	

(2) Setting

POINT
●When you use a linear servo motor, replace the following left words to the right words. (servo motor) speed → (linear servo motor) speed CCW direction → Positive direction CW direction → Negaative direction Torque → Thrust

The servo amplifier is factory-set to output the servo motor speed to MO1 (Analog monitor 1) and the torque to MO2 (Analog monitor 2). The setting can be changed as listed below by setting the [Pr. PC09] and [Pr. PC10] value.
Refer to (3) for the detection point.

Setting value	Output item	Description	Setting value	Output item	Description
00	Servo motor speed/ Linear servo motor speed	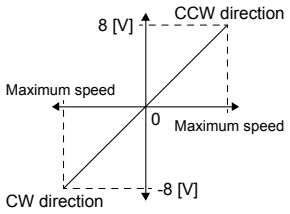	01	Torque/Thrust	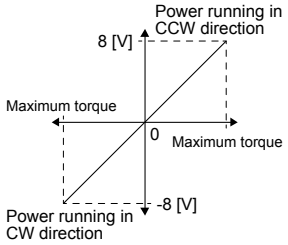
02	Servo motor speed/ Linear servo motor speed	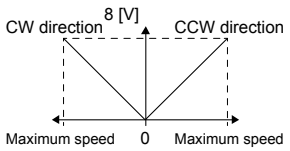	03	Torque/Thrust	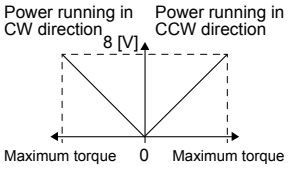
04	Current command	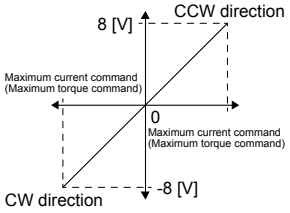	05	Speed command	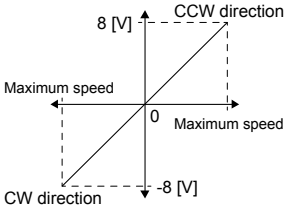
06	Servo motor-side droop pulses (Note 1, 3, 5, 6) (±10 V/100 pulses)	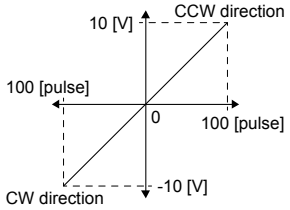	07	Servo motor-side droop pulses (Note 1, 3, 5, 6) (±10 V/1000 pulses)	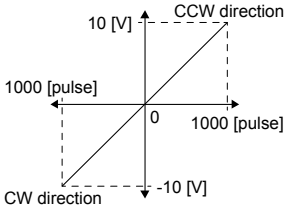
08	Servo motor-side droop pulses (Note 1, 3, 5, 6) (±10 V/10000 pulses)	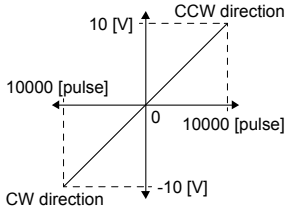	09	Servo motor-side droop pulses (Note 1, 3, 5, 6) (±10 V/100000 pulses)	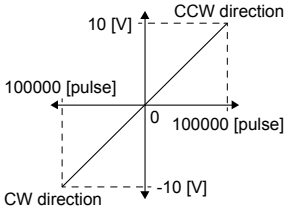

Setting value	Output item	Description	Setting value	Output item	Description
0A	Feedback position (Note 1, 2, 3) (±10 V/1 Mpulse)	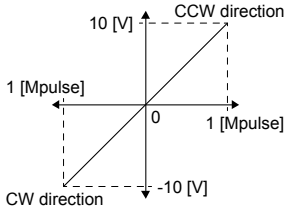	0B	Feedback position (Note 1, 2, 3) (±10 V/10 Mpulse)	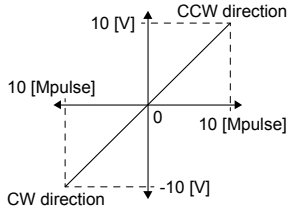
0C	Feedback position (Note 1, 2, 3) (±10 V/100 Mpulse)	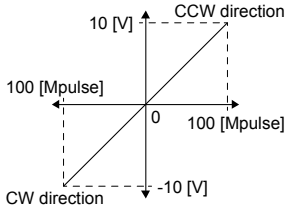	0D	Bus voltage (Note 7)	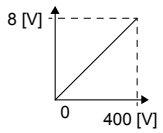
0E	Speed command 2 (Note 3)	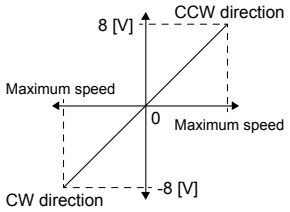	10	Load-side droop pulses (Note 3, 4, 5, 6) (±10 V/100 pulses)	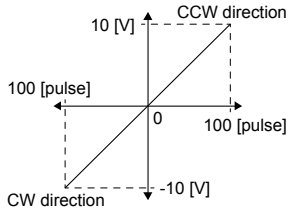
11	Load-side droop pulses (Note 3, 4, 5, 6) (±10 V/1000 pulses)	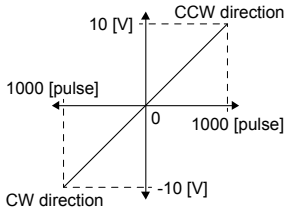	12	Load-side droop pulses (Note 3, 4, 5, 6) (±10 V/10000 pulses)	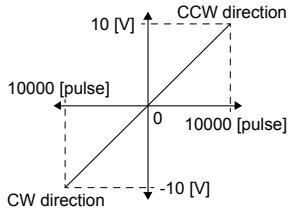
13	Load-side droop pulses (Note 3, 4, 5, 6) (±10 V/100000 pulses)	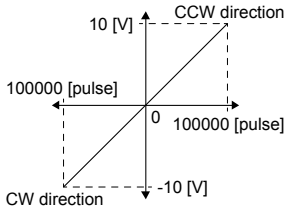	14	Load-side droop pulses (Note 3, 4, 5, 6) (±10 V/1 Mpulses)	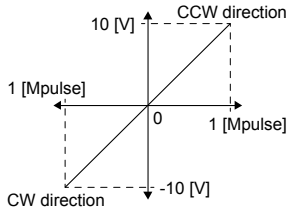
15	Motor-side/load-side position deviation (Note 3, 4, 5, 6) (±10 V/100000 pulses)	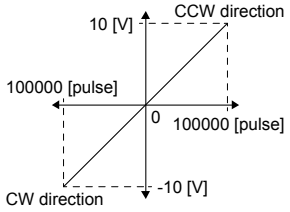	16	Servo motor-side/load-side speed deviation (Note 4)	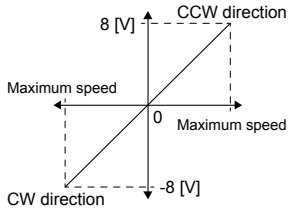
17	Encoder inside temperature (±10 V/±128 °C)	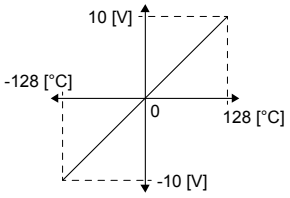			

Note 1. Encoder pulse unit.
2. Available in position control mode
3. This cannot be used in the torque control mode.
4. This can be used with MR Configurator2 with software version 1.19V or later.
5. This cannot be used in the speed control mode.
6. Output in the load-side encoder unit for the fully closed loop control. Output in the servo motor encoder unit for the semi closed loop control.
7. For 400 V class servo amplifier, the bus voltage becomes +8 V/800 V.

(3) Analog monitor block diagram

(a) Semi closed loop control

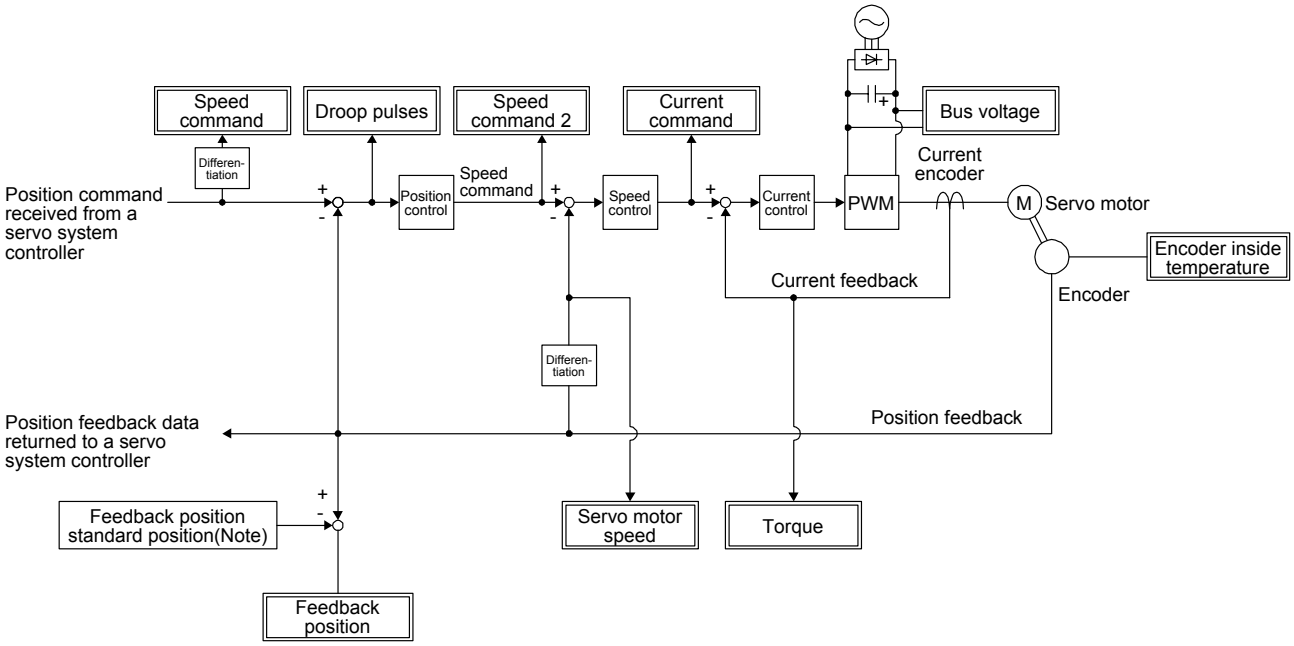

Note. The feedback position is output based on the position data passed between servo system controller and servo amplifier. [Pr. PC13] and [Pr. PC14] can set up the standard position of feedback position that is output to analog monitor in order to adjust the output range of feedback position. The setting range is between -9999 pulses and 9999 pulses.

Standard position of feedback position = [Pr. PC14] setting value × 10000 + [Pr. PC13] setting value

Parameter	Description	Setting range
PC13	Sets the lower-order four digits of the standard position of feedback position	-9999 to 9999 [pulse]
PC14	Sets the higher-order four digits of the standard position of feedback position	-9999 to 9999 [10000 pulses]

(b) Fully closed loop control

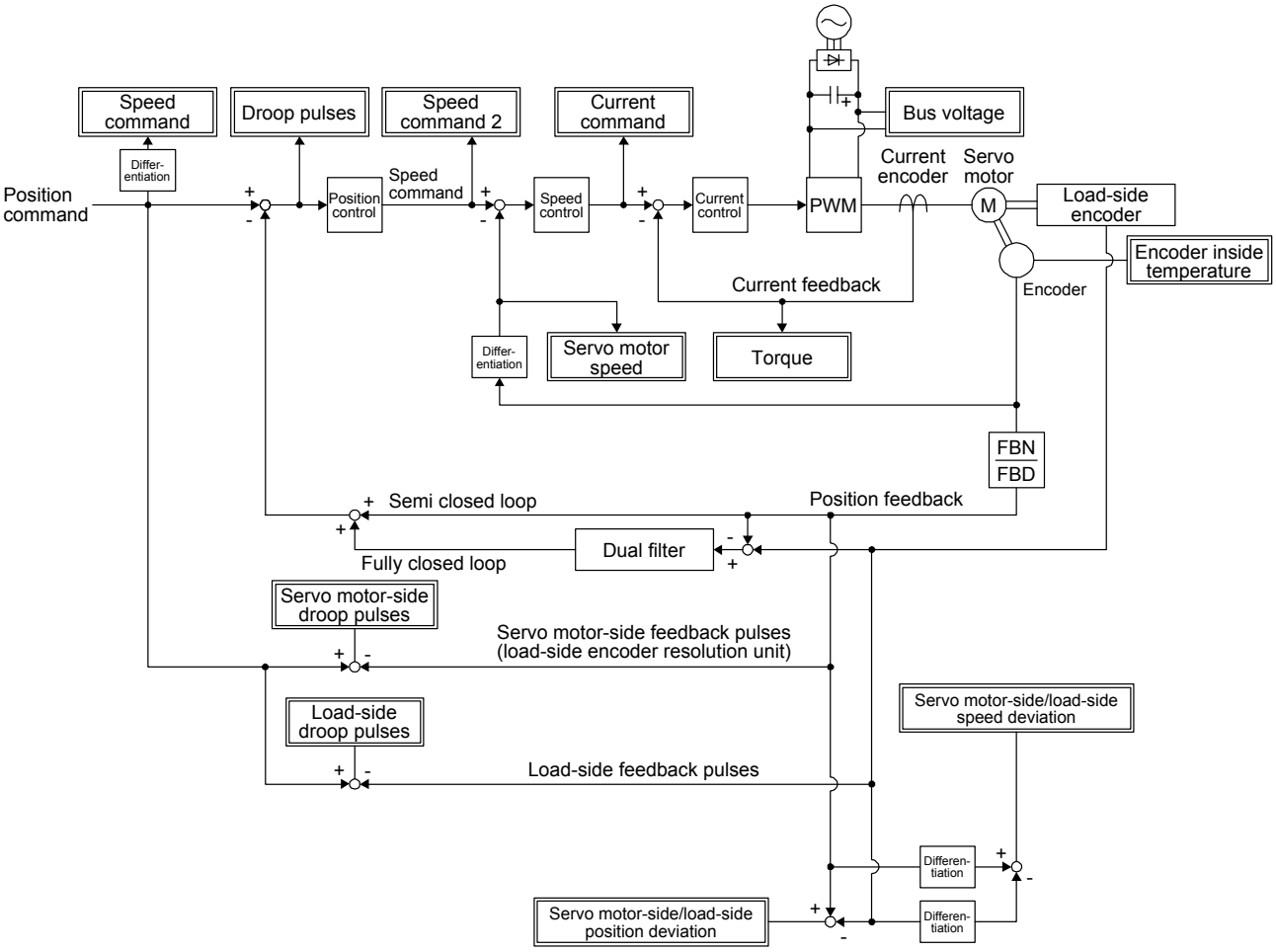

App. 11 Special specification

App. 11.1 Amplifiers without dynamic brake

App. 11.1.1 Summary

This section explains servo amplifiers without a dynamic brake. The things not explained in this section will be the same as MR-J4-_B_(-RJ).

App. 11.1.2 Model

The following describes what each block of a model name indicates. Not all combinations of the symbols are available.

MR－J4－60B4－ED

Series

Special specifications

Symbol	Special specifications
ED	MR-J4_-B_ without a dynamic brake
RU	MR-J4-_B_-RJ without a dynamic brake

Power supply

Symbol	Power supply
None	3-phase 200 V AC to 240 V AC
1	1-phase 100 V AC to 120 V AC
4	3-phase 380 V AC to 480 V AC

Rated output

Symbol	Rated output [kW]
10	0.1
20	0.2
40	0.4
60	0.6
70	0.75
100	1
200	2
350	3.5
500	5
700	7

App. 11.1.3 Specifications

Dynamic brake which is built in 7 kW or smaller servo amplifiers is removed.
Take safety measures such as making another circuit for an emergency stop, alarm occurrence, and power shut-off.
The following servo motors may function an electronic dynamic brake at an alarm occurrence.

Series	Servo motor
HG-KR	HG-KR053/HG-KR13/HG-KR23/HG-KR43
HG-MR	HG-MR053/HG-MR13/HG-MR23/HG-MR43
HG-SR	HG-SR51/HG-SR52

Setting the following parameter disables the electronic dynamic brake.

Servo amplifier	Parameter	Setting value
MR-J4-_B_-ED MR-J4-_B_-RU	[Pr. PF06]	_ _ _ 2

When [Pr. PA04] is "2 _ _ _" (default), the motor can be a state of forced stop deceleration at an alarm occurrence. Setting "0 _ _ _" in [Pr. PA04] disables the forced stop deceleration function.

App. 11.2 Without regenerative resistor

App. 11.2.1 Summary

This section explains servo amplifiers without a regenerative resistor. The things not explained in this section will be the same as MR-J4-_B_(-RJ).

App. 11.2.2 Model

The following describes what each block of a model name indicates. Not all combinations of the symbols are available.

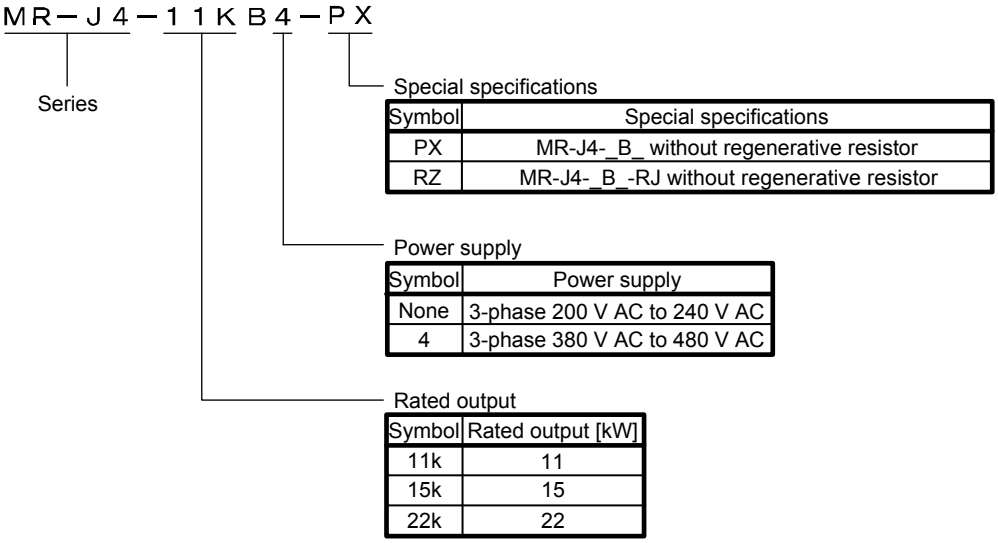

Symbol	Special specifications
PX	MR-J4-_B_ without regenerative resistor
RZ	MR-J4-_B_-RJ without regenerative resistor

Symbol	Power supply
None	3-phase 200 V AC to 240 V AC
4	3-phase 380 V AC to 480 V AC

Symbol	Rated output [kW]
11k	11
15k	15
22k	22

App. 11.2.3 Specifications

Indicates a servo amplifier of 11 kW to 22 kW that does not use a regenerative resistor as standard accessory. When using any of these servo amplifiers, always use the MR-RB5R, MR-RB9F, MR-RB9T, MR-RB5K-4, or MR-RB6K-4 regenerative option.

REVISION

*The manual number is given on the bottom left of the back cover.

Print Data	*Manual Number	Revision	
Mar. 2012	SH(NA)030106-A	First edition	
Jun. 2012	SH(NA)030106-B	4. Additional instructions (2) Wiring	The sentences are added.
		4. Additional instructions (3) Test run and adjustment	The sentences are added.
		COMPLIANCE WITH CE MARKING	The reference is changed.
		COMPLIANCE WITH UL/CSA STANDARD	The reference is changed.
		COMPLIANCE WITH KC MARK	Added.
		Section 1.2	The diagram is changed.
		Section 1.3	The table and Note are changed.
		Section 1.5	The sentences of the fully closed loop system and drive recorder are changed.
		Section 1.7.1	The diagram is changed.
		Chapter 2	CAUTION is changed.
		Section 2.5	POINT is changed to CAUTION.
		Section 2.6	The explanation of relay lifetime is changed.
		Chapter 3	The sentences are added to CAUTION.
		Section 3.1	The sentences are added to CAUTION. Note 12 is added.
		Section 3.1.1 (1)	Note 11 is added.
		Section 3.1.1 (2)	Note 11 is added.
		Section 3.1.1 (3)	Note 11 is added.
		Section 3.1.1 (4)	Note 11 is added.
		Section 3.2.1	Note 17 is added.
		Section 3.2.2	Note 17 is added.
		Section 3.3.1	The sentences of N- are changed.
		Section 3.3.3 (2) (a)	The ferrule is added.
		Section 3.5.2 (2)	The sentences of INP (In-position) are added. CLDS (During fully closed loop control) is added.
		Section 3.6.2 (1)	The sentences are added.
		Section 3.7.1 (3)	The sentences are added.
		Section 3.8.2 (1)	The sentences are changed.
		Section 3.8.2 (2)	The sentences are added.
		Section 3.8.3 (1)	The sentences are added.
		Section 3.8.3 (2)	The sentences are added.
		Section 3.10.2 (1) (a)	The sentences are changed.
		Section 4.1.2 (1) (b) 4)	Added.
		Section 4.3.3 (1)	The diagram is changed.
		Section 4.5.2 (1) (b)	Note is added. [AL. 20 Encoder normal communication error 1 (ABZ input)] in the table is deleted.
		Section 5.1	POINT is changed and Note is deleted.
		Section 5.1.1	PA25 is changed from "For manufacturer setting".
		Section 5.1.6	PF06 and PF12 are changed from "For manufacturer setting".
		Section 5.2.1	The sentences are added to PA01 and PA25 is added.
		Section 5.2.3	The sentences of PC01 are changed and sentences are added to PC03.
		Section 5.2.4	The table of PD07 is changed.
		Section 5.2.5	The sentences are added to PE08.
		Section 5.2.6	PF06 and PF12 are added.
		Chapter 6	The sentences in POINT are changed.
		Chapter 7	The sentences in POINT are changed.

Print Data	*Manual Number	Revision	
Jun. 2012	SH(NA)030106-B	Section 7.3.1	The sentences are added to POINT.
		Section 8.1	The column of the fully closed loop control is added. [AL. 1E.2], [AL. 1F.2], [AL. 42.8], [AL. 42.9], [AL. 42.A], [AL. 70], [AL. 71], [AL. 72], and [AL. E8.2] are added.
		Section 10.3	POINT is added.
		Section 10.3.2	The table is changed.
		Section 11.3	The sentences are changed.
		Section 11.4	The sentences are changed.
		Section 11.5	The sentences are changed.
		Section 11.5 (3)	The diagram is changed.
		Section 11.5 (4)	The connection destination of the servo amplifier is changed.
		Section 11.7 (1)	Note is changed.
		Chapter 12	The sentences are added to POINT.
		Section 13.1.5	The value in table is changed.
		Section 13.3.2 (1)	The diagram is changed.
		Section 13.3.2 (2)	Added.
		Section 13.3.3	The part of diagram is changed.
		Section 13.3.4	The part of diagram is changed.
		Section 13.4.1 (1)	The sentences are changed.
		Section 13.4.1 (2)	The sentences are added.
		Section 13.4.1 (2) (a)	Note is changed.
		Section 13.4.2 (1)	The sentences are added.
		Section 13.4.2 (2)	The sentences are added.
		Section 14.1.2	CAUTION is changed.
		Section 14.2	CAUTION is added.
		Section 14.3.1 (1)	The diagram is added.
		Section 14.3.1 (2)	"Set the linear servo motor series and linear servo motor type" is added.
		Section 14.3.2 (3) (a)	POINT and sentences are changed.
		Section 14.3.2 (3) (b)	POINT is changed.
		Section 14.4.4	The table is changed and the sentences are added. CAUTION is changed.
		Section 15.1.2	CAUTION is changed.
		Section 15.2	CAUTION is added.
		Section 15.3.2 (3) (a)	POINT and sentences are changed.
		Section 15.3.2 (3) (b)	POINT is changed.
		Section 15.4.3 (2)	The table is changed.
		Chapter 16	"Available in the future" is deleted. The sentences in POINT are changed.
		Section 16.1.1	The sentences of Note 2 are changed.
		Section 16.1.2 (1)	The part of diagram is changed.
		Section 16.3.1 (5)	The part of table is changed.
		Section 16.3.4 (3)	The part of table is changed.
		Appendix. 4	The sentences are changed.
		Appendix. 5	The sentences are changed.
		Appendix. 6	The sentences are changed.
		Appendix. 7.7.3 (1)	POINT and diagram are changed.
		Appendix. 7.7.3 (2)	The diagram is changed.
		Appendix. 7.7.3 (3)	Deleted.
		Appendix. 7.7.3 (4)	Deleted.
		Appendix. 7.8.1 (1)	The pin number is changed and Note is deleted.
		Appendix. 7.8.1 (2)	CAUTION is deleted.
		Appendix. 7.8.2	The sentences are changed.
		Appendix. 7.12	The diagram is added.
		Appendix. 7.14	POINT is changed.
		Appendix. 8	TUV certificate of MR-J4 series is added.

Print Data	*Manual Number	Revision	
Jun. 2012	SH(NA)030106-B	Appendix. 10.1	The diagram is changed.
		Appendix. 13	Added.
Sep. 2012	SH(NA)030106-C	Section 3.2.1	The diagram is changed.
		Section 3.2.2	The diagram is changed.
		Section 3.10.2 (1) (b)	The diagram is changed.
		Section 13.3.1	The sentences are changed.
		Section 13.4.1 (1)	The diagram is changed.
		Section 13.4.2 (1)	The diagram is changed.
Feb. 2013	SH(NA)030106-D	HG-JR, HG-UR, HG-RR servo motor, 11 kW to 22 kW servo amplifier, and MR-J4-_A-RJ servo amplifier are added.	
		Safety Instructions 4 (1)	Two items are added to CAUTION.
		Safety Instructions 4 (2)	The diagram in CAUTION is changed.
		COMPLIANCE WITH CE MARKING	The reference is changed.
		COMPLIANCE WITH UL/CSA STANDARD	The reference is changed.
		COMPLIANCE WITH KC MARK	The reference is changed.
		Section 1.1	The sentences and table of combination are added.
		Section 1.2	POINT is added.
		Section 1.2 (1)	CN2L, Note 5, and Note 6 are added.
		Section 1.2 (2)	CN2L, Note 3, and Note 4 are added.
		Section 1.2 (3)	Newly added.
		Section 1.3	The item is added to Safety performance. Note 9 and 11 kW to 22 kW are added. The content of Note 3 is changed.
		Section 1.4	POINT and function are added. The table of combination is changed.
		Section 1.5	Function item is added.
		Section 1.6 (2)	The content is added.
		Section 1.7.1 (1)	(18) to (20), and Note are added. The diagram is changed.
		Section 1.7.1 (1) to (4)	The diagram is changed.
		Section 1.7.1 (5), (6)	Newly added.
		Section 1.7.2	The sentences are added.
		Section 1.8 (1) to (4)	CN2L and Note 4 are added.
		Section 1.8 (5), (4)	Newly added.
		Chapter 2	Two items are added to CAUTION.
		Section 2.1 (1) (a), (b)	Note 1 and 2 are added.
		Section 2.4 (1) to (6)	Note 5 is added.
		Chapter 3	The diagram in CAUTION is changed.
		Section 3.1 (1) to (4)	The connection diagram is changed. Note 12 is added.
		Section 3.1 (5)	Newly added.
		Section 3.2.1	The connection diagram is changed. Note 10 is changed.
		Section 3.2.2	The connection diagram is changed.
		Section 3.3.1	The content of the table is changed.
		Section 3.3.2	POINT is added.
		Section 3.4	Note 1, 2, and CN2L are added. The connector explanation is deleted.
		Section 3.5.2 (2)	The content is changed.
		Section 3.6	POINT is added.
		Section 3.6.2	The sentences are changed.
		Section 3.6.3	The content is changed.
		Section 3.8	CN2L, Note 4, and Note 5 are added.
		Section 3.8.1	The connection diagram is changed. Note 5 is added.
		Section 3.10.1 (1)	The connection diagram is changed.
		Section 3.10.2 (1) (b)	Timing chart is changed.

Print Data	*Manual Number	Revision	
Feb. 2013	SH(NA)030106-D	Section 4.1.2 (1) (b) 5)	Newly added.
		Section 4.1.2 (1) (c) 1)	The sentences are changed.
		Section 4.1.2 (1) (c) 2)	The sentences are changed.
		Section 4.1.2 (1) (c) 4)	Newly added.
		Section 4.1.2 (5)	Newly added.
		Section 4.2 (5)	The content of the table is changed.
		Section 4.5.3 (3)	The content is changed.
		Chapter 5	CAUTION is added.
		Section 5.1.1	The name of [Pr. PA20] is changed. [Pr. PA22] and [Pr. PA26] are released. The content of [Pr. PC20] is changed.
		Section 5.1.4	The content of [Pr. PD12] is changed.
		Section 5.1.6	The name of [Pr. PF25] is changed.
		Section 5.2.1	The contents of [Pr. PA02] and [Pr. PA17] are changed. The name of [Pr. PA20] is changed. [Pr. PA22] and [Pr. PA26] are released.
		Section 5.2.3	The content of [Pr. PC20] is changed. The sentences are added to [Pr. PC04] and [Pr. PC05]. [Pr. PC26] is added. The contents are added to [Pr. PC03] and [Pr. PC27]. Note 2 is added to [Pr. PC09].
		Section 5.2.4	The contents are added to [Pr. PD01], [Pr. PD02], [Pr. PD07], [Pr. PD12], and [Pr. PD30].
		Section 5.2.5	[Pr. PE06] and [Pr. PE07] are changed.
		Section 5.2.6	The name of [Pr. PF25] is changed.
		Section 5.2.7	Note is added to [Pr. PL04].
		Section 6.2.2	The display of MR Configurator2 is changed.
		Section 6.2.2 (2)	POINT is added.
		Section 6.2.2 (5)	The sentences are added.
		Section 6.3.4	The content of the table is changed.
		Section 7.3.2	Newly added.
		Section 7.4	Newly added.
		Chapter 8	POINT is added.
		Section 8.1	The name of [AL. F0.1] is changed. [AL. 17.8] and Note 6 are added.
		Section 9.1	POINT is added.
		Section 9.1 (1) to (7)	The dimensions are changed.
		Section 9.1 (8), (9)	Newly added.
		Chapter 10	POINT is added.
		Section 10.1	The table of combination is added. The graph is changed and added. Note 3 is added.
		Section 10.2 (1)	The content of the table is changed. Note 3 is added.
		Section 10.3.1 (1)	The appended sentence is added.
		Section 10.3.1 (2)	The content is added.
		Section 10.3.2	Note 2 and content are added to the table.
		Section 10.5	The sentences are added. The content of the table is added.
		Chapter 11	POINT is added.
		Section 11.1.1	The diagram is changed and added.
		Section 11.2.1	The content of the table is added. Note 2 is added.
		Section 11.2.2 (1) (b)	The content and Note 2 are added.
		Section 11.2.3	[Pr. PA02] is changed.
		Section 11.2.4 (3), (4)	Newly added.
		Section 11.2.5 (5), (6)	Newly added.
		Section 11.3	POINT is added. The sentences are changed.
		Section 11.3.1	The content of the table, Note 1, and Note 2 are added.
		Section 11.3.3 (1) (a)	The connection diagram is changed. Note 12 is added.
		Section 11.3.3 (1) (b)	The connection diagram and Note 12 are changed. Note 14 is added.
		Section 11.3.3 (2)	The connection diagram is added.
		Section 11.3.3 (3), (4)	The content of the table is changed.
		Section 11.3.4 (1)	The dimensions are added.

Print Data	*Manual Number	Revision	
Feb. 2013	SH(NA)030106-D	Section 11.3.4 (2)	FR-BR-55K is added.
		Section 11.3.4 (3)	Newly added.
		Section 11.4 (1)	FR-RC-55K is added.
		Section 11.4 (2)	The connection diagram is changed. Note 9 is added.
		Section 11.4 (3), (4)	FR-RC-55K is added.
		Section 11.5 (3)	The connection diagram is changed. Note 8 is added.
		Section 11.5 (4)	The content is changed.
		Section 11.5 (6)	Note 2 is changed.
		Section 11.7	POINT is added.
		Section 11.7 (1)	Note 2 to Note 4 are added.
		Section 11.7 (2) (a)	Note 1 is changed.
		Section 11.9 (1)	The content and Note 5 are added.
		Section 11.9 (2)	The crimp terminal is added.
		Section 11.10 (1)	The contents for 11 kW to 22 kW are added.
		Section 11.10 (2)	The contents of molded-case circuit breaker and magnetic contactor are changed. Note 3 is added.
		Section 11.11	Power factor improving DC reactors for 11 kW to 22 kW are added.
		Section 11.12	Power factor improving AC reactor is added for 11 kW to 22 kW.
		Section 11.14 (2) (c)	The dimensions are changed.
		Section 11.15	11 kW to 22 kW are added. The content of the table is changed.
		Section 11.16	The EMC filters for 11 kW to 22 kW are added.
		Section 11.17	Newly added.
		Section 11.18	Newly added.
		Chapter 13	The names of overseas standards are unified.
		Section 13.2.2 (2)	The sentences are changed.
		Section 13.3.1	The connection diagram is changed.
		Section 13.4.1 (1)	The connection diagram is changed.
		Section 13.4.2 (1)	The connection diagram is changed.
		Section 14.1.1	The software version of MR Configurator2 is changed.
		Section 14.1.2 (2)	The connections of MR-J4-_B-RJ servo amplifiers are added.
		Section 14.2	The diagram in CAUTION is changed.
		Section 14.3.2 (1)	The sentences of Note are changed.
		Section 14.3.2 (5) (b) 3)	The sentences are changed.
		Section 14.3.3 (2)	The sentences are changed.
		Section 14.3.5 (2) (a)	The [Pr. PA01] setting value is changed.
		Section 14.4.2	The content of the table is changed.
		Section 14.4.4	The sentences are changed.
		Section 15.1.2	Note 7 is added.
		Section 15.2	The diagram of CAUTION is changed. The content of table is added.
		Section 15.3.2 (3) (b)	The content of POINT is changed.
		Section 15.3.3	The [Pr. PA01] setting value is changed.
		Section 15.3.4 (1) (a)	The sentences are partially changed.
		Chapter 16	The content of POINT is changed.
		Section 16.1.1	Note 2 is changed.
		Section 16.1.2 (1)	The content of the diagram is changed.
		Section 16.1.3 (1)	The composition is changed due to addition of MR-J4_B-RJ servo amplifier.
		Section 16.1.3 (2)	The composition is changed due to addition of MR-J4_B-RJ servo amplifier.
		Section 16.2.1	The sentences are added. The table is deleted. The content is changed.
		Section 16.2.1 (1), (2)	The connections of MR-J4-_B-RJ servo amplifiers are added.
		Section 16.2.2	The sentences are changed.
		Section 16.2.3 (1)	The composition is changed due to addition of MR-J4_B-RJ servo amplifier.

Print Data	*Manual Number	Revision	
Feb. 2013	SH(NA)030106-D	Section 16.2.3 (2)	The composition is changed due to addition of MR-J4_B-RJ servo amplifier.
		Section 16.3.1 (1)	The startup procedure is changed.
		Section 16.3.1 (3), (4)	Newly added.
		Section 16.3.1 (6)	The content of the table is added.
		Section 16.3.1 (7)	The [Pr. PE08] setting value is changed.
		Section 16.3.5	Newly added.
		Section 16.3.6	Newly added.
		Section 16.3.9 m)	The diagram of MR Configurator2 is changed. 3) and 5) are added.
		App. 4	Compliance with global standards is changed. App. 4 to 6 are combined.
		App. 5	The content is changed. Carried from App. 7.
		App. 6	Carried from App. 8.
		App. 7	Carried from App. 9.
		App. 8	Carried from App. 10.
		App. 9	Carried from App. 11.
		App. 10	Carried from App. 12. POINT is added.
		App. 10 (2)	Note 3 is deleted.
		App. 11	Carried from App. 13. POINT is added.
		App. 11.1	The sentences are changed.
		App. 11.3	Note 13 and 14 are added.
		App. 11.7 (5)	Newly added.
		App. 11.8	Newly added.
Aug. 2013	SH(NA)030106-E	The master-slave operation function, scale measurement function, and J3 compatibility mode are added.	
		Safety Instructions 4 (1)	A sentence is changed. An item is deleted.
		Safety Instructions 4 (2)	An item is added.
		Section 1.1	Table 1.1 is changed.
		Section 1.3	The scale measurement function is added. Note 10 is added.
		Section 1.5	The master-slave operation function, scale measurement function, and J3 compatibility mode are added.
		Section 1.6 (1)	The content is changed.
		Section 1.7.1 (1)	The table is changed. Note 2 is added and (9), (10), and (18) are changed.
		Chapter 2	A sentence is changed. An item is deleted.
		Section 3.1 (1) to (5)	Note 1 is changed.
		Section 3.4	Note 2 is changed.
		Section 3.8.1	Note 6 is added.
		Section 5.1.3	[Pr. PC26] and [Pr. PC27] are changed. Note is added.
		Section 5.1.4	[Pr. PD11], [Pr. PD15] to [Pr. PD17], [Pr. PD20], [Pr. PD30] to [Pr. PD32] are released. Note is added.
		Section 5.2.1	[Pr. PA14] is partly added. [Pr. PA22] is changed.
		Section 5.2.3	The table in [Pr. PC27] is changed.
		Section 5.2.4	[Pr. PD11], [Pr. PD15] to [Pr. PD17], [Pr. PD30] to [Pr. PD32] are released.
		Section 5.2.6	[Pr. PF23] is partly added.
		Section 7.1.5 (4)	POINT is deleted. Table is added.
		Section 7.4 (3)	Newly added.
		Section 8.1	[AL. 25.2], [AL. 3E.3], [AL. 3D] and [AL. 82] are added. [AL. 28], [AL. 2A], [AL. 3E], [AL. 70] to [AL. 72] are changed. Note 7 is added.
		Section 8.2	The display content is added.
		Section 9.1 (6) to (9)	A dimension is changed.
		Section 11.2.4 (3)	CAUTION is added.

Print Data	*Manual Number	Revision	
Aug. 2013	SH(NA)030106-E	Section 11.3.3 (1) (a)	Note 3 is changed.
		Section 11.3.3 (1) (b)	Note 3 is changed.
		Section 11.3.3 (2) (a)	Note 3 is changed.
		Section 11.4	POINT is added.
		Section 11.4 (2)	Note 4 is changed. Model of Power factor improving reactor is deleted. Note 4 is changed. Note 10 is added.
		Section 11.5 (5) (a)	The sentences are changed.
		Section 11.7 (2) (a)	The content is added.
		Section 11.7.3	Newly added.
		Section 11.10 (1)	Table and Note 3 are changed.
		Section 11.17 (2)	Note 7 is added.
		Section 14.1.2 (1)	Note 6 is added.
		Section 14.1.2 (2)	The content is changed.
		Section 14.1.2 (3)	Newly added.
		Section 15.3.2	POINT is added.
		Section 16.1.3 (2) (a)	Note is added.
		Section 16.1.3 (2) (b)	The diagram is changed.
		Chapter 17	Newly added.
		App. 4.2.1 (1)	The title is changed.
		App. 4.2.3 (4)	The sentences are added.
		App. 4.3	CAUTION is added.
Oct. 2013	SH(NA)030106-F	400 V class is added.	
		Safety Instructions 4 (1)	One item is added.
		About the manuals	The content of the table is added.
		Section 1.2 (1)	The diagram is changed.
		Section 1.2 (2)	Newly added.
		Section 1.3 (2)	Newly added.
		Section 1.4 (2)	Newly added.
		Section 1.5	The content of the table is added.
		Section 1.6 (2)	A combination is added.
		Section 1.7.1 (1) (a)	The content of the table is added. The diagram is changed.
		Section 1.7.1 (1) (b)	The diagram is changed.
		Section 1.7.1 (2)	Newly added.
		Section 1.7.1 (2) (a)	The content of the table is added.
		Section 1.8 (2)	Newly added.
		Section 3.1.2	Newly added.
		Section 3.3.1	The content of the 400 V class is added.
		Section 3.3.2 (2)	The content of Note 1 is changed. Note 2 is added.
		Section 3.3.3 (1) (c)	Newly added.
		Section 3.3.3 (2) (a)	The content of the table is added.
		Section 4.1.2 (1) (c) 2)	Newly added.
		Section 4.5.2 (1) (b)	The content of the table is changed.
		Section 5.1.4	The names of [Pr. PD16], [Pr. PD17], and [Pr. PD20] are changed.
		Section 5.1.5	[Pr. PE10] The content is changed.
		Section 5.1.6	[Pr. PF25] The name is changed.
		Section 5.2.1	A sentence is added to [Pr. PA01].
			[Pr. PA02] and [Pr. PA20] are changed.
			[Pr. PA17] The content is added.
			[Pr. PA26] The name is changed.
		Section 5.2.3	[Pr. PC09] The content is changed.
		Section 5.2.4	The names of [Pr. PD16], [Pr. PD17], and [Pr. PD20] are changed.
		Section 5.2.5	[Pr. PE10] The content is changed.
		Section 5.2.6	[Pr. PF25] The name is changed.
		Section 6.2	POINT is added.

Print Data	*Manual Number	Revision	
Oct. 2013	SH(NA)030106-F	Section 7.1.3	POINT is added.
		Section 7.3	The sentences are added.
		Section 7.3.1 (2)	The content of the table is changed.
		Section 7.3.2 (1)	Note is added.
		Section 7.3.2 (2) (a), (b)	The sentences are changed and note is added.
		Section 7.4 (2)	The title and content of the table are changed.
		Section 8.1	The POINT is added. The content of the table is changed. Note 4 of alarm table is changed. Note 7 is deleted. Note 2 of warning table is changed.
		Section 9.1 (1) (a) to (e)	The diagram is changed.
		Section 9.1 (2)	Newly added.
		Section 10.1	The content of the table is changed.
		Section 10.2 (1)	The content of the table is added.
		Section 10.3.1 (2) (b)	Newly added.
		Section 10.3.2 (2)	Newly added.
		Section 10.5	The content of the table is added.
		Section 11.1.1	The content of the table is added.
		Section 11.2.1 (2)	Newly added.
		Section 11.2.2 (1) (b)	The content of the table is added.
		Section 11.2.3	The content is added.
		Section 11.2.4	The content of POINT is changed.
		Section 11.2.4 (1) to (4)	The content is added.
		Section 11.2.5 (1), (3), (5)	The content is added.
		Section 11.2.5 (6)	Newly added.
		Section 11.2.5 (7)	The content is added.
		Section 11.3	POINT is added.
		Section 11.3.1	The content of the table is added. Note is added.
		Section 11.3.3 (1) (a) 2)	Newly added.
		Section 11.3.3 (1) (b)	POINT is added.
		Section 11.3.3 (2) (b)	Newly added.
		Section 11.3.3 (4)	The content of the table is added.
		Section 11.3.3 (5)	The content of the table is added.
		Section 11.3.4 (1) to (3)	The content is added.
		Section 11.4 (1)	The content of the table is added.
		Section 11.4 (2) (b)	Newly added.
		Section 11.4 (3), (4)	The content of the table is added.
		Section 11.5.1	The content is changed.
		Section 11.5.2 (2)	Newly added.
		Section 11.5.2 (3) (b)	Newly added.
		Section 11.5.2 (4) (a)	Newly added.
		Section 11.5.2 (4) (b)	Newly added.
		Section 11.5.2 (6)	The content is added.
		Section 11.8	POINT is added.
		Section 11.8.1	The content is changed.
		Section 11.8.2	Newly added.
		Section 11.9	The content of POINT is changed.
		Section 11.9 (1) (a)	Note 4 is changed.
		Section 11.9 (1) (b)	The content is added. The content of Note 4 is changed.
		Section 11.9 (2) (b)	The content is added.
		Section 11.10 (1), (2)	The content of the table is added. The content of Note 1 is changed.
		Section 11.11 (2)	Newly added.
		Section 11.12 (2)	Newly added.
		Section 11.14 (2) (e)	The content is added.
		Section 11.14 (2) (f)	The content is added.
		Section 11.15 (1)	The graph is added. The content of table 5 is added.

Print Data	*Manual Number	Revision	
Oct. 2013	SH(NA)030106-F	Section 11.16	The sentences are added.
		Section 11.16 (1)	The content of the table is added.
		Section 11.16 (2) (b)	Newly added.
		Section 11.16 (3) (a)	The content is added.
		Section 11.17	POINT is added.
		Section 11.17 (1)	The content of the table is added.
		Section 11.17 (2) (b)	Newly added.
		Section 11.17 (4) (b)	Newly added.
		Section 11.18	The content of the table is added.
		Chapter 12	Note is added. POINT is added. The content is changed. The configuration is changed.
		Section 14.1.2 (1) to (3)	The sentences are added.
		Section 14.4.1	The sentences are added.
		Section 14.4.2	The content of the table is added.
		Section 14.4.3	The content of the table is added.
		Section 16.1.1	The diagram is changed.
		Section 17.1.2	The sentences are changed.
		Section 17.1.3	The sentences are changed. The content of the table is changed. Note 15 is added.
		Section 17.2 (3)	The content of the table is changed.
		Section 17.3.1 (1)	The content of the table is changed.
		Section 17.3.2 (3) (b) 2)	The diagram is changed.
		App. 4.2.3 (1)	The sentences are added.
		App. 4.2.3 (1) (a)	The content of the table is changed.
		App. 4.2.3 (1) (a) 2)	Newly added.
		App. 4.2.3 (1) (b) 2)	Newly added.
		App. 4.2.3 (4)	The sentences are changed.
		App. 4.3	Note 2 is added.
		App. 4.4 (b)	Newly added.
		App. 4.6.1 (1) (b)	Newly added.
		App. 4.6.2	The content of the table is added. The contents of Note 1 and Note 2 are changed. Note 5 is added.
		App. 4.8.1 (2)	Newly added.
		App. 4.8.2	The content of the table is added.
		App. 4.8.3	The content of the table is added.
		App. 10 (2)	Note 7 is added.
Mar. 2014	SH(NA)030106-G	100 V class MR-J4 series servo amplifiers are added.	
		Section 1.2 (3)	Newly added.
		Section 1.3 (1)	Note 11 is added.
		Section 1.3 (3)	Newly added.
		Section 1.4 (3)	Newly added.
		Section 1.5	The content is added. Note is added.
		Section 1.6 (2)	The content is added.
		Section 1.7.1 (3)	Newly added.
		Section 1.8 (3)	Newly added.
		Chapter 2	POINT is changed.
		Section 3.1.3	Newly added.
		Section 3.3.1	The content is added.
		Section 3.3.3	The content of POINT is changed.
		Section 3.3.3 (1) (d)	Newly added.
		Section 3.3.3 (2) (a)	The content is added.
		Section 3.11	The content of the note is changed.
		Section 4.1.2 (1) (a) 2)	Newly added.
		Section 4.1.2 (1) (b) 5)	Deleted.
		Section 4.1.2 (1) (c) 3)	Newly added.
		Section 5.2.2	The sentences of [Pr. PB24] are added.
		Section 5.2.3	The content of [Pr. PC09] is added.
		Section 7.1.1 (1)	Caution for the table is changed.
		Section 7.2.3 (1)	The title is changed.
		Section 7.3.1 (2)	Caution for the table is changed.

Print Data	*Manual Number	Revision	
Mar. 2014	SH(NA)030106-G	Section 7.4	POINT is changed. Sentences are added.
		Section 7.4 (1)	Terms are changed.
		Chapter 8	The content of POINT is changed.
		Section 9.1 (3)	Newly added.
		Section 10.2 (1)	The content of the table is added.
		Section 10.3.2	Sentences are added. (1) and (2) are combined. Note 1 and 2 are deleted.
		Section 10.5	POINT is added. (2) and (3) are added.
		Section 11.1.1	Use of 1) in the table is changed.
		Section 11.2.1 (3)	Newly added.
		Section 11.2.2 (1) (b)	The content of the table is added.
		Section 11.2.5 (2), (3)	Table is added.
		Section 11.4 (2) (a)	Note 4 is changed.
		Section 11.4 (2) (b)	Note 4 is changed.
		Section 11.7.2 (1)	Note 1 is deleted.
		Section 11.9 (1) (c)	Newly added.
		Section 11.10 (1)	The content of the table is added.
		Section 11.10 (2)	The content of the table is added.
		Section 11.12 (1)	The title is changed. The diagram is added. The content of the table is changed.
		Section 11.14 (2) (e)	The content is added.
		Section 11.14 (2) (f)	The content is added.
		Section 11.15 (1)	Note is added. The content is added to table 11.6.
		Section 11.16 (1)	The content of the table is added.
		Section 11.16 (2) (a)	The title and content of the Note 1 are changed.
		App. 1	The content of the table is added.
		App. 4.2.3 (1) (a)	The sentences are changed.
		App. 4.2.3 (1) (a) 1)	The title is changed. The content of the table is changed.
		App. 4.2.3 (1) (a) 2)	The content of the table is changed.
		App. 4.2.3 (1) (b)	The sentences are changed.
		App. 4.2.3 (1) (b) 3)	Newly added.
		App. 4.4 (2)	Note 2 is added.
		App. 4.6.1 (1) (a)	The title is changed. The content of the table is changed.
		App. 4.8.1 (1)	The title is changed. The content of the table is changed.
		App. 4.8.2	The content of the table is changed.
		App. 11	Newly added.

Country/Region	Sales office	Tel/Fax
USA	MITSUBISHI ELECTRIC AUTOMATION, INC. 500 Corporate Woods Parkway, Vernon Hills, IL 60061, U.S.A.	Tel : +1-847-478-2100 Fax : +1-847-478-2253
Mexico	MITSUBISHI ELECTRIC AUTOMATION, INC. Mexico Branch Mariano Escobedo #69, Col.Zona Industrial, Tlalnepantla Edo, C.P.54030, México	Tel : +52-55-9171-7600 Fax : +52-55-9171-7649
Brazil	MITSUBISHI ELECTRIC DO BRASIL COMÉRCIO E SERVIÇOS LTDA. Rua Jussara, 1750- Bloco B Anexo, Jardim Santa Cecilia, CEP 06465-070, Barueri - SP, Brasil	Tel : +55-11-4689-3000 Fax : +55-11-4689-3016
Germany	MITSUBISHI ELECTRIC EUROPE B.V. German Branch Gothaer Strasse 8, D-40880 Ratingen, Germany	Tel : +49-2102-486-0 Fax : +49-2102-486-1120
UK	MITSUBISHI ELECTRIC EUROPE B.V. UK Branch Travellers Lane, Hatfield, Hertfordshire, AL10 8XB, U.K.	Tel : +44-1707-28-8780 Fax : +44-1707-27-8695
Italy	MITSUBISHI ELECTRIC EUROPE B.V. Italian Branch Centro Direzionale Colleoni - Palazzo Sirio Viale Colleoni 7, 20864 Agrate Brianza(Milano) Italy	Tel : +39-039-60531 Fax : +39-039-6053-312
Spain	MITSUBISHI ELECTRIC EUROPE, B.V. Spanish Branch Carretera de Rubí, 76-80-Apdo. 420, 08173 Sant Cugat del Vallés (Barcelona), Spain	Tel : +34-935-65-3131 Fax : +34-935-89-1579
France	MITSUBISHI ELECTRIC EUROPE B.V. French Branch 25, Boulevard des Bouvets, F-92741 Nanterre Cedex, France	Tel : +33-1-55-68-55-68 Fax : +33-1-55-68-57-57
Czech Republic	MITSUBISHI ELECTRIC EUROPE B.V. Czech Branch Avenir Business Park, Radlicka 751/113e, 158 00 Praha5, Czech Republic	Tel : +420-251-551-470 Fax : +420-251-551-471
Poland	MITSUBISHI ELECTRIC EUROPE B.V. Polish Branch ul. Krakowska 50, 32-083 Balice, Poland	Tel : +48-12-630-47-00 Fax : +48-12-630-47-01
Russia	MITSUBISHI ELECTRIC EUROPE B.V. Russian Branch St. Petersburg office Piskarevsky pr. 2, bld 2, lit "Sch", BC "Benua", office 720; RU-195027 St. Petersburg, Russia	Tel : +7-812-633-3497 Fax : +7-812-633-3499
Turkey	MITSUBISHI ELECTRIC TURKEY A.Ş Ümraniye Branch Şerifali Mahallesi Nutuk Sokak No:5 TR-34775 Ümraniye, İstanbul, Türkey	Tel : +90-216-526-3990 Fax : +90-216-526-3995
South Africa	ADROIT TECHNOLOGIES 20 Waterford Office Park, 189 Witkoppen Road, ZA-Fourways, South Africa	Tel : +27-11-658-8100 Fax : +27-11-658-8101
China	MITSUBISHI ELECTRIC AUTOMATION (CHINA) LTD. No.1386 Hongqiao Road, Mitsubishi Electric Automation Center, Changning District, Shanghai, China	Tel : +86-21-2322-3030 Fax : +86-21-2322-3000
Taiwan	SETSUYO ENTERPRISE CO., LTD. 6F, No.105, Wugong 3rd Road, Wugu District, New Taipei City 24889, Taiwan, R.O.C.	Tel : +886-2-2299-2499 Fax : +886-2-2299-2509
Korea	MITSUBISHI ELECTRIC AUTOMATION KOREA CO., LTD. 1480-6, Gayang-Dong, Gangseo-Gu, Seoul, 157-200, Korea	Tel : +82-2-3660-9510 Fax : +82-2-3664-8372/8335
Singapore	MITSUBISHI ELECTRIC ASIA PTE. LTD. 307, Alexandra Road, Mitsubishi Electric Building, Singapore 159943	Tel : +65-6473-2308 Fax : +65-6476-7439
Thailand	MITSUBISHI ELECTRIC FACTORY AUTOMATION (THAILAND) CO., LTD. 12th Floor, SV.City Building, Office Tower 1, No. 896/19 and 20 Rama 3 Road, Kwaeng Bangpongpang, Khet Yannawa, Bangkok 10120,Thailand	Tel : +66-2682-6522 to 6531 Fax : +66-2682-6020
Indonesia	PT. MITSUBISHI ELECTRIC INDONESIA Gedung Jaya 11th Floor, JL. MH. Thamrin No.12, Jakarta Pusat 10340, Indonesia	Tel : +62-21-3192-6461 Fax : +62-21-3192-3942
Vietnam	MITSUBISHI ELECTRIC VIETNAM COMPANY LIMITED Unit 01 - 04, 10th Floor, Vincom Center, 72 Le Thanh Ton Street, District 1, Ho Chi Minh City, Vietnam	Tel : +84-8-3910-5945 Fax : +84-8-3910-5947
India	MITSUBISHI ELECTRIC INDIA PVT. LTD. Pune Branch Emerald House, EL-3, J Block, M.I.D.C., Bhosari, Pune, 411026, Maharashtra State, India	Tel : +91-20-2710-2000 Fax : +91-20-2710-2100
Australia	MITSUBISHI ELECTRIC AUSTRALIA PTY. LTD. 348 Victoria Road, P.O. Box 11, Rydalmere, N.S.W 2116, Australia	Tel : +61-2-9684-7777 Fax : +61-2-9684-7245

Warranty

1. Warranty period and coverage

We will repair any failure or defect hereinafter referred to as "failure" in our FA equipment hereinafter referred to as the "Product" arisen during warranty period at no charge due to causes for which we are responsible through the distributor from which you purchased the Product or our service provider. However, we will charge the actual cost of dispatching our engineer for an on-site repair work on request by customer in Japan or overseas countries. We are not responsible for any on-site readjustment and/or trial run that may be required after a defective unit are repaired or replaced.

[Term]

The term of warranty for Product is twelve (12) months after your purchase or delivery of the Product to a place designated by you or eighteen (18) months from the date of manufacture whichever comes first ("Warranty Period"). Warranty period for repaired Product cannot exceed beyond the original warranty period before any repair work.

[Limitations]

(1) You are requested to conduct an initial failure diagnosis by yourself, as a general rule.
It can also be carried out by us or our service company upon your request and the actual cost will be charged. However, it will not be charged if we are responsible for the cause of the failure.

(2) This limited warranty applies only when the condition, method, environment, etc. of use are in compliance with the terms and conditions and instructions that are set forth in the instruction manual and user manual for the Product and the caution label affixed to the Product.

(3) Even during the term of warranty, the repair cost will be charged on you in the following cases;
(i) a failure caused by your improper storing or handling, carelessness or negligence, etc., and a failure caused by your hardware or software problem
(ii) a failure caused by any alteration, etc. to the Product made on your side without our approval
(iii) a failure which may be regarded as avoidable, if your equipment in which the Product is incorporated is equipped with a safety device required by applicable laws and has any function or structure considered to be indispensable according to a common sense in the industry
(iv) a failure which may be regarded as avoidable if consumable parts designated in the instruction manual, etc. are duly maintained and replaced
(v) any replacement of consumable parts (battery, fan, smoothing capacitor, etc.)
(vi) a failure caused by external factors such as inevitable accidents, including without limitation fire and abnormal fluctuation of voltage, and acts of God, including without limitation earthquake, lightning and natural disasters
(vii) a failure generated by an unforeseeable cause with a scientific technology that was not available at the time of the shipment of the Product from our company
(viii) any other failures which we are not responsible for or which you acknowledge we are not responsible for

2. Term of warranty after the stop of production

(1) We may accept the repair at charge for another seven (7) years after the production of the product is discontinued. The announcement of the stop of production for each model can be seen in our Sales and Service, etc.

(2) Please note that the Product (including its spare parts) cannot be ordered after its stop of production.

3. Service in overseas countries

Our regional FA Center in overseas countries will accept the repair work of the Product. However, the terms and conditions of the repair work may differ depending on each FA Center. Please ask your local FA center for details.

4. Exclusion of responsibility for compensation against loss of opportunity, secondary loss, etc.

Whether under or after the term of warranty, we assume no responsibility for any damages arisen from causes for which we are not responsible, any losses of opportunity and/or profit incurred by you due to a failure of the Product, any damages, secondary damages or compensation for accidents arisen under a specific circumstance that are foreseen or unforeseen by our company, any damages to products other than the Product, and also compensation for any replacement work, readjustment, start-up test run of local machines and the Product and any other operations conducted by you.

5. Change of Product specifications

Specifications listed in our catalogs, manuals or technical documents may be changed without notice.

6. Application and use of the Product

(1) For the use of our General-Purpose AC Servo, its applications should be those that may not result in a serious damage even if any failure or malfunction occurs in General-Purpose AC Servo, and a backup or fail-safe function should operate on an external system to General-Purpose AC Servo when any failure or malfunction occurs.

(2) Our General-Purpose AC Servo is designed and manufactured as a general purpose product for use at general industries.
Therefore, applications substantially influential on the public interest for such as atomic power plants and other power plants of electric power companies, and also which require a special quality assurance system, including applications for railway companies and government or public offices are not recommended, and we assume no responsibility for any failure caused by these applications when used
In addition, applications which may be substantially influential to human lives or properties for such as airlines, medical treatments, railway service, incineration and fuel systems, man-operated material handling equipment, entertainment machines, safety machines, etc. are not recommended, and we assume no responsibility for any failure caused by these applications when used.
We will review the acceptability of the abovementioned applications, if you agree not to require a specific quality for a specific application. Please contact us for consultation.

MODEL	MR-J4-B INSTRUCTIONMANUAL
MODEL CODE	1CW805

MITSUBISHI ELECTRIC CORPORATION

HEAD OFFICE : TOKYO BLDG MARUNOUCHI TOKYO 100-8310

SH (NA) 030106-G (1403) MEE Printed in Japan

This Instruction Manual uses recycled paper.
Specifications are subject to change without notice.